96768360

CONTROL DATA CORPORATION

CDC® CYBER 18 COMPUTER SYSTEMS WITH MOS MEMORY

CYBER 18-5M
CYBER 18-10M
CYBER 18-20
CYBER 18-25
CYBER 18-30

INSTALLATION MANUAL

96768360

CONTROL DATA CORPORATION

CDC® CYBER 18 COMPUTER SYSTEMS WITH MOS MEMORY

CYBER 18-5M
CYBER 18-10M
CYBER 18-20
CYBER 18-25
CYBER 18-30

INSTALLATION MANUAL

REVISION RECORD

REVISION	DESCRIPTION
A (8/77)	Manual released. This manual replaces publication number 39451500 for installation of CYBER 18 MOS memory systems and peripheral equipments.
B (10/77)	Manual revised; includes ECO DS014984, providing installation data for the card reader/line printer/communication line adapter controller.
C (2/78)	Manual revised; includes ECO DS021061, providing installation data for the cartridge disk drive and PE magnetic tape transport subsystems.
D (2/78)	Manual revised; includes ECO DS021074, providing installation data for the CYBER 18-5M Batch Terminal Controller.
E (4/78)	Manual revised; includes ECO DS021121, providing installation data for the synchronous data link control communication line adapter and buffered communication line adapter, and miscellaneous corrections.
F (10/78)	Manual revised; includes ECO DS021069, providing installation instructions for the paper tape/card punch subsystem and revised installation instructions for the flexible disk drive, communication multiplexer, and multiple subsystems.
G (10/78)	Manual revised; includes ECO DS021156, providing a UL-recognized power supply and installation data for power conversion units.
H (10/78)	Manual revised; includes ECO DS021169, providing a new CLA-to-modem cable assembly.
J (10/78)	Manual revised; includes ECO DS021226, providing memory expansion for the console display and correcting switch settings for the matrix printer.
K (10/78)	Manual revised; includes ECO DS021283, providing new CR/LP/CLA controller switch jumper configuration.
L (10/78)	Manual revised; includes ECO DS021281, providing a new buffered communication line adapter printed wiring assembly.
M (10/78)	Manual revised; includes ECO DS021298, providing new switch/jumper configurations for multiple controllers.
N (10/78)	Manual revised; includes ECO DS021371, providing basic operators panel installation instructions.
P (3/79)	Manual revised; includes ECO DS021345, clarifying card reader switch settings.
R (3/79)	Manual revised; includes ECO DS021348, clarifying dual-channel CLA, console display, and band printer switch settings.
S (3/79)	Manual revised; includes ECO DS021303, providing new matrix printer information and parts location.
T (6/79)	Manual revised; includes ECO DS021331, providing new CR/LP/CLA controller part numbers.
U (6/79)	Manual revised; includes ECO DS021487, providing miscellaneous changes and corrections throughout the manual.

Publication No.
96768360

REVISION LETTERS I, O, Q, S, X AND Z ARE NOT USED

© 1977, 1978, 1979, 1980, 1981, 1983, 1984, 1985
by Control Data Corporation
Printed in the United States of America

Address comments concerning this manual to:

Control Data Corporation
Technical Publications Department
2401 North Fairview Avenue
St. Paul, Minnesota 55113
or use Comment Sheet in the back of this manual.

REVISION RECORD (CONTD)

REVISION	DESCRIPTION
V	Manual revised; includes ECO DS021569, providing new line printer information and CR/LP controller and SDLC CLA
(11/79)	part numbers.
W	Manual revised; includes ECO DS021592, providing new backplane cabling information.
(11/79)	
Y	Manual revised; includes ECO DS021606, providing additional steps to ground flexible disk drive cables.
(11/79)	
Z	Manual revised; includes ECO DS021877, providing new module drive, CYBER 18-25 and 900 line printer information.
(3/80)	
AA	Manual revised; includes ECO DS021836, providing revised magnetic tape transport information.
(5/80)	
AB	Manual revised; includes ECO DS021888, providing changes to sections 1, 2, and 3 to reduce redundancies.
(8/80)	
AC	Manual revised; includes ECO DS021976, providing miscellaneous changes throughout the manual.
(11/80)	
AD	Manual revised; includes ECO DS022042, providing CC628 display terminal, CR/LP controller, CR/LP/CLA controller, and
(12/80)	I/O expansion information.
AE	Manual revised; includes ECO DS022097, providing the manual requirements for ECOs DS022036, DS022049, DS022054,
(6/81)	DS022074, and DS022083, improving the manual format. This edition obsoletes all previous editions.
AF	Manual revised; includes ECO DS022116, providing revised band line printer information and an FCC non-tested
(8/81)	warning label.
AG	Manual revised; includes ECO DS022132, providing CC628 display terminal switch setting information.
(10/81)	
AH	Manual revised; includes ECO DS022145, providing auto restart loader information.
(10/81)	
AJ	Manual revised; includes ECO DS022153, providing CR/LP/CLA paddleboard corrections.
(10/81)	
AK	Manual revised; includes ECO DS015601, providing revised information on customer built cable assemblies.
(12/81)	
AL	Manual revised; includes ECO DS022159, providing revised information on interrupt connections.
(12/81)	
AM	Manual revised; includes ECO DS022192, providing GB145-D module drive adapter information.
(2/83)	
AN	Manual revised; includes ECO DS022205, providing a new PE magnetic tape formatter power supply cable.
(2/83)	
AP	Manual revised; includes ECO DS022193, providing a new auto restart loader printed wiring assembly.
(2/83)	
AR	Manual revised; includes ECO DS022249, providing CC628 Display Terminal reference data.
(2/83)	
AT	Manual revised; includes ECO DS022210, providing module drive and line printer FCC EMI qualified cables.
(2/83)	
AU	Manual revised; includes ECO DS022245, providing a new band printer print band.
(2/83)	
AV	Manual revised; includes ECO DS022232, providing clarification of basic operator panel installation data.
(2/83)	
AW	Manual revised; includes ECO DS022244, providing a new SDLC CLA printed wiring assembly.
(2/83)	
AY	Manual revised; includes ECO DS022283, providing new modem and console display interface cables to meet FCC EMI
(5/83)	requirements.
BA	Manual revised; includes ECO DS022293, providing improved module drive cabinet signal cable grounding
(5/83)	termination facilities to maintain FCC EMI verification.
BB	Manual revised; includes ECO DS022303, providing correction in site planning kit for CYBER 18 application.
(10/83)	
BC	Manual revised; incorporates information on the CK130 (725-10) matrix printer.
(11/84)	

Publication No.
96768360

REVISION RECORD (CONTD)

REVISION	DESCRIPTION
BD (2/85)	Manual revised; includes ECO CD16903, providing part number change for SDLC CLA printed wiring assembly.

Publication No.

96768360

New features, as well as changes, deletions, and additions to information in this manual are indicated by bars in the margins or by a dot near the page number if the entire page is affected. A bar by the page number indicates pagination rather than content has changed.

PAGE	REV	PAGE	REV	PAGE	REV
Cover	-	14-2 thru 14-10	AE		
Title Page	-	15-1 thru 15-18	AE		
ii	BD	16-1 thru 16-8	AE		
ii-a/ii-b	BD	17-1 thru 17-8	AE		
iii/iv	BD	18-1	AU		
v/vi	AT	18-2 thru 18-12	AE		
vi-a	BC	18-13	AF		
vi-b thru vi-d	AT	19-1	AY		
vii	BA	19-2 thru 19-7	AK		
viii	AM	20-1 thru 20-6	AE		
ix	AE	21-1	AY		
x	AK	21-2/21-3	AJ		
xi	AE	21-4 thru 21-6	AE		
xii thru xvi	BC	21-7	AJ		
1-1 thru 1-8	AE	22-1 thru 22-17	AE		
1-9	BC	23-1 thru 23-7	AE		
1-10 thru 1-20	AE	23-8	AN		
1-21	AY	23-9 thru 23-22	AE		
2-1 thru 2-18	AE	23-23	AN		
3-1 thru 3-6	AE	23-24/23-25	AE		
4-1 thru 4-3	AE	24-1	BD		
5-1	AY	24-2 thru 24-14	AE		
5-2 thru 5-4	AE	25-1 thru 25-13	AE		
6-1	AY	26-1 thru 26-8	AE		
6-2 thru 6-7	AE	27-1 thru 27-5	AE		
7-1 thru 7-10	AE	28-1 thru 28-5	AE		
8-1	AT	29-1	AV		
8-2 thru 8-14	AE	29-2	AE		
9-1 thru 9-16	AE	30-1	AE		
10-1 thru 10-3	AT	30-2	AP		
10-4 thru 10-17	AE	30-3 thru 30-5	AE		
10-18	AL	30-6	AH		
10-19	BA	30-7 thru 30-10	AE		
10-20	BB	31-1	AR		
10-21 thru 10-41	AE	31-2	AG		
10-42	BA	31-3	AE		
10-43 thru 10-52	AE	32-1	AE		
10-53/10-54	AM	33-1/33-2	BC		
10-55/10-56	AE	Comment Sheet	BD		
11-1 thru 11-6	AE	Mailer	-		
12-1 thru 12-9	AE	Back Cover	-		
13-1	AE				
13-2	AK				
13-3 thru 13-6	AE				
14-1	AY				

PREFACE

This manual provides information for site installation of the Control Data® CYBER 18 Computer Systems containing metal-oxide semiconductor (MOS) main memory. The CYBER 18 MOS computer system consists of a micro processor and a number of peripheral devices such as card readers and line printers. The type of micro processor and the number of peripheral devices vary depending on system application.

The information in this manual is intended to aid the customer engineer in installing the computer system. In addition, instructions are included for on-site equipment and rack assembly. The installation of specific CYBER 18 MOS computer systems equipment is discussed in individual sections of this manual. Each section deals with the unpacking, inspection, assembly, and power-up of a specific equipment. These sections cover the installation of the equipments as if each were an individual installation.

For information on the functional characteristics of equipments that the CYBER 18 MOS computer systems may comprise, refer to the following list of applicable reference documents:

Equipment	Publication	Publication No.
Micro Processor Unit and Memory	AA132, AA133, AA153, DT120, FC402 CYBER 18 Computer Systems Central Processor Field Repair Guide	60475001
	AA132, AA133, AA153, AA155, GH447, GH461 CYBER 18 Equipment Cabinets Hardware Reference/Maintenance Manual	96768280
	AT241, AT275, BA212, DT223 MOS Memory Subsystem Hardware Reference/Maintenance Manual	96768600
	BA209, BA210, BS158 512-, 2048-, 8192-Instruction Micro Memory Hardware Reference/Maintenance Manual	96767900
	Basic Micro-Programmable Processor Hardware Reference/ Maintenance Manual	39451400
	CYBER 18 Computer Systems Site Planning Kit	96768510
	CYBER 18 Processor with MOS Memory Macro Level Hardware Reference Manual	96768300
	CYBER 18-5M Batch Terminal Computer System Hardware Maintenance Manual, Volumes 1 and 2	96768110 96768111
	DT120, DT195, FC402 Breakpoint Controller and Breakpoint Panel Hardware Reference/Maintenance Manual	96729000
	GD122-B, GD122-E, XA148-A Power Supply System Hardware Reference/Maintenance Manual	96729200
	Micro-Programmable Computer Family 1700 Enhanced Processor with Core Memory Hardware Reference Manual	88973500
	Micro-Programmable Computer Family Micro Processor Hardware Reference Manual	88973400
	Operational Diagnostic System (ODS) Version 2 Reference Manual	96768410

Equipment	Publication	Publication No.
Communication Line Adapter	CA150, CA153, CA154, CC555, CC628, CT104, FC109, FC539, FJ441, FJ442 Terminal Equipment Subsystem Field Repair Guide	60475070
	Communications Handbook	60405100
	DT610, DY221, FJ127, FJ128 Buffered Communication Line Adapter Field Repair Guide	60475130
	FC109, FC539 Card Reader/Line Printer/Communication Line Adapter Controller Hardware Reference/Maintenance Manual	60475830
	DT610, DY221, FJ127, FJ128 Buffered Communication Line Adapter Hardware Reference/Maintenance Manual	96768550
	FJ129, FJ448, FV678 Synchronous Data Link Control Communication Line Adapter Field Repair Guide	60475140
	FJ129, FJ448, FV678 Synchronous Data Link Control Communication Line Adapter Hardware Reference/ Maintenance Manual	96768440
	FJ441 Dual-Channel Communication Line Adapter Hardware Reference/Maintenance Manual	39452000
	FJ442 Eight-Channel Communication Line Adapter Hardware Reference/Maintenance Manual	96767920
Console Display	722-10 (CC628) Display Terminal Hardware Maintenance Manual (Site Information)	62940003
	722-10 (CC628) Display Terminal Operators Guide/ Installation Instructions	62940002
	722-10 (CC628) Display Terminal Reference Manual	62940001
	751-10 Terminal Subsystem Hardware Maintenance Manual	62962300
	751-10 Terminal Subsystem Operators Guide	62951400
	752 (CC555) Keyboard Display Terminal Hardware Maintenance Manual	62957400
	752 (CC555) Keyboard Display Terminal Operators Guide and Reference Manual	62957300
	Basic LIAT Display Logic Hardware Maintenance Manual	62961700
	CC555, CC628, CW212 Keyboard Display Terminal Subsystem Field Repair Guide	60475022
	CC614, CW212 Console Display Subsystem Hardware Field Repair Guide	60475021
Card Reader	CB104/105/106, CB202/203 Card Reader Hardware Reference/Maintenance Manual	49757900
	CB104, FC109, FC539, FH301 Card Reader Subsystem Field Repair Guide	60475031
	FC109, FC539 Card Reader/Line Printer/Communication Line Adapter Controller Hardware Reference/Maintenance Manual	60475830
	FH301 Card Reader/Line Printer Controller Hardware Reference/Maintenance Manual	96728800

Equipment	Publication	Publication No.
Line Printer	CL408, CL411, FC109, FC539, FH301 Line Printer Subsystem Field Repair Guide	60475032
	CL411 Line Printer Field Service Manual, Volume 1	91858400
	CL411 Line Printer Field Service Manual, Volume 2	91858500
	CL411 Line Printer Parts Identification Manual	91859100
	CL411 Line Printer Reference Manual	59709100
	CT103, CT105, CT106, FC109, FC539, FH301 Line Printer Subsystem Field Repair Guide	60475033
	CT103, CT105 Line Printer Equipment Parts Identification Manual	95445067
	CT103-A/B, CT105-A/B, CT106-A Line Printer Equipment Field Service Manual	44677818
	CT103-A/B, CT105-A/B, CT106-A Line Printer Equipment Preparation and Instruction Manual	44677817
	CT103/CT105 Line Printer Equipment Reference/ Field Service Manual	95445060
	CT104-A Matrix Printer Field Service and Reference Manual	95445028
	CK130 Matrix Printer Operator Installation and Reference Manual	15051290
	CT106 Line Printer Equipment Parts Identification Manual	95445050
	CT106 Line Printer Equipment Reference/Field Services Manual	95445055
	FC109, FC539 Card Reader/Line Printer/Communication Line Adapter Controller Hardware Reference/Maintenance Manual	60475830
	Line Printer Equipment Field Service Manual	95445003
Magnetic Tape Transport	BW101, BW303, BW812, FA107 Magnetic Tape Transport (NRZI) Subsystem Field Repair Guide	60475041
	BW101/301/302/303/304/305 Magnetic Tape Transport Field Service Manual	49756400
	BW101/301/302/303/304/305 Magnetic Tape Transport Parts Identification Manual	49756500
	BW101/301/302/303/304/305 Magnetic Tape Transport Reference Manual	49756300
	BW305, DZ101, FA464, FA465 Magnetic Tape Transport (NRZI/PE) Dual Mode, Subsystem Field Repair Guide	60475042
	DZ101-A Magnetic Tape Formatter Field Service/ Reference Manual	49760400
	FA107 Magnetic Tape Controller (NRZI) Hardware Reference/ Maintenance Manual	96728600
	FA464, FA465 Magnetic Tape Transport Controller Hardware Reference/Maintenance Manual	60476010

Equipment	Publication	Publication No.
Module Drive	BJ402, BJ701, BZ403, FA727, GB138, GB145 Module Drive Subsystem Field Repair Guide	60475051
	BJ4M1, BJ4M2 Storage Module Drive Hardware Maintenance Manual	83322450
	BJ4M1, BJ4M2 Storage Module Drive Hardware Reference Manual	83322460
	BJ701, BJ7B1 Storage Module Drive Hardware Maintenance Manual	83311300
	BJ701, BJ7B1 Storage Module Drive Hardware Reference Manual	83317300
	BZ3OX, BZ4OX, BZ3MX, BZ4MX Mini-Module Drive Hardware Maintenance Manual	83322820
	BZ3OX, BZ4OX, BZ3MX, BZ4MX Mini-Module Drive Hardware Reference Manual	83322440
	FA727, FA748 Storage Module Drive Controller/Formatter Hardware Maintenance Manual	83312400
	GB138 Storage Module Drive Interface Hardware Reference/Maintenance Manual	96761300
	GB145 Module Drive Adapter Hardware Reference/ Maintenance Manual	60475800
Tape Cassette	FA104-A Tape Cassette Controller Hardware Reference/ Maintenance Manual	96711900
	FA104, BE602 Tape Cassette Subsystem Hardware Maintenance Manual	60475060
Flexible Disk Drive	BR803, GD130, GD308, FA730 Flexible Disk Drive Subsystem Field Repair Guide	60475010
	FA730 Flexible Disk Drive Controller Hardware Reference/ Maintenance Manual	96768800
	Flexible Disk Drive Hardware Maintenance Manual	77834769
Communication Expansion	DY192, DY198 CYBER 18-25/30 Communication Multiplexer Subsystem Field Repair Guide	96768610
	DY192, DY198, GH447, GH461 Communication Multiplexer Subsystem Hardware Maintenance Manual	60475080
1500 Series Equipment Adapter	AT352 CYBER 18/1500 Series Adapter Hardware Reference/ Maintenance Manual	96768320
Cartridge Disk Drive	9427-H Cartridge Disk Drive Hardware Maintenance Manual	77834675
	BR704, FA111, FA750 Cartridge Disk Drive Subsystem Hardware Maintenance Manual	60475052
	FA111, FA750 Cartridge Disk Drive Controller Hardware Reference/Maintenance Manual	60476000
Paper Tape Equipment	DK609, DL103, FE308, FE516 Paper Tape Subsystem Hardware Maintenance Manual	60475810
	FE308, FE516, DK609, DL103 Paper Tape Reader/Paper Tape Punch/Card Punch Controller and Paper Tape Relay Station Hardware Reference/Maintenance Manual	60475820

Equipment	Publication	Publication No.
Auto Restart Loader	FV679, FV701 Auto Restart Loader Hardware Reference/Maintenance Manual	96768330
	FV679, FV701 Auto Restart Loader Subsystem Field Repair Guide	60475120
I/O Expansion Subsystem	AT314, AU115, BU272, CW218 I/O Expansion Subsystem Hardware Reference/Maintenance Manual	60475540

CONTENTS

1 INTRODUCTION 1-1

System Description 1-1
Configuration 1-1
CYBER 18-5M Batch Terminal 1-1
CYBER 18-10M 1-5
CYBER 18-20 1-5
CYBER 18-25 1-5
CYBER 18-30 1-5
System Expansion 1-13
Peripheral Equipment 1-13
Printed Wiring Assembly Assignment 1-13
Printed Wiring Assembly Standard Slot Assignment 1-13
Backplane Connecting Information 1-13
Equipment and Interrupt Number Assignments 1-13
Power Requirements 1-16
Equipment Weight 1-16
Operating Environment 1-16
Installation Tools 1-16
Test Equipment 1-16
Shipping Damage Inspection 1-16
Protective Grounding System 1-16
EMC Grounding Systems 1-16
Special Handling of Electrostatic-Sensitive Printed Wiring Assemblies 1-20
Special Handling of MOS Memory Array Printed Wiring Assemblies 1-20
FCC EMI Verification 1-21

2 PROCESSOR UNIT 2-1

Parts and Equipment 2-1
Processor and Desk Console 2-1
Uncrating 2-1
Assembly 2-2
Crating 2-2
Power Requirements 2-2
Power Cabling 2-2
Signal Cabling 2-2
Switch/Jumper Verification 2-2
Memory Interface Board 2-6
I/O-TTY Controller 2-6
Transform Board 2-13
Read/Write Micro-Memory Installation Configuration 2-13
Placement of Product and Equipment Labels 2-13
Power-On and Voltage Testing Procedures 2-13
Diagnostic Testing 2-18

3 MOS MEMORY AND MICRO MEMORY MODULES 3-1

Parts and Equipment 3-1
Uncrating 3-1
Crating 3-1
MOS Memory 3-2
Installation or Replacement 3-2
Expansion 3-3
Micro-Memory Board Installation 3-3
512-Instruction Micro-Memory Board (One Page) 3-4
2048-Instruction Micro-Memory Board (Four Page) 3-4

4 SYSTEM POWER CONVERSION TRANSFORMER 4-1

Parts and Equipment 4-1
Tools Required 4-2
Uncrating 4-2
Crating 4-2
Mechanical Installation 4-2
Power Installation 4-2
Transformer 4-2
System 4-3

5 DUAL-CHANNEL COMMUNICATION LINE ADAPTER 5-1

Parts and Equipment 5-1
Test Equipment 5-1
Uncrating 5-1
Crating 5-1
Inspection 5-1
Power Requirements 5-1
Signal Cabling 5-1
Switch/Jumper Verification 5-1
Equipment/Station/Protect Select 5-1
Baud Rate/DTR/RTS Select 5-1
Controller Board Installation 5-4
Diagnostic Testing 5-4

6 CONSOLE DISPLAY (CC614) 6-1

Parts and Equipment 6-1
Test Equipment 6-1
Uncrating 6-1
Crating 6-1
Inspection 6-1
Power Requirements 6-1
Power Cabling 6-1
Signal Cabling 6-1
CYBER 18-5M/10M/20 6-2
CYBER 18-25 and 18-30 6-2
Switch/Jumper Verification 6-2
Internal Switches 6-2
External Switches 6-5
I/O-TTY Controller Baud Rate Select Switches 6-5
Offline Testing 6-6
Diagnostic Testing 6-7

7 CARD READER 7-1

Parts and Equipment 7-1
Test Equipment 7-2
Uncrating 7-2
Crating 7-2
Inspection 7-2
Power Requirements 7-2
Power Cabling 7-2
Signal Cabling 7-2
Offline Testing 7-2
Switch/Jumper Verification 7-5
Card Reader 7-5
Card Reader Controller 7-5
Diagnostic Testing 7-5

8 DRUM LINE PRINTER 8-1

Parts and Equipment 8-1
Tools Required 8-1
Uncrating 8-1
Wooden Container (Air Shipment) 8-1
Corrugated Container (Van Shipment) 8-1
Crating
8-2
Inspection 8-3
Installation 8-3
Leveling 8-3
Preliminary Particle Unit Checks 8-3
Power Requirements 8-4
Power Cabling 8-4
Signal Cabling 8-4
Switch/Jumper Verification 8-4
Equipment Jumpers 8-4
Interrupt Jumpers 8-4
Protect Jumpers 8-4
Parity Jumpers 8-4
Line Printer Switch Settings 8-4
Power-On Circuit Breaker 8-4
Line-Per-Inch Select 8-4
Form Formatting Options 8-9
Printer Circuit Board Switches 8-10
Format Tape Preparation 8-11
Format Tape Installation 8-12
Ribbon Installation 8-13
Forms Installation and Alignment 8-13
Diagnostic Testing 8-14

9 NRZI MAGNETIC TAPE SUBSYSTEM 9-1

Magnetic Tape Transport 9-1
Parts and Equipment 9-1
Test Equipment 9-2
Uncrating 9-2
Crating 9-2
Power Requirements 9-3
Power Cabling 9-3
Signal Cabling 9-3
Magnetic Tape Transport 9-3
Magnetic Tape Controller 9-5
Diagnostic Testing 9-5
Magnetic Tape Transport Drive 9-5
Parts and Equipment 9-6
Tools Required 9-8
Uncrating 9-8
Equipment Cabinet 9-8
Magnetic Tape Transport 9-8
Installation 9-9
Cabinet Preparation 9-9
Magnetic Tape Transport Preparation 9-12
Magnetic Tape Transport Attachment 9-14
EMI Bracket Attachemnt 9-14
Final Preparation 9-15
Translator Board 9-15

10 MODULE DRIVE SUBSYSTEM 10-1

Parts and Equipment 10-1
Tools Required 10-3
Power Requirements 10-3
Site Electrical Requirements 10-3
AC Power Connections 10-3
BJ402 and BJ701 Module Drive 10-5
Uncrating 10-5
BJ402 Unit 10-5
BJ701 Unit 10-5
Control Unit 10-10
Drive Installation Preparation 10-11
Module Drives 10-11
Control Unit Installation 10-11
Cabinet Preparation 10-12
Controller Mounting 10-14
Power Checks 10-16
Signal Cabling 10-17
Signal Cable Installation 10-18
Module Drive Sector Plug 10-18
Module Drive Grounding 10-18
Site Power System Safety Ground 10-18
System Ground 10-18
I/O Cables 10-18
Installation 10-22
Preinstallation Inspection 10-22
Grounding 10-22
Drive-to-Floor Grid Grounding 10-22
Power Cable Routing 10-25
I/O Cable Installation 10-25
Initial Checkout and Startup 10-27
Diagnostic Testing 10-29
BZ403 Mini-Module Drive 10-29
Unpackaging 10-30
Inspection 10-31
Installation 10-31
Mounting Rack 10-31
System Grounding 10-37
System Cabling 10-39
Switch Settings 10-43
Logical Address and Sector Selection 10-43
Sector Select Switches 10-45
Write Protect Switch 10-47
Local/Remote Switch 10-47
Logical Unit Select Switches 10-47
Max Head Switches 10-48
Device ID Switches 10-48
Device Capacity Switches 10-48
Checkout 10-48
Visual Inspection and Verification 10-48
Initial Start-Up 10-49
Electrical Checks 10-49
Diagnostics 10-49
Module Drive Interface and Adapter 10-49
Uncrating 10-49
Inspection 10-50
Jumpers 10-50
GB138-A Module Drive Interface Jumpers 10-50
GB145 Module Drive Adapter 10-53
PWA Installation 10-56

11 TAPE CASSETTE TRANSPORT 11-1

Parts and Equipment 11-1
Test Equipment 11-1
Uncrating 11-1
Crating 11-1
Inspection 11-1
Power Requirements 11-1
Power Supply Installation 11-1
Power Cable 11-1
Power Supply 11-3
Testing 11-3
Tape Transport Installation 11-5
Single Tape Transport 11-5
Dual Tape Transport 11-5
Signal Cabling 11-5
Tape Cassette Controller Installation 11-5
Switch Verification 11-5
Controller Insertion 11-5
Diagnostic Testing 11-5

Power Cabling 23-23
Jumper Verification 23-25
Label Attachment 23-25
Diagnostic Testing 23-25

24 SYNCHRONOUS DATA LINK CONTROL COMMUNICATION LINE ADAPTER 24-1

Parts and Equipment 24-1
Tools and Test Equipment 24-1
Uncrating 24-1
Crating 24-1
Inspection 24-3
Power Requirements 24-3
CPU Backplane Wiring 24-3
Interrupt Jumpers 24-3
Interrupt to Processor 24-3
Multiple SDLC CLAs 24-3
Signal Cabling 24-3
Modem Cables 24-4
ACU Cable 24-4
Local Link Coupler 24-6
External Device Cabling 24-7
I/O Connector Panel and Overhead Cable Support Bar Installation 24-7
I/O Connector Panel 24-7
Overhead Cable Support Bar 24-7
Modem/ACU Cabling 24-7
Multidrop Network Cabling 24-7
Switch/Jumper Verification 24-7
Secondary Address Selection 24-10
W-Field Address 24-10
Processing Mode 24-11
Idle Character 24-11
Equipment Code Select 24-11
Cable Connection Selection 24-13
Software Enable 24-13
Stall Timer 24-13
Solder Jumpers 24-13
20-Bit Address Backplane 24-13
Data Transfer Rate Selection 24-13
PWA Insertion 24-13
Diagnostic Testing 24-14

25 BUFFERED COMMUNICATION LINE ADAPTER 25-1

Parts and Equipment 25-1
Tools and Test Equipment 25-1
Uncrating 25-1
Crating 25-1
Inspection 25-1
Power Requirements 25-2
Signal Cabling 25-2
I/O Connector Panel 25-2
Overhead Cable Support Bar 25-2
Primary BCLA Signal Cabling 25-2
Expansion BCLA Signal Cabling 25-2
Current Loop Adapters 25-7
Power Supply Cabling 25-7
Current Loop Adapter 25-8
External Device Cabling 25-9
Switch/Jumper Verification 25-9
W-Field Number Select 25-9
Equipment Number Jumpers 25-10
No Stop On Error Option 25-10
20-Bit Address Backplane 25-10
Spare Jumpers 25-10
Interrupt Wiring 25-12
PWA Insertion 25-12
Diagnostic Testing 25-13

26 PAPER TAPE READER/PAPER TAPE PUNCH/CARD PUNCH SUBSYSTEM 26-1

Parts and Equipment 26-1
Test Equipment 26-1
Uncrating 26-2
Crating 26-2
Inspection 26-2
Primary Power Preparation 26-2
Wiring/Jumper Verification 26-3
Controller Jumpers 26-3
Backplane Wiring 26-3
Paper Tape Punch 26-3
Installation 26-4
Paper Tape Devices 26-4
Card Punch 26-4
Controller Insertion 26-4
Signal Cabling 26-4
Power Cabling 26-4
Power Application and Preliminary Checkout 26-4
Paper Tape Punch 26-4
Paper Tape Reader 26-6
Paper Tape Relay Station 26-6
Card Punch 26-6
Offline Testing 26-6
Diagnostic Testing 26-7

27 PROCESSOR POWER CONVERSION UNIT 27-1

Parts and Equipment 27-1
Tools and Equipment 27-1
Uncrating 27-1
Crating 27-1
Installation 27-1
Diagnostic Testing 27-5

28 MAGNETIC TAPE TRANSPORT POWER CONVERSION UNIT 28-1

Parts and Equipment 28-1
Tools and Equipment 28-1
Uncrating 28-1
Crating 28-1
Installation 28-1
Diagnostic Testing 28-5

29 BASIC OPERATORS PANEL 29-1

Parts and Equipment 29-1
Test Equipment and Tools 29-1
Uncrating 29-1
Crating 29-1
Inspection 29-1
Power Requirements 29-1
Power Cabling 29-1
Signal Cabling 29-2
Switch/Jumper Verification 29-2
Diagnostic Testing 29-2

30 AUTO RESTART LOADER 30-1

Parts and Equipment 30-2
Tools and Test Equipment 30-2
Uncrating 30-2
Crating 30-2
Inspection 30-2
Power Requirements 30-2
CPU Backplane Wiring 30-2
Switch/Jumper Verification 30-3

Equipment Code Selection 30-3
Load Starting Address 30-4
PWA Jumpers 30-5
Deadstart Data PROMs 30-5
PWA Insertion 30-5
Paddle Board Installation 30-5
Paddle Board Jumpers 30-6
Stall Alarm Panel 30-6
Digital I/O Devices 30-10
Diagnostic Testing 30-10

31 DISPLAY TERMINAL (CC628) 31-1

Power Cabling 31-1
Signal Cabling 31-1
Switch/Jumper Verification 31-1
Internal Controls 31-1
External Controls 31-1
I/O-TTY Controller Baud Rate Select Switches 31-1
Diagnostic Testing 31-1

32 I/O EXPANSION SUBSYSTEM 32-1

General 32-1

33 CK130 MATRIX PRINTER 33-1

Parts and Equipment 33-1
Tools and Equipment 33-1
Unpacking and Inspection 33-1
Signal Cabling and Switch Settings 33-1
Eight-Channel Communication Line Adapter 33-1
Keyboard Display Terminal Slave Peripheral 33-1
Diagnostic Testing 33-1
Direct Connection to Communication Line Adapter 33-2
Connection to Communication Line Adapter via Display Terminal 33-2
Connection to Operator's Console 33-2

FIGURES

1-1 Typical CYBER 18-5M Batch Terminal Configuration 1-1
1-2 Typical CYBER 18-10M Configuration 1-2
1-3 Typical CYBER 18-20 Configuration 1-2
1-4 Typical CYBER 18-25 Configuration 1-3
1-5 Typical CYBER 18-30 Configuration 1-3
1-6 CYBER 18-5M Batch Terminal PWA Slot Assignment 1-4
1-7 CYBER 18-10M PWA Slot Assignment 1-6
1-8 CYBER 18-20 PWA Slot Assignment 1-10
1-9 CYBER 18-25 PWA Slot Assignment 1-11
1-10 CYBER 18-30 PWA Slot Assignment 1-14
1-11 Processor Backplane Slot Description and Pin Assignment 1-16
2-1 Typical CYBER 18 Processor Uncrating Diagram 2-1
2-2 AV102 Table Top Installation 2-3
2-3 CYBER 18 Chassis Configuration with Scott Power Supply Installation 2-4
2-4 CYBER 18 Chassis Configuration with LH Power Supply 2-5
2-5 Typical CYBER 18 Single Processor System 2-6
2-6 Typical CYBER 18 Dual Processor System Cabling Diagram 2-7
2-7 Typical CYBER 18-5M Backplane Cabling Diagram 2-8
2-8 Typical CYBER 18-10M Backplane Cabling Diagram 2-9
2-9 Typical CYBER 18-20 Backplane Cabling Diagram 2-10
2-10 Typical CYBER 18-25 Backplane Cabling Diagram 2-11
2-11 Typical CYBER 18-30 Backplane Cabling Diagram 2-12
2-12 I/O-TTY Controller Board Switches 2-13
2-13 Transform Board Jumper 2-14
3-1 MOS Memory and Micro Memory Block Diagram 3-1
3-2 Memory Interface Address Board Switches 3-2
3-3 512-Instruction Micro Memory Page Select Switches 3-5
3-4 2048-Instruction Micro-Memory Page Select Switches 3-6
4-1 Power Conversion Transformer Crating Diagram 4-2
4-2 Power Conversion Transformer Physical Characteristics 4-2
4-3 Power Conversion Transformer Terminal Identification 4-3
4-4 Typical 220 V, 50 Hz Power Hookup 4-3
5-1 CYBER 18 Dual-Channel Communication Line Adapter Modem Cable Installation 5-2
5-2 Dual-Channel Communication Line Adapter Equipment, Station Select, and Protect Switch Settings 5-3
5-3 Dual-Channel Communication Line Adapter Baud Rate Select and Data Terminal Ready Switches 5-4
6-1 Console Display Physical Configuration 6-2
6-2 CYBER 18 Console Display Signal and Power Cable Connections 6-3
6-3 Console Display Parity and Baud Rate Switch Settings 6-4
6-4 Console Display Special Function Switches 6-5
6-5 Console Display Control Panel Switch Settings 6-6
6-6 I/O-TTY Controller Board Baud Rate Select 6-7
7-1 Card Reader Block Diagram 7-1
7-2 Card Reader Inspection 7-2
7-3 CYBER 18 Card Reader Signal and Power Cable Connections 7-3
7-4 Card Reader Feature Switches 7-4
7-5 Card Reader Function and Interface Switches 7-7
7-6 Card Reader/Line Printer Controller Interface Board Equipment Jumpers 7-8
7-7 Card Reader/Line Printer Controller Interface Board Interrupt Jumpers 7-9
7-8 Card Reader/Line Printer Controller Interface Board Protect Jumpers 7-10
8-1 Printer Uncrating 8-2
8-2 Line Printer Caster 8-3
8-3 Line Printer Installation Leveling 8-3

8-4 Freeing the Particle Unit 8-4
8-5 CYBER 18 Line Printer Signal and Power Cable Connections 8-5
8-6 Card Reader/Line Printer Controller Equipment Jumpers 8-6
8-7 Card Reader/Line Printer Controller Interrupt Jumpers 8-7
8-8 Card Reader/Line Printer Controller Protect Jumpers 8-8
8-9 Card Reader/Line Printer Controller Parity Jumpers 8-8
8-10 Drum Gate Assembly 8-9
8-11 Vertical Forms Drive Assembly 8-10
8-12 Format Tape Hole Tolerances 8-11
8-13 Format Tape Reference Marks 8-11
8-14 Format Tape Levels 8-12
8-15 Format Tape Splicing 8-13
8-16 Format Tape Installation 8-13
8-17 Ribbon Installation 8-14
8-18 Print Forms Positioning 8-14
9-1 Magnetic Tape Transport Subsystem Block Diagram 9-1
9-2 Magnetic Tape Transport System Maximum Configuration 9-2
9-3 Magnetic Tape Transport and Cabinet Crating Diagram 9-3
9-4 Magnetic Tape Transport and Cabinet Uncrating Diagram 9-3
9-5 CYBER 18 Magnetic Tape Transport Signal and Power Cable Connection 9-4
9-6 MTT-to-MTT Signal Cable Connections (Seven-Track NRZI Mode) 9-5
9-7 MTT-to-MTT Signal Cable Connections (Nine-Track NRZI Mode) 9-6
9-8 Magnetic Tape Transport Unit Select and Stop Jumpers 9-7
9-9 Unpacking 9-9
9-10 Signal Unit Cabinet Preparation 9-11
9-11 Dual Unit Cabinet Preparation 9-12
9-12 EMI Strip Application 9-13
9-13 Power Supply, Hinge Assembly, and Relief Bracket Attachment 9-14
9-14 Translator Board Connections 9-16
10-1 Module Drive Subsystem Block Diagram (Single CPU) 10-1
10-2 Module Drive Subsystem Block Diagram (Dual CPU) 10-2
10-3 Line Current Versus Start-Up Time 10-3
10-4 Module Drive Control Unit and Indicators 10-4
10-5 BJ402 and BJ701 Module Drive Physical Configuration 10-6
10-6 Drive Shipping Hardware 10-7
10-7 Deck Support Bracket 10-8
10-8 BJ701 Module Drive Air Filter Locations 10-9
10-9 Module Drive Control Unit Crating 10-10
10-10 Leveling Legs 10-11
10-11 Module Drive Cabinet Before Controller Installation 10-11
10-12 BU281 Mass-Storage Cabinet Before Controller Installation 10-12
10-13 BJ701 Module Drive Controller Installation 10-12
10-14 BU281 Mass-Storage Cabinet After Controller Installation 10-12
10-15 BU281 Mass-Storage Cabinet Side Cover Attaching Detail 10-13
10-16 BU281 Mass-Storage Cabinet Rear Panel Attaching Detail 10-13
10-17 BJ701 Module Drive Cabinet Installation Orientation 10-14
10-18 BU281 Mass-Storage Cabinet Installation Orientation 10-15
10-19 Controller Installation 10-15
10-20 CYBER 18 Module Drive Signal and Power Connections 10-19
10-21 Floor Grid System Grounding 10-22
10-22 BJ402 Module Drive Grounding Block 10-23
10-23 Daisy-Chain System Grounding 10-24
10-24 BJ402 Module Drive Power Cable Routing 10-25
10-25 BJ701 Basic Cable Routing with Drawer Mount 10-26
10-26 BJ402 Module Drive I/O Signal Cable Routing 10-27
10-27 BJ701 Module Drive I/O Signal Cable Routing 10-28
10-28 BZ403 Mini-Module Drive 10-29
10-29 BU281 Mass-Storage Cabinet with Mini-Module Drive Installed 10-30
10-30 BU281 Mass-Storage Cabinet with Mini-Module Drive and Control Unit Installed 10-31
10-31 Mini-Module Drive Space Requirements 10-32
10-32 Mini-Module Drive Installation 10-33
10-33 Final Assembly 10-34
10-34 Drive Belt Location 10-35
10-35 Mini-Module Removal and Replacement 10-36
10-36 Adapter Cable Attachment 10-38
10-37 A Cable Interface 10-40
10-38 B Cable Interface 10-41
10-39 Typical Cable Routing 10-41
10-40 BU281 Mass-Storage Cabinet Cabling 10-42
10-41 60 Hz ac Power Connector 10-43
10-42 Power Selector 10-43
10-43 Terminator Assembly 10-43
10-44 Mini-Module Drive Switch Locations 10-44
10-45 Logical Unit Select Switches 10-47
10-46 Max Head Switch Assembly 10-48
10-47 Device ID Switch Assembly 10-48
10-48 Device Capacity Switch Assembly 10-48
10-49 Power Supply Fuse Locations 10-49
10-50 GB138A Module Drive Interface Control Jumpers 10-51
10-51 GB145 Module Drive Adapter Control Jumpers 10-54
11-1 Tape Cassette System Block Diagram 11-2
11-2 Tape Cassette Power Supply and Power Cable Installation for Systems Using the Scott Power Supply 11-3
11-3 Tape Cassette Power Supply Cabling Installation for Systems Using the LH Power Supply 11-4
11-4 Tape Cassette Transport Controller Equipment and Function Code Switches 11-6
12-1 Flexible Disk Drive Subsystem Block Diagram 12-1
12-2 Drive Pulley Reversal 12-3
12-3 Flexible Disk Drive Power Supply and Power Cabling for Systems without GD308-A Power Supply 12-4
12-4 Flexible Disk Drive Power Supply and Power Cabling for Systems 12-5
12-5 Flexible Disk Drive Controller Switches 12-9
13-1 Typical Communications Multiplexer Subsystem Block Diagram 13-1
13-2 Single Loop Multiplexer Signal Cable Installation 13-4
13-3 Dual Loop Multiplexer Cards to Processor Backplane Siganl Cable Installation 13-5

13-4 Asynchronous Communication Line Adapter to Console Display Terminal Signal Cable 13-6
14-1 Console Display Installation Block Diagram 14-1
14-2 Crating and Uncrating the Console Display 14-3
14-3 Cabinet Hood Removal 14-4
14-4 Console Display Component Arrangement 14-4
14-5 CYBER 18 Processor Operator's Console Signal Cable Installation 14-5
14-6 Terminal to Eight-Channel Communication Line Adapter Signal Cable Installation 14-6
14-7 I/O-TTY Controller Baud Rate Select 14-8
14-8 Internal Switches and Controls 14-9
15-1 Printer Access (CT104-A/D) 15-3
15-2 Printer Parts Locations 15-4
15-3 Printer Controls and Indicators (CT104-D) 15-5
15-4 Alternate Power Configuration for Wiring the Universal Transformer 15-6
15-5 Vertical Transducer Board Switches 15-7
15-6 Controller and Print Head Board Switch-Selectable Features 15-9
15-7 RS232-C Interface Switch/Jumper Locations 15-10
15-8 Ribbon Cassette Installation 15-12
15-9 Format Tape Punch 15-12
15-10 Format Tape Configuration 15-13
15-11 Format Tape Load Operation 15-14
15-12 Forms Path for Rear Loading 15-15
15-13 Line Finder and Column Printer 15-15
15-14 Paper Basket Installation 15-16
15-15 Controller and Print Head Board Test Print Switch 15-17
15-16 Test Print Sample 15-17
16-1 CYBER 18/1500 Series Adapter and Power Supply 16-2
16-2 Power Supply Installation Kit Cables 16-3
16-3 CYBER 18/1500 Series Adapter Cabling Diagram 16-4
16-4 CYBER 18, 1500 Series Adapter Signal Cable Routing 16-6
16-5 1500 Series Adapter Signal Cables 16-7
17-1 Output Card Punch, Front View 17-2
17-2 Output Card Punch, Rear View 17-3
17-3 Power Supply and Logic Package Assembly 17-4
17-4 Power Supply, Connectors and Terminal Boards 17-5
17-5 Card Bed Component Locations, Top-Rear View 17-5
17-6 CYBER 18 Output Card Punch Signal Cable Installation 17-7
17-7 Interface (RS232) Jumper and Switch Settings 17-8
18-1 Band Line Printer Crating 18-2
18-2 Printer Access 18-3
18-3 Printer Parts Identification 18-4
18-4 Power Variation Connections 18-5
18-5 Print Gate Assembly and Ribbon Installation 18-7
18-6 Ribbon System With Guide Rollers 18-8
18-7 CYBER 18 Printer Signal and Power Cable Connections 18-11
18-8 Printer Interface Switch Locations 18-12
18-9 300-Line-Per-Minute Band Printer Switch Settings 18-13
19-1 CYBER 18 Eight-Channel Communication Line Adapter Signal Cable Installation 19-2
19-2 Controller Board Switch Locations 19-4
20-1 Field Print Package Equipment/ Interrupt Number Assignment Form 20-2
20-2 Sample Equipment/Interrupt Number Assignment Form 20-5
21-1 CR/LP/CLA Controller Modem Cable Installation 21-2
21-2 CR/LP/CLA Controller Switch/ Jumper Locations 21-4
21-3 CR/LP/CLA Controller Signal Cable Installation 21-7
22-1 Cartridge Disk Drive Cabinet Dimensions 22-1
22-2 Typical Daisy-Chain Configuration 22-2
22-3 Carriage Lock Pin Location 22-3
22-4 Voltage Adjustment Plug Configuration 22-5
22-5 Grounding Options 22-6
22-6 Sector Option Conversion 22-7
22-7 Disk Drive Control Board 22-8
22-8 Disk Drive Data Recovery Board 22-9
22-9 Disk Drive Sector Board 22-10
22-10 Disk Drive Servo Board 22-11
22-11 Disk Drive 3M-I/O Board 22-12
22-12 Disk Drive Unit Number and Seek Completion Switch Configuration 22-13
22-13 CDDC Switch and Jumper Location and Selection 22-14
22-14 Controller-to-Drive Signal Cable 22-17
22-15 Daisy-Chain Cable 22-17
23-1 Magnetic Tape Transport Block Diagram 23-1
23-2 Magnetic Tape Transport System Maximum Configuration 23-2
23-3 Magnetic Tape Transport Cabinet Uncrating 23-4
23-4 Magnetic Tape Transport Signal and Power Cabling 23-5
23-5 Formatter-to-Controller Cable Connections 23-6
23-6 Formatter-to-Transport and Transport-to-Transport Signal Cable Connections (Seven-Track) 23-6
23-7 Formatter-to-Formatter and Transport Signal Cable Connections (Nine-Track) 23-7
23-8 Magnetic Tape Transport Unit Select and Stop Jumpers 23-8
23-9 Magnetic Tape Transport Controller Switch and Mode Jumper Locations 23-9
23-10 Magnetic Tape Transport Crating and Uncrating 23-13
23-11 Single Unit Cabinet Preparation 23-15
23-12 Dual Unit Cabinet Preparation 23-16
23-13 Installation of Cabinet Fans 23-17
23-14 EMI Strip Application 23-18
23-15 Power Supply, Hinge Assembly, and Relief Bracket Attachment 23-19
23-16 Magnetic Tape Transport Stay Rod and Bracket Installation 23-20
23-17 Product Emblem Location 23-21
23-18 Formatter Crating and Uncrating 23-22
23-19 Formatter Installation 23-24
23-20 Cable Support Bracket Installation 23-24
23-21 Power Cord Connection 23-25
24-1 SDLC CLA Block Diagrams 24-2
24-2 SDLC CLA Backplane Pin Assignments 24-3
24-3 I/O Connector Panel Cutout Assignments 24-4
24-4 SDLC CLA Signal Cabling Installation 24-5
24-5 Cabinet Overhead Cable Routing 24-6
24-6 I/O Connector Panel and Overhead Cable Support Bar Installation 24-8
24-7 Multidrop Network Cabling 24-9
24-8 PWA Switch and Jumper Locations 24-10

24-9 Secondary Address Selection 24-10
25-1 I/O Connector Panel and Overhead Cable Support Bar Location, Top View 25-3
25-2 BCLA Signal Cabling Installation 25-4
25-3 I/O Connector Panel Cutout Assignments 25-5
25-4 Cabinet Overhead Cabling and Power Supply Installation 25-6
25-5 Processor Power Supply and Power Distribution Box Locations 25-7
25-6 Power Supply Assembly Details 25-8
25-7 BCLA PWA Component Locations 25-9
25-8 BCLA Interrupt Wiring 25-12
26-1 Paper Tape/Card Punch Subsystem Block Diagram 26-1
26-2 Paper Tape Subsystem Configurations 26-2
26-3 Card Punch Power Card Connection 26-3
26-4 Signal and Power Cable Connections 26-5
26-5 Controller Backplane Pin Assignments 26-6
27-1 Processor Chassis Equipment Locations 27-2
27-2 Processor Power Conversion Transformer Installation 27-3
27-3 Processor Power Conversion Unit Wiring Diagram 27-4
28-1 Power Conversion Unit Locations 28-2
28-2 Power Conversion Unit Installation 28-3
28-3 Magnetic Tape Transport Power Conversion Unit Wiring Diagram 28-4
29-1 BOP Signal Cable Connection 29-2
30-1 Auto Restart Loader System Block Diagram 30-1
30-2 Auto Restart Loader Component Locations 30-3
30-3 PROM Address Select Switch (SW3) 30-4
30-4 Auto Restart Loader Paddle Board 30-6
30-5 Auto Restart Loader and Stall Alarm Panel Signal Cabling 30-7
30-6 Stall Alarm Panel Signal Cable 30-8
30-7 Stall Alarm Panel Signal Cabling 30-9
31-1 CC628 Display Terminal External Controls, Operator Access Door 31-2
31-2 CC628 Display Terminal Power On/Off Switch and Keyboard Indicators 31-3
31-3 CC628 Display Terminal (Bottom View) 31-3

TABLES

1-1 CYBER 18 Processor Expansion Equipment 1-5
1-2 CYBER 18 System Peripheral Controllers and Equipment 1-7
1-3 Standard Equipment Code and Interrupt Number Assignments 1-17
1-4 AC Power Requirements 1-18
1-5 Equipment Handler Requirement, Weight (Uncrated), and Operating Environment 1-19
1-6 Tools Required 1-20
2-1 Product Identification Label Placement Index 2-14
3-1 Address Connector Attachment 3-3
3-2 Standard Configurations of Optional Read/Write Micro Memory 3-4
4-1 Power Conversion Transformer Voltage Taps 4-1
7-1 Card Reader Function and Interface Polarity Switch Settings 7-6
8-1 7PC1 Switch Settings 8-11
8-2 7PC6 Switch Settings 8-11
9-1 Address and Interrupt Lines 9-7
9-2 Initial Visual Inspection 9-10
10-1 Module Drive I/O Connector Pin Assignments 10-17
10-2 Module Drive I/O Cable Installation Accessories 10-20
10-3 Module Drive A Cable I/O Connector Pin Assignments 10-21
10-4 Module Drive B Cable I/O Connector Pin Assignments 10-21
10-5 Grounding Accessories 10-22
10-6 Sector Switch Values 10-45
10-7 Switch Position for Allowable Sectors per Track 10-46
10-8 Switch Positions for Unit Number Selections 10-47
10-9 GB138-A Jumper Settings 10-50
10-10 Autoload Drive Unit (Location L8) 10-52
10-11 Equipment Code Select (Location N12) 10-52
10-12 GB145 Jumper Settings 10-53
10-13 Autoload Drive Number (Location J5) 10-55
10-14 Equipment Code Select (Location M22) 10-56
13-1 Line Adapter Cable Assemblies 13-2
14-1 Printed Wiring Assembly Switch/Jumper Setting 14-10
15-1 Universal Transformer Configuration 15-6
15-2 Printer/Terminal Connector Pin Assignments 15-7
16-1 Interrupt Wire Connections 16-5
18-1 Bottom of Form and Channels for Programming 18-9
19-1 Equipment Code Select Switch Settings (S1) 19-5
19-2 Unit Select Switch Settings (S2) 19-5
19-3 Timer Interrupt Select Switch Settings (S4) 19-5
19-4 Auxiliary Baud Rate Select Switch Settings (S5) 19-5
19-5 Baud Rate Select Switch Settings (S6 and S7) 19-6
19-6 Channel Function Select Switch Setting (S8) 19-6
19-7 Channel Function Select Switch Assignments (S8 and S15) 19-6
19-8 Protect Switch S3 19-7
20-1 Standard Controller Slot Assignments 20-1
20-2 Recommended Equipment and Interrupt Number Assignments 20-3
20-3 Standard Interrupt Wiring Assignments 20-4
21-1 Jumper Definition 21-6
22-1 Input Power Requirements 22-4
22-2 Cartridge Disk Drive Controller Manual Controls 22-15
22-3 Equipment Code Selection 22-16
22-4 Unit Protect Selection 22-16
22-5 Unit Density Selection 22-16
23-1 Magnetic Tape Transport Controller Manual Controls 23-10
23-2 Equipment Code Select Jumpers 23-11
23-3 Unit Protect Select Jumpers 23-11
23-4 Transport Visual Inspection 23-14
23-5 Formatter Visual Inspection 23-23
23-6 Formatter Jumpers 23-25
24-1 CPU Backplane Wire Changes 24-3
24-2 W-Field Address Selection 24-11

24-3 Processing Mode and Idle Character Selection 24-12
24-4 Equipment Code Select Jumpers 24-12
24-5 Cable Control and Stall Timer Selection 24-13
24-6 Data Transfer Rate Select Jumpers 24-14
25-1 W-Field Number Select 25-10
25-2 Equipment Code Select Jumpers 25-11
25-3 No-Stop-on-Error Option Selection 25-11
26-1 Controller Jumper Settings 26-3
26-2 Backplane Wire Deletions 26-4
26-3 Card Punch Control Functions 26-7
26-4 Test Card Conditions 26-8
26-5 Offline Test Switch Selection 26-8
27-1 Processor Power Conversion Unit Transformer Input/Output Connections 27-1
28-1 Magnetic Tape Transport Power Conversion Unit Transformer Input/Output Connections 28-1
29-1 Backplane Wire Additions 29-1
30-1 CPU Backplane Wire Changes 30-2
30-2 Special Paddle Board Signal Jumpers 30-3
30-3 Equipment Code Select Switch (SW2) Settings 30-4
30-4 Auto Restart Loader PWA Jumpers 30-5
30-5 Increased Data PROM Locations 30-5
30-6 Paddle Board Signal Jumpers 30-6
30-7 Stall Alarm Panel TB 01 Connections 30-8
30-8 Digital I/O Device Connections 30-9
30-9 Pin List of Digital I/O Connectors J1, J2, J5, and J6 30-10
33-1 Printer Switch Settings 33-2

This manual contains installation information for the CYBER 18 computer systems containing metal-oxide semiconductor (MOS) main memory. General descriptions of each CYBER 18 system configuration, expansion equipment, and peripheral equipment are provided in this section.

SYSTEM DESCRIPTION

The CYBER 18 system is a small, general-purpose computer system using a macro- and micro-programmable computer as a central processing unit. A number of peripheral devices, such as a card reader, console display, and line printer, connect to the processor to form a CYBER 18 system. Figures 1-1 through 1-5 illustrate typical CYBER 18 system configurations.

The CYBER 18 systems are developed around a basic processor that may be configured in many different forms using basic hardware. Interface between the processor and a peripheral equipment is through a peripheral controller board housed in an allocated slot position of the processor chassis. The controller boards interconnect to the processor through a common chassis backplane. An interface cable interconnects the chassis backplane of the controller board location to the peripheral equipment through push-on connectors.

CONFIGURATION

The CYBER 18 systems may have many different configurations using the same basic hardware. The configurations differ in the functional operations of logic processing, memory expansion capability, peripheral equipment, and related backplane wiring.

The processor is installed in a table-top equipment cabinet. A detailed description of the processor installations is provided in section 2, Processor Unit.

CYBER 18-5M BATCH TERMINAL

This micro-programmable processor accommodates from 32K to 131K 8-bit bytes of MOS main memory. The system is supplied with main memory, console display, card reader/line printer/communication line adapter, and basic operators panel. Basic features are hardware multiply/divide, 16 levels of macro and micro interrupts, automatic data transfer (ADT), real-time clock (RTC), and deadstart (DS) loading from peripheral equipment. This processor services the card reader, line printer, one modem, and NRZI magnetic tape subsystems (7- or 9-track).

Equipment supplied in the CYBER 18-5M Batch Terminal basic configuration includes a console display, basic operators panel, and the processor components listed in figure 1-6. Refer to figure 1-1 for the installation arrangement.

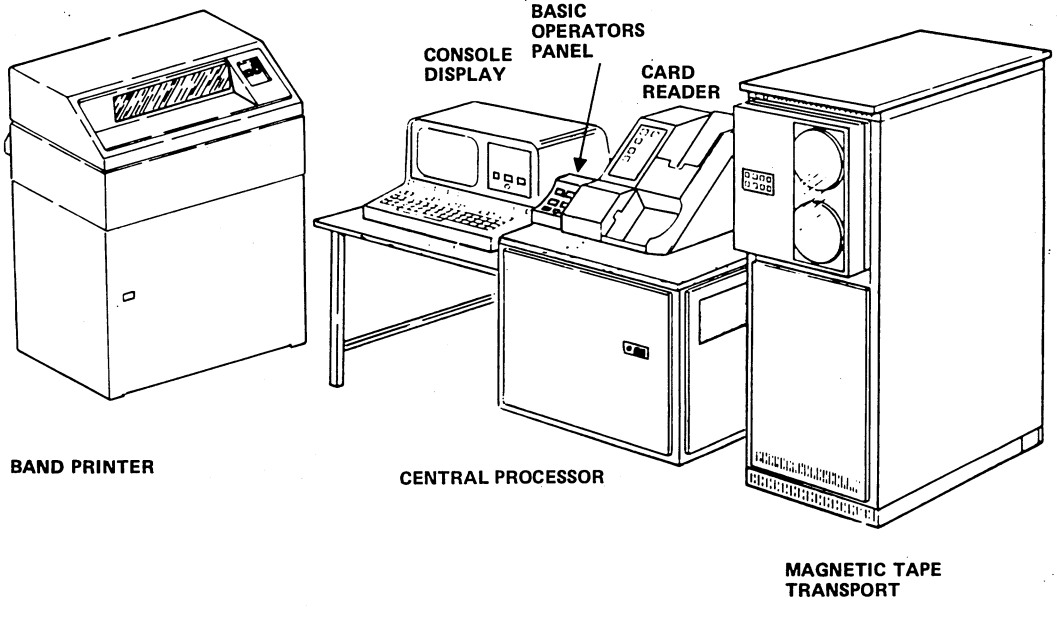

Figure 1-1. Typical CYBER 18-5M Batch Terminal Configuration

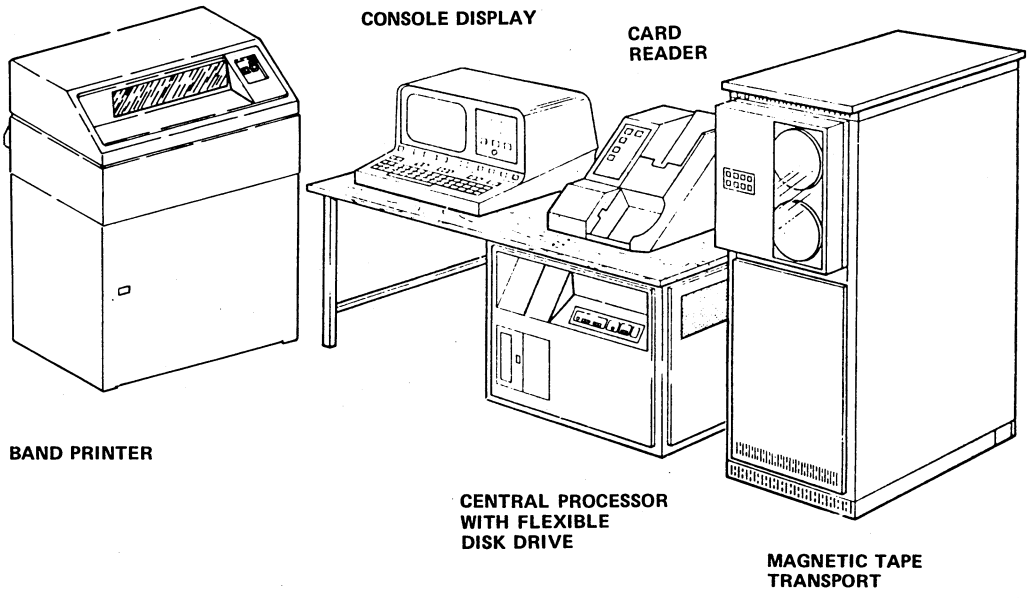

Figure 1-2. Typical CYBER 18-10M Configuration

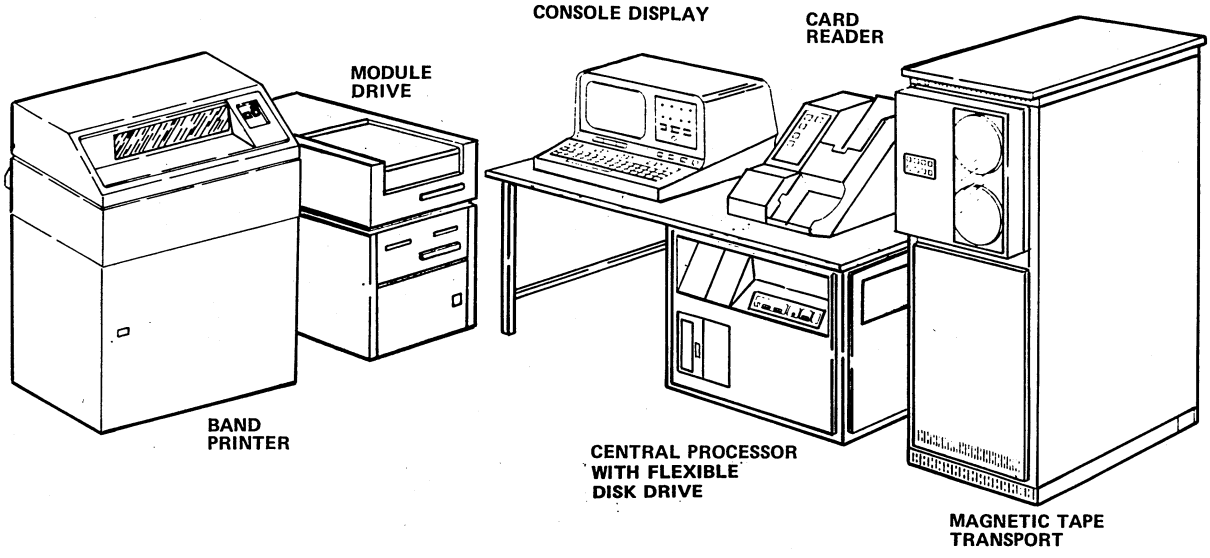

Figure 1-3. Typical CYBER 18-20 Configuration

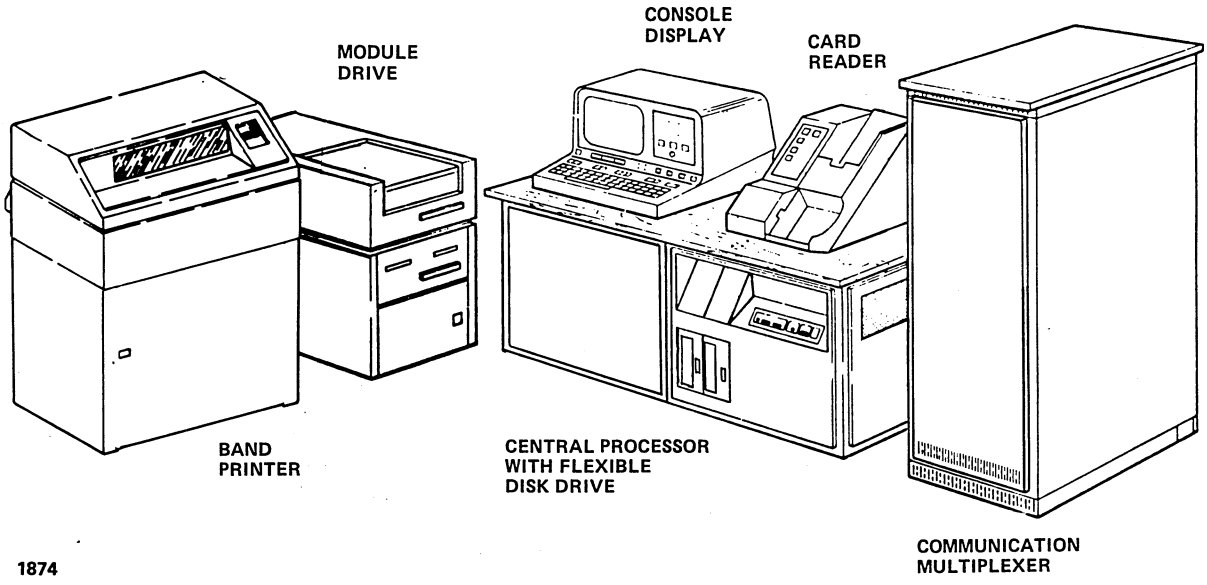

Figure 1-4. Typical CYBER 18-25 Configuration

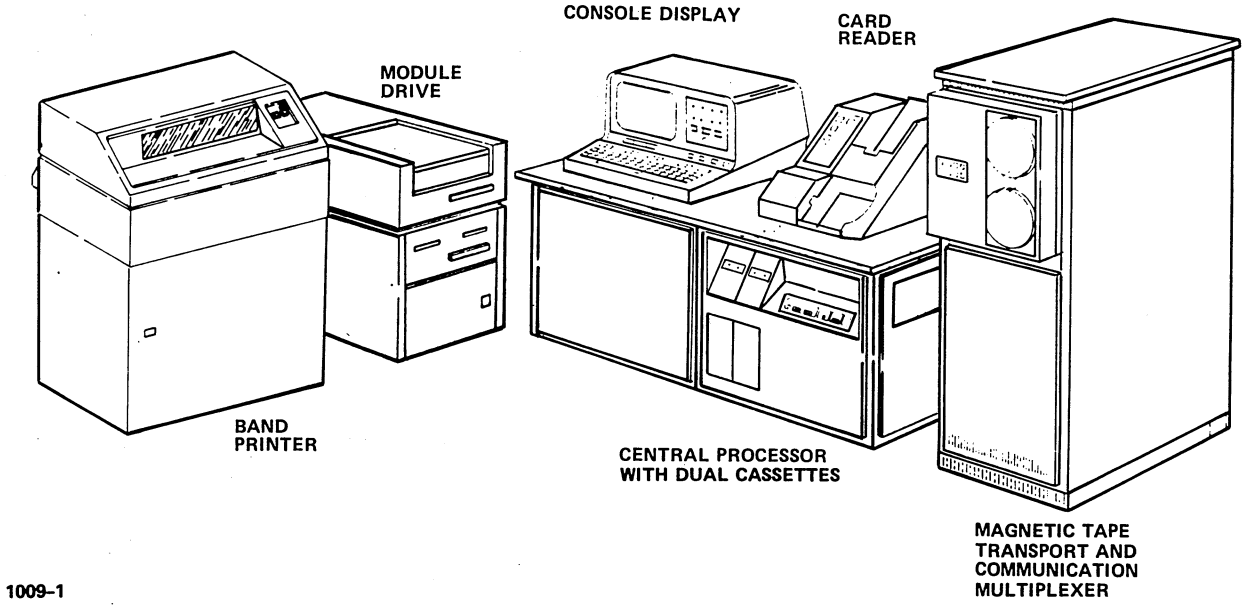

Figure 1-5. Typical CYBER 18-30 Configuration

PROCESSOR CHASSIS MAP

AC	Z	Y	X	W	V	U	T	S	R	P	N	M	L	K	J	H	G	F	E	D	C	B	A	AA	AB
MAXIMUM	UP TO 64K WORDS	BOARD (MAIN)	16K MEMORY	MEMORY INTERFACE, ADDRESS†	MEMORY INTERFACE, DATA†	OPEN	OPEN	OPEN	1700 TRANSFORM WITH READ-ONLY MEMORY†	CONTROL 1†	CONTROL 2†	ARITHMETIC LOGICAL UNIT (ALU)†	STATUS MODE INTERRUPT (SMI)†	I/O-TTY CONTROLLER†	CLR/LP OR CR/LP/CLA	NOT USED	NOT USED	A/Q	NOT USED	NOT USED	NOT USED	NOT USED	NOT USED	NOT USED	A/Q (SPECIAL)

MOS MEMORY (16K WORD)

MEMORY INTERFACE DATA

MEMORY INTERFACE ADDRESS

1700 TRANSFORM WITH ROM

CONTROL 1

CONTROL 2

ARITHMETIC LOGICAL UNIT

STATUS MODE INTERRUPT

I/O-TTY CONTROLLER

CARD READER/LINE PRINTER/ COMMUNICATION LINE ADAPTER

SECOND CARD READER/LINE PRINTER/COMMUNICATION LINE ADAPTER

CARD READER/LINE PRINTER CONTROLLER

MAGNETIC TAPE SUBSYSTEM, NRZI

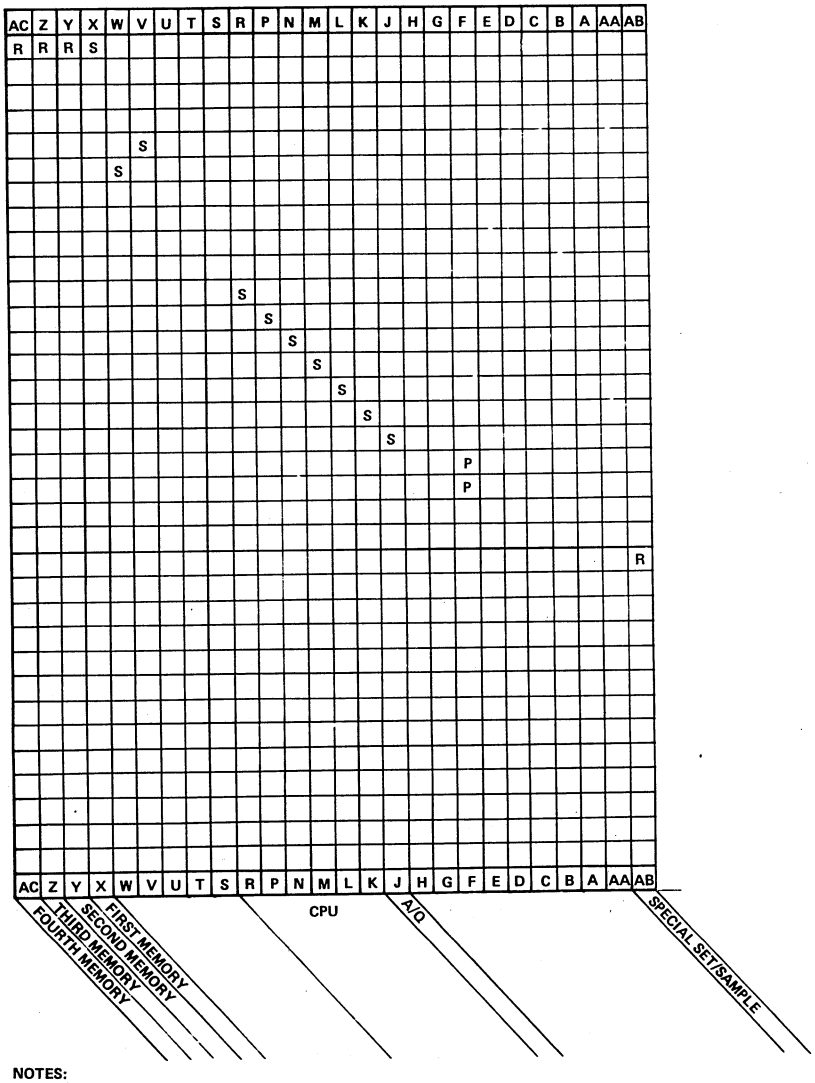

NOTES:
A = ALTERNATE SLOT FOR THIS CARD
P = PRIMARY SLOT FOR THIS CARD
R = PWA IS RESTRICTED TO THIS SLOT ONLY
S = SUPPLIED EQUIPMENT
SLOT J HAS DEADSTART
ALTERNATE SLOTS FOR THE SECOND CR/LP/CLA AND THE CR/LP CONTROLLERS CAN BE ANY A/Q SLOT.

2185-1

Figure 1-6. CYBER 18-5M Batch Terminal PWA Slot Assignment

CYBER 18-10M

This micro-programmable processor accommodates 32K to 131K 8-bit bytes of metal-oxide semiconductor (MOS) main memory with an effective read/write cycle of 750 nanoseconds. Basic features are hardware multiply/divide, 16 levels of program interrupts, automatic data transfer (ADT), real-time clock, and deadstart loading from peripheral equipment. This processor services peripherals that use direct register (A/Q) and direct memory access (DMA) transfer techniques.

Equipment supplied in the CYBER 18-10M basic configuration includes a console display, flexible disk drive subsystem, and the processor components listed in figure 1-7. Refer to figure 1-2 for the installation arrangement. Peripheral equipments and subsystems serviced by the CYBER 18-10M are also indicated in figure 1-7 and listed in tables 1-1 and 1-2.

CYBER 18-20

This micro-programmable processor accommodates 32K to 262K 8-bit bytes of metal-oxide semiconductor (MOS) main memory with an effective read/write cycle of 750 nanoseconds. The basic features are hardware multiply/divide, 16 levels of macro interrupts, 16 levels of micro interrupts, automatic data transfer (ADT), real-time clock, and deadstart loading from peripheral equipments. This processor services peripheral equipments that use direct register (A/Q) and direct memory access (DMA) transfer techniques. Eight input/output peripheral controller ports are provided that may accommodate four direct register (A/Q) and four direct memory access (DMA) data transfer controllers.

Equipment supplied in the CYBER 18-20 basic configuration includes a flexible disk drive subsystem and the processor components listed in figure 1-8. Refer to figure 1-3 for the installation arrangement. Peripheral equipments and subsystems serviced by this system are also indicated in figure 1-8 and listed in tables 1-1 and 1-2.

CYBER 18-25

The CYBER 18-25 system is a dual micro-programmable processor system that supports from one to 32 optional terminals and can be expanded to accommodate 64 terminals. The basic features of the CYBER 18-25 are the same as a CYBER 18-20 plus dual-processor memory interface, paging register, and read/write random access memory (RAM) for 2K of micro-instructions in each processor. Each processor can accommodate from 32K to 262K 8-bit bytes of MOS memory.

Equipment supplied in the CYBER 18-25 basic configuration includes two flexible disk drive subsystems and the processor components listed in figure 1-9. Refer to figure 1-4 for the installation arrangement. Peripheral equipments and subsystems serviced by this system are also indicated in figure 1-9 and listed in table 1-1 and 1-2.

CYBER 18-30

The CYBER 18-30 system is a dual micro-programmable processor system that supports from one to 32 optional terminals and can be expanded to accommodate 64 terminals. The basic features are the same as a CYBER 18-20 plus dual-processor memory interface, paging registers, and read/write random access memory (RAM) for 2K of micro-instructions in each processor. It also contains 98K 8-bit bytes of MOS memory in the communications processor, and 128K 8-bit bytes of MOS memory in the timeshare processor.

Equipment supplied in the CYBER 18-30 basic configuration includes 128K bytes and 98K bytes of MOS memory, two tape cassette transport subsystems, a console display, a module drive subsystem, a magnetic tape transport subsystem, and a line printer subsystem plus the processor components listed in figure 1-10. Refer to figure 1-5 for the installation arrangement. Peripheral equipments and subsystems serviced by this system are also indicated in figure 1-9 and listed in tables 1-1 and 1-2.

TABLE 1-1. CYBER 18 PROCESSOR EXPANSION EQUIPMENT

System Application	Equipment Name	Equipment Number
18-10M/18-20	512-instruction micro memory	BA209
18-10M/18-20	2K-instruction micro memory	BA210
18-10M/18-20/18-25/18-30	Error correction code MOS array 192K bytes	DT223
All	MOS memory array (16K)	AT275
18-10M/18-20/18-25/18-30	MOS memory array (32K)	AT241
18-10M/18-20/18-25/18-30	Breakpoint controller	FC402
	Breakpoint panel	DT120

PROCESSOR CHASSIS MAP

AC	Z	Y	X	W	V	U	T	S	R	P	N	M	L	K	J	H	G	F	E	D	C	B	A	AA	AB
MAXIMUM	UP TO 64K WORDS	BOARD (MAIN)	16K MEMORY	MEMORY INTERFACE, ADDRESS†	MEMORY INTERFACE, DATA†	OPEN	OPEN	OPEN	1700 TRANSFORM WITH READ-ONLY MEMORY	CONTROL 1	CONTROL 2	ARITHMETIC LOGICAL UNIT (ALU)	STATUS MODE INTERRUPT (SMI)	I/O-TTY CONTROLLER	A/Q	A/Q-DMA	A/Q-DMA	A/Q	A/Q	A/Q-DMA	A/Q	OPEN	A/Q-DMA	A/Q	A/Q (SPECIAL)

MOS MEMORY (16K WORD)

ERROR CORRECTION CODE
BREAKPOINT CONTROLLER
MEMORY INTERFACE DATA
MEMORY INTERFACE ADDRESS
MICRO MEMORY, 512 WORDS
MICRO MEMORY, 2K WORDS
SCIENTIFIC OPTION, 512 WORDS
SCIENTIFIC OPTION, 2K WORDS
1700 TRANSFORM WITH ROM
CONTROL 1
CONTROL 2
ARITHMETIC LOGICAL UNIT
STATUS MODE INTERRUPT
I/O-TTY CONTROLLER
CARD READER/LINE PRINTER/ COMMUNICATION LINE ADAPTER
CARD READER-LINE PRINTER INTERFACE

PAPER TAPE READER/PAPER TAPE PUNCH CONTROLLER
CARTRIDGE DISK DRIVE CONTROLLER
MAGNETIC TAPE SUBSYSTEM, NRZI
MAGNETIC TAPE SUBSYSTEM, DUAL MODE†
DUAL-CHANNEL COMMUNICATION LINE ADAPTER
EIGHT-CHANNEL COMMUNICATION LINE ADAPTER
1500 SERIES ADAPTER
BCLA
BCLA EXPANSION
SDLC CLA

FLEXIBLE DISK DRIVE
AUTO RESTART LOADER
AQ EXTENDER††
DMA EXTENDER††

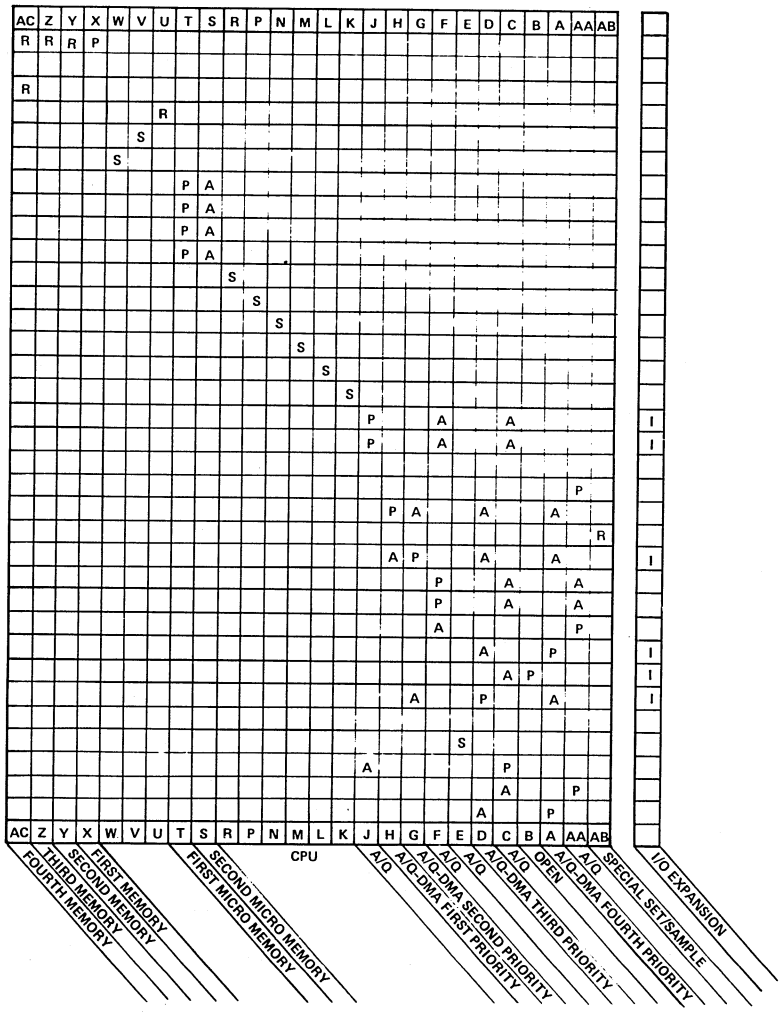

NOTES:
A = ALTERNATE SLOT FOR THIS CARD
I = ITEMS SUPPORTED BY I/O EXPANSION SUBSYSTEM
P = PRIMARY SLOT FOR THIS CARD
R = THIS CARD IS RESTRICTED TO THIS SLOT ONLY.
S = SUPPLIED EQUIPMENT
THE 18/1500 ADAPTER CANNOT BE INSTALLED IN CARD SLOTS THAT HAVE DEADSTART CAPABILITY.
THE BCLA EXPANSION MUST OCCUPY A SLOT ADJACENT TO THE BCLA.
SLOT J AND E HAVE DEADSTART.
SLOT H HAS AUTOLOAD WIRED.
SLOTS D AND C HAVE DEADSTART ONLY ON THE BACKPLANE OF MODELS B,C, AND D.
SLOT A HAS DEADSTART ONLY ON THE BACKPLANE OF THE MODEL A.
IF THE SDLC CLA IS INSTALLED IN SLOT G, THE WIRE FROM G-293 TO H-293 MUST BE REMOVED.

†SLOT D CAN BE AN ALTERNATE FOR THE MODEL A BACKPLANE ONLY
††PART OF I/O EXPANSION SUBSYSTEM
2186-1

Figure 1-7. CYBER 18-10M PWA Slot Assignment

TABLE 1-2. CYBER 18 SYSTEM PERIPHERAL CONTROLLERS AND EQUIPMENT

System Application	Equipment Name	Equipment Number
All	Card reader/line printer interface	FH301
	or	
	Card reader/line printer/communication line adapter controller	FC109 or FC539
	Optical card reader (300 card/min.)	CB104
	Optical card reader (600 card/min.)	CB104
	Card reader cable, 15 feet (4.5 meters)	
	Line printer (300 line/min., 120 V/60 Hz)	CL408 or
	or	CL411
	Line printer (300 line/min., 220 V/50 Hz)	CL408 or CL411
	Line printer cable, 20 feet (6.1 meters)	
	Line printer cable, 50 feet (15.2 meters)	
	Line printer (300 line/min., 120/220 V, 60/50 Hz)	CT105
	Cable assembly, 20 feet (6.1 meters)	
	Cable assembly, 50 feet (15.2 meters)	
	Line printer (600 line/min., 120/220 V, 60/50 Hz)	CT103
	Cable assembly, 20 feet (6.1 meters)	
	Cable assembly, 50 feet (15.2 meters)	
All	Line printer (900 line/min., 120/220 V, 60/50 Hz)	CT106
	Cable assembly, 20 feet (6.1 meters)	
	Cable assembly, 50 feet (15.2 meters)	
All	Terminal adapter cable	YA129
	Modem cable, 50 feet (15.2 meters)	YA130
All	Magnetic tape controller (NRZI only)	FA107
	or	
	Magnetic tape controller (NRZI and PE)	FA464 or FA465
	Magnetic tape transport (seven-track)	BW101
	Magnetic tape transport (nine-track)	BW303
	Magnetic tape formatter	DZ101
	Magnetic tape installation kit - upper	YA135
	Magnetic tape installation kit - lower	YA136
	Equipment cabinet	XA123 or GH447

TABLE 1-2. CYBER 18 SYSTEM PERIPHERAL CONTROLLERS AND EQUIPMENT (Contd)

System Application	Equipment Name	Equipment Number
18-10M/18-20/ 18-25/18-30	Flexible disk drive controller	FA730
	Flexible disk drive, unit 0 (120 V, 50/60 Hz)	BR803
	Flexible disk drive, unit 1 (120 V, 50/60 Hz)	BR803
	Flexible disk drive finalization kit (unit 0)	YA137
	Flexible disk drive finalization kit (unit 1)	YA138
18-20/18-25/ 18-30	Module drive interface (single CPU)	GB138
	Module drive interface finalization kit	YA123
	Module drive interface (dual CPU)	GB138
	Module drive interface finalization kit	YA124
	Module drive adapter	GB145
	Module control unit	FA727
	Module control unit (controller/formatter)	FA727
	Module drive (120 V/60 Hz)	BJ701
	Module drive (220 V/50 Hz)	BJ701
	Module drive (300 megabyte)	BJ402
	Module drive cable, 50 feet (15.2 meters)	YA127
18-10M/18-20/ 18-30	Cartridge disk drive controller	FA111 or FA750
	Cartridge disk drive (100/250 V/60 Hz)	BR704
	Cartridge disk drive (100/250 V/50 Hz)	BR704
18-10M/18-20	Tape cassette controller	FA104
	Tape cassette transport	BE602
18-10M/18-20/ 18-25/18-30	Communication line adapter (dual channel)	FJ441
	Terminal adapter cable	YA129
	Modem cable, 50 feet (15.2 meters)	YA130
18-10M/18-20/ 18-25/18-30	Communication line adapter (eight-channel)	FJ442
18-10M/18-20/ 18-25/18-30	CYBER 18/1500 Series adapter	AT352
	±20 V power supply	
	A/Q cable, 40 feet (12.2 meters)	
	Interrupt cable, 40 feet (12.2 meters)	
18-10M/18-20/ 18-25/18-30	Output card punch	CF112
	Modem/punch cable, 50 feet (15.2 meters)	AT354

TABLE 1-2. CYBER 18 SYSTEM PERIPHERAL CONTROLLERS AND EQUIPMENT (Contd)

System Application	Equipment Name	Equipment Number
18-10M/18-20/ 18-25/18-30	Line printer (70 line/min.)	CT104
	or	
	Matrix printer	CK130
	Printer cable, 50 feet (15.2 meters)	AT354
All	Console display	CC555
All	Console display	CC614
All	Display terminal	CC628
	CRT cable, 50 feet (15.2 meters)	AT354
All	Power conversion transformer (system)	XA118
All	Power conversion transformer (processor)	GK203
All	Power conversion transformer (magnetic tape subsystem)	GK205
18-25/30	Asynchronous communication line adapter	DU137
18-25/30	Multiplexer loop interface adapter	DY192
18-10M/18-20/ 18-25	Paper tape/card punch controller	FE516 or FE308
	Paper tape relay station	DK609 or DL103
	Cable, controller to relay station	
	Cable, relay station to paper tape punch	
	Cable, relay station to paper tape reader	
	Cable, controller to card punch	
18-10M/18-20	Auto restart loader	FV679
	Stall alarm panel	FV701
	Cable assembly, 15 feet (1.5 meters)	
18-10M/18-20	Synchronous data link control communication line adapter	FJ448
	Local line coupler (channel 1)	FV678
	Local link coupler (channel 2)	FV678
18-10M/18-20/	Buffered communication line adapter	FJ127
	Current loop adapter power supply	DY221
	Current loop adapter	DT610
	Buffered communication line adapter expansion	FJ128
18-10M/18-20/ 18-25	I/O Expansion Subsystem	
	I/O Expansion Unit	CW218
	AQ Extender PWA†	AT314
	DMA Extender PWA††	BU272
	Dual Mode Access	BU115

†May be added to subsystem if DMA capability is required.

††May be added to subsystem when two-computer access is required.

PROCESSOR CHASSIS MAP

AC	Z	Y	X	W	V	U	T	S	R	P	N	M	L	K	J	H	G	F	E	D	C	B	A	AA	AB
MAXIMUM	UP TO 128K WORDS	BOARD (MAIN)	16K MEMORY	MEMORY INTERFACE, ADDRESS†	MEMORY INTERFACE, DATA†	OPEN	OPEN	OPEN	1700 TRANSFORM WITH READ-ONLY MEMORY†	CONTROL 1	CONTROL 2	ARITHMETIC LOGICAL UNIT (ALU)	STATUS MODE INTERRUPT (SMI)	I/O-TTY CONTROLLER	A/Q	A/Q-DMA	A/Q-DMA	A/Q	A/Q	A/Q-DMA	A/Q	OPEN	A/Q-DMA	A/Q	A/Q (SPECIAL)

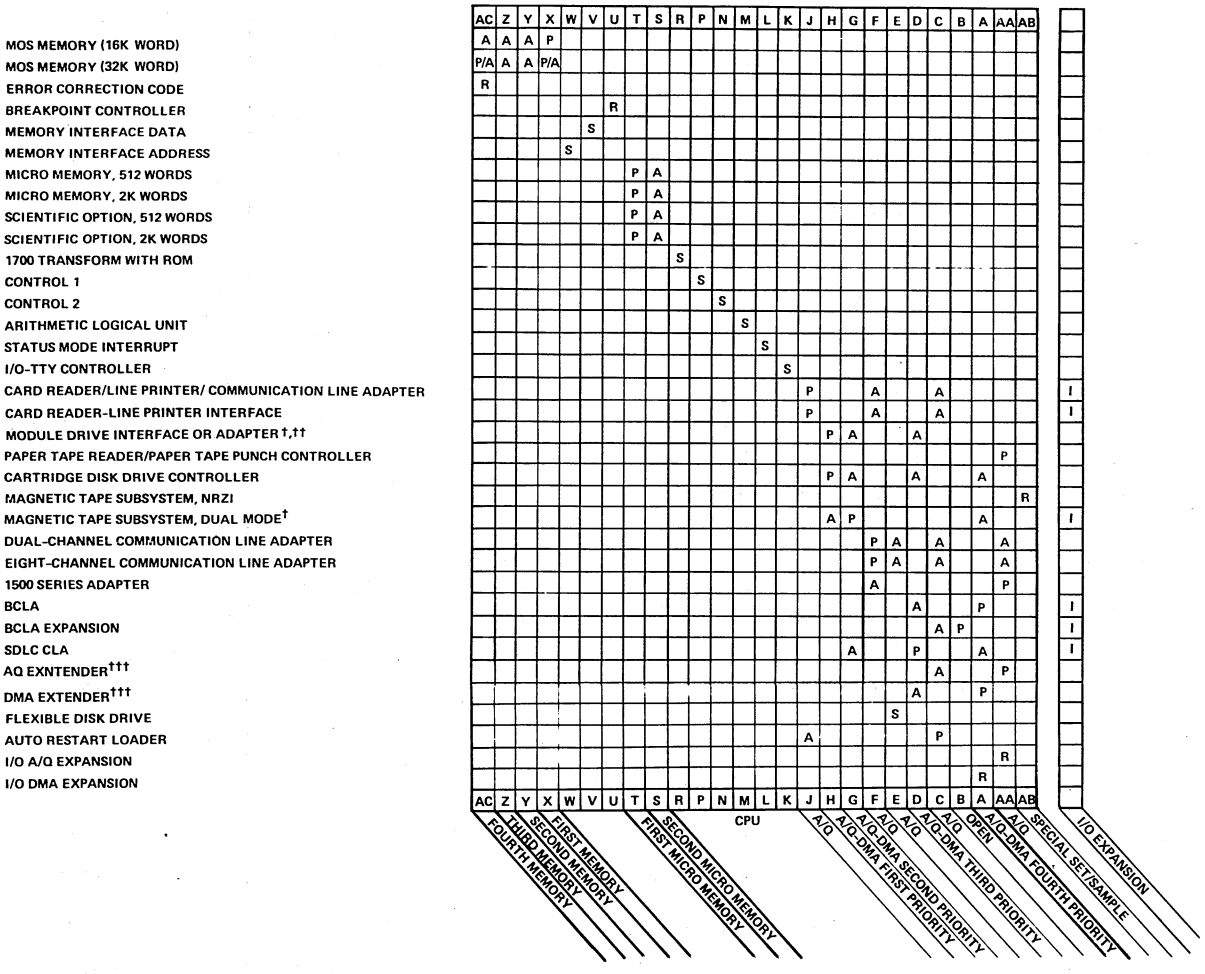

NOTES: A = ALTERNATE SLOT FOR THIS CARD
I = ITEM SUPPORTED BY I/O EXPANSION SUBSYSTEM
P = PRIMARY SLOT FOR THIS CARD
R = THIS CARD IS RESTRICTED TO THIS SLOT ONLY.
S = SUPPLIED EQUIPMENT
WHEN 16-WORD AND 32-WORD MEMORIES ARE BOTH ON A SYSTEM, THE 32-WORD MEMORY HAS PRIORITY.
WHEN A MODULE DRIVE AND A CDD ARE ON THE SAME SYSTEM, THE MODULE DRIVE HAS THE HIGHEST PRIORITY SLOT.
THE 18/1500 ADAPTER CANNOT BE INSTALLED IN CARD SLOTS THAT HAVE DEADSTART CAPABILITY.
THE BCLA EXPANSION MUST OCCUPY A SLOT ADJACENT TO THE BCLA.
SLOT J AND E HAVE DEADSTART.
SLOT H HAS AUTOLOAD WIRED.
SLOTS D AND C HAVE DEADSTART ONLY ON THE BACKPLANE OF MODELS B,C, AND D.
SLOT A HAS DEADSTART ONLY ON THE BACKPLANE OF THE MODEL A.
IF THE SDLC CLA IS INSTALLED IN SLOT G, THE WIRE FROM G-293 TO H-293 MUST BE REMOVED.

†SLOT D CAN BE AN ALTERNATE FOR THE MODEL A BACKPLANE ONLY
††SLOT A CAN BE AN ALTERNATE FOR THE BACKPLANE OF MODELS B,C, AND D.
†††PART OF I/O EXPANSION SUBSYSTEM
2187-1

Figure 1-8. CYBER 18-20 PWA Slot Assignment

PROCESSOR CHASSIS MAP

POSITION	FUNCTION
AB	A/Q (SPECIAL)
AA	A/Q
A	A/Q-DMA
B	OPEN
C	A/Q
D	A/Q-DMA
E	A/Q
F	A/Q
G	A/Q-DMA
H	A/Q-DMA
J	A/Q
K	I/O-TTY CONTROLLER
L	STATUS MODE INTERRUPT (SMI)
M	ARITHMETIC LOGICAL UNIT (ALU)
N	CONTROL 2
P	CONTROL 1
R	1700 TRANSFORM WITH READ-ONLY MEMORY
S	OPEN
T	OPEN
U	OPEN
V	MEMORY INTERFACE, DATA†
W	MEMORY INTERFACE, ADDRESS†
X	16K MEMORY
Y	BOARD (MAIN)
Z	UP TO 128K WORDS
AC	MAXIMUM

MOS MEMORY (16K WORD)
MOS MEMORY (32K WORD)
ERROR CORRECTION CODE
BREAKPOINT CONTROLLER
MEMORY INTERFACE DATA
MEMORY INTERFACE ADDRESS
MICRO MEMORY, 512 WORDS
MICRO MEMORY, 2K WORDS
SCIENTIFIC OPTION, 512 WORDS
SCIENTIFIC OPTION, 2K WORDS
1700 TRANSFORM WITH ROM
CONTROL 1
CONTROL 2
ARITHMETIC LOGICAL UNIT
STATUS MODE INTERRUPT
I/O-TTY CONTROLLER
CARD READER/LINE PRINTER/ COMMUNICATION LINE ADAPTER
CARD READER-LINE PRINTER INTERFACE
MODULE DRIVE INTERFACE OR ADAPTER
PAPER TAPE READER/PAPER TAPE PUNCH CONTROLLER
CARTRIDGE DISK DRIVE CONTROLLER
MAGNETIC TAPE SUBSYSTEM, NRZI
MAGNETIC TAPE SUBSYSTEM, DUAL MODE
DUAL-CHANNEL COMMUNICATION LINE ADAPTER
EIGHT-CHANNEL COMMUNICATION LINE ADAPTER
1500 SERIES ADAPTER

AQ EXTENDER†
DMA EXTENDER†
FLEXIBLE DISK DRIVE
AUTO RESTART LOADER
I/O A/Q EXPANSION
I/O DMA EXPANSION

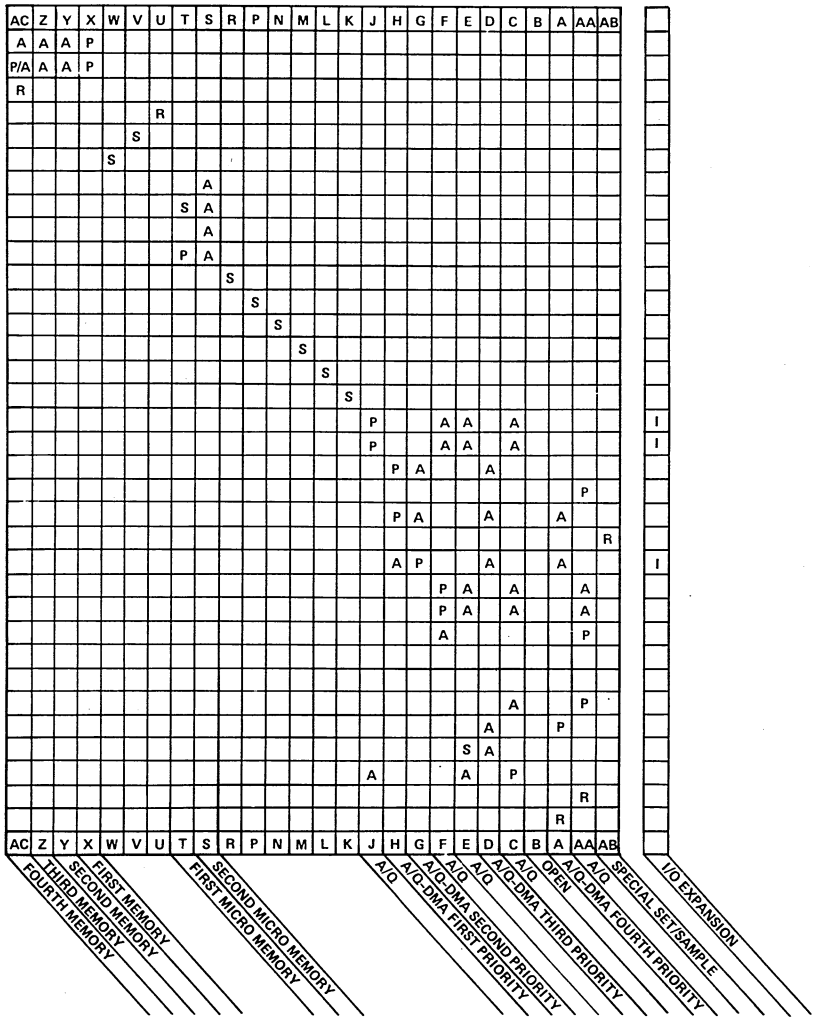

CPU 1

NOTES: A = ALTERNATE SLOT FOR THIS CARD
I = ITEM SUPPORTED BY I/O EXPANSION SUBSYSTEM
P = PRIMARY SLOT FOR THIS CARD
R = THIS CARD RESTRICTED TO THIS SLOT ONLY.
S = SUPPLIED EQUIPMENT.
WHEN 16-WORD AND 32-WORD MEMORIES ARE BOTH ON A SYSTEM, THE 32-WORD MEMORY HAS PRIORITY.
WHEN A MODULE DRIVE AND A CDD ARE ON THE SAME SYSTEM, THE MODULE DRIVE HAS THE HIGHEST PRIORITY SLOT.
THE 18/1500 ADAPTER CANNOT BE INSTALLED IN CARD SLOTS THAT HAVE DEADSTART CAPABILITY.
SLOT A,C,D,E, AND J HAVE DEADSTART.
SLOT H HAS AUTOLOAD WIRED.

†PART OF I/O EXPANSION SUBSYSTEM

2188-1

Figure 1-9. CYBER 18-25 PWA Slot Assignment (Sheet 1 of 2)

PROCESSOR CHASSIS MAP

AC	Z	Y	X	W	V	U	T	S	R	P	N	M	L	K	J	H	G	F	E	D	C	B	A	AA	AB
MAXIMUM	UP TO 64K BOARD (MAIN)	16K MEMORY		MEMORY INTERFACE, ADDRESS	MEMORY INTERFACE, DATA	OPEN	OPEN	OPEN	1700 TRANSFORM WITH READ-ONLY MEMORY	CONTROL 1	CONTROL 2	ARITHMETIC LOGICAL UNIT (ALU)	STATUS MODE INTERRUPT (SMI)	I/O-TTY CONTROLLER	A/Q	A/Q-DMA	MLIA COMMUNICATION I/F (PROCESSOR I/F)	MLIA COMMUNICATION I/F (OUTPUT LOOP I/F)	MLIA COMMUNICATION I/F (INPUT LOOP I/F)	NOT USED	NOT USED	NOT USED	NOT USED	NOT USED	NOT USED	NOT USED

MOS MEMORY (16 WORD)
MOS MEMORY (32 WORD)
ERROR CORRECTION CODE
BREAKPOINT CONTROLLER
MEMORY INTERFACE DATA
MEMORY INTERFACE ADDRESS
MICRO MEMORY, 512 WORDS
MICRO MEMORY, 2K WORDS
SCIENTIFIC OPTION, 512 WORDS
SCIENTIFIC OPTION, 2K WORDS
1700 TRANSFORM WITH ROM
CONTROL 1
CONTROL 2
ARITHMETIC LOGICAL UNIT
STATUS MODE INTERRUPT
I/O-TTY CONTROLLER

CARD READER-LINE PRINTER INTERFACE

FLEXIBLE DISK DRIVE
MLIA COMMUNICATION INTERFACE

CPU 2

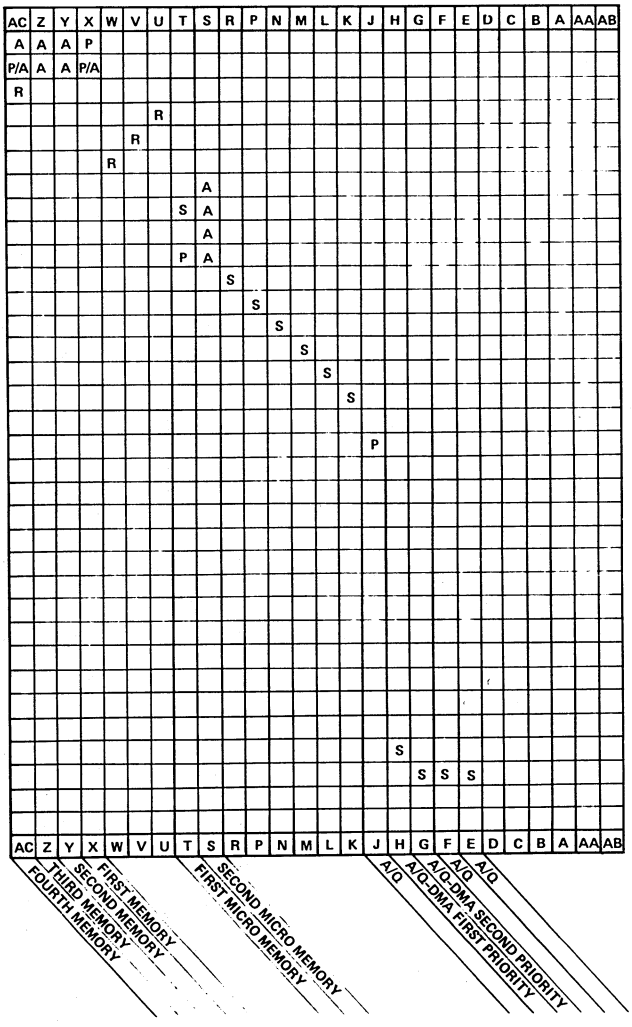

NOTES:
A = ALTERNATE SLOT FOR THIS CARD
P = PRIMARY SLOT FOR THIS CARD
R = THIS CARD IS RESTRICTED TO THIS SLOT ONLY.
S = SUPPLIED EQUIPMENT
WHEN 16-WORD AND 32-WORD MEMORIES ARE BOTH ON A SYSTEM, THE 32-WORD MEMORY HAS PRIORITY.
WHEN A MODULE DRIVE AND CDD ARE ON THE SAME SYSTEM, THE MODULE DRIVE HAS THE HIGHEST PRIORITY SLOT.
THE 18/1500 ADAPTER CANNOT BE INSTALLED IN CARD OTS THAT HAVE DEADSTART CAPABILITY.
SLOT J AND E HAVE DEADSTART.
SLOT H HAS AUTOLOAD WIRED.
SLOT A HAS DEADSTART ONLY ON THE BACKPLANE OF THE MODEL A.

2188A

Figure 1-9. CYBER 18-25 PWA Slot Assignment (Sheet 2 of 2)

The 128K MOS memory is installed in the timeshare processor. The 98K MOS memory is installed in the communications processor. The peripheral controllers for the supplied subsystems (except tape cassette) are installed in the timeshare processor. One tape cassette subsystem is attached to each processor; therefore, a controller is installed in each processor to control the associated tape cassette activity. The communications processor contains the communication multiplexer subsystem interface PWAs that provide the communications interface between the processor and loop multiplexer assemblies.

SYSTEM EXPANSION

A variety of optional CPU memory modules, controllers, and peripheral equipment are available for expanding the performance of CYBER 18 systems. These expansion options are listed in table 1-1.

PERIPHERAL EQUIPMENT

A variety of peripheral equipment is available to increase the versatility of the CYBER 18 processor. Interface between the processor and peripheral equipment is via an associated peripheral controller board that is housed in an allocated slot position within the processor chassis. The controller board interconnects to the processor via the backplane. Cables interconnect the peripheral equipment to the associated controller backplane terminals through push-on connectors. A single controller may provide interface for more than one peripheral equipment (for example, the card reader/line printer). In such cases, each peripheral equipment is individually connected to the controller backplane terminals. However, there are exceptions where the peripherals connect to a cable adapter that, in turn, connects to the controller backplane. Controllers, peripheral equipment, and cables applicable to the CYBER 18 systems are listed in table 1-2.

PRINTED WIRING ASSEMBLY ASSIGNMENT

The chassis backplane board slot positions K through Z and AC are prewired. These board slots can be utilized for their designated function only. Chassis board slots AA, AB, and A through J of the CYBER 18-5M, 18-10M, 18-20, 18-25, and 18-30 systems are allocated for peripheral controller boards. A/Q slot positions C, E, F, J, and AA of the CYBER 18-10M, 18-20, 18-25, and 18-30 systems can accept low-speed peripheral interface controllers, such as the card reader and line printer. The A/Q-DMA slot positions A, D, G, and H of the CYBER 18-10M, 18-20, 18-25, and 18-30 systems can accept high-speed peripheral interface controllers such as storage module drives, flexible disk drive, and so forth. Slot AB is wired to accept the magnetic tape transport (NRZI) only. Figures 1-5 through 1-10 illustrate the printed wiring assembly assignments applicable to the five typical CYBER 18 processor configurations.

PRINTED WIRING ASSEMBLY STANDARD SLOT ASSIGNMENT

Figures 1-5 though 1-10 also illustrate the primary and alternate slots available for use by the various controllers. In the case of the AB133-A, AA132-A, AA133-A, and AA134-A chassis, the backplane board slots are wired per section 20 of this manual. When duplication of peripheral controllers or installation of more than the basic expansion peripherals is desired for a certain system, slot assignments may be adjusted to accommodate the desired arrangment. Refer to figures 1-5 through 1-10 to locate alternate slot assignments and restrictions. It should be noted that the backplane changes may be required to accommodate the new slot configuration. (Refer to section 20 for interrupt information.)

BACKPLANE CONNECTING INFORMATION

The processor backplane consists of a printed wiring assembly to which wire-wrap connections are made. Pins from the connectors that provide connection to the board positions have been pressed though the backplane board and serve as the wire-wrap pins on the backplane. Figure 1-11 illustrates the processor chassis backplane connector designations and pin assignment. Each connector is made up of 102 pins, so the two connectors give a total of 204 pins for each board position. Each board position is lettered A, B, C, and so forth. The two rows of pins for each board position are numbered 1 through 102 on the left side and 201 through 302 on the right side as viewed from the rear. In most cases, signal cables from the peripheral devices connect directly to the backplane pins of the peripheral controller location with a Berg connector. However, with some controllers the signal cables connect to a cable adapter, which, in turn, connects to the controller backplane.

EQUIPMENT AND INTERRUPT NUMBER ASSIGNMENTS

Equipment numbers are set by either wire jumpers or miniature toggle switches on the peripheral equipment controller printed wiring assembly. An exception to this is the ADT magnetic tape transport controller printed wiring assembly, where the equipment number is backplane-wire selected. Refer to the appropriate peripheral equipment section of this manual for the setting procedures. Interrupt number selection for each peripheral equipment controller is made by backplane wire jumpers from the controller slot location to the status mode interrupt (SMI) board, slot L.

PROCESSOR CHASSIS MAP

AC	Z	Y	X	W	V	U	T	S	R	P	N	M	L	K	J	H	G	F	E	D	C	B	A	AA	AB
MAXIMUM	UP TO 128K WORDS	BOARD (MAIN)	64K MEMORY	MEMORY INTERFACE, ADDRESS†	MEMORY INTERFACE, DATA†	OPEN	OPEN	OPEN	1700 TRANSFORM WITH READ-ONLY MEMORY†	CONTROL 1††	CONTROL 2†	ARITHMETIC LOGICAL UNIT (ALU)†	STATUS MODE INTERRUPT (SMI)†	I/O-TTY CONTROLLER†	A/Q	A/Q-DMA	A/Q-DMA	A/Q	A/Q	A/Q-DMA	A/Q	OPEN	A/Q-DMA	A/Q	A/Q (SPECIAL)

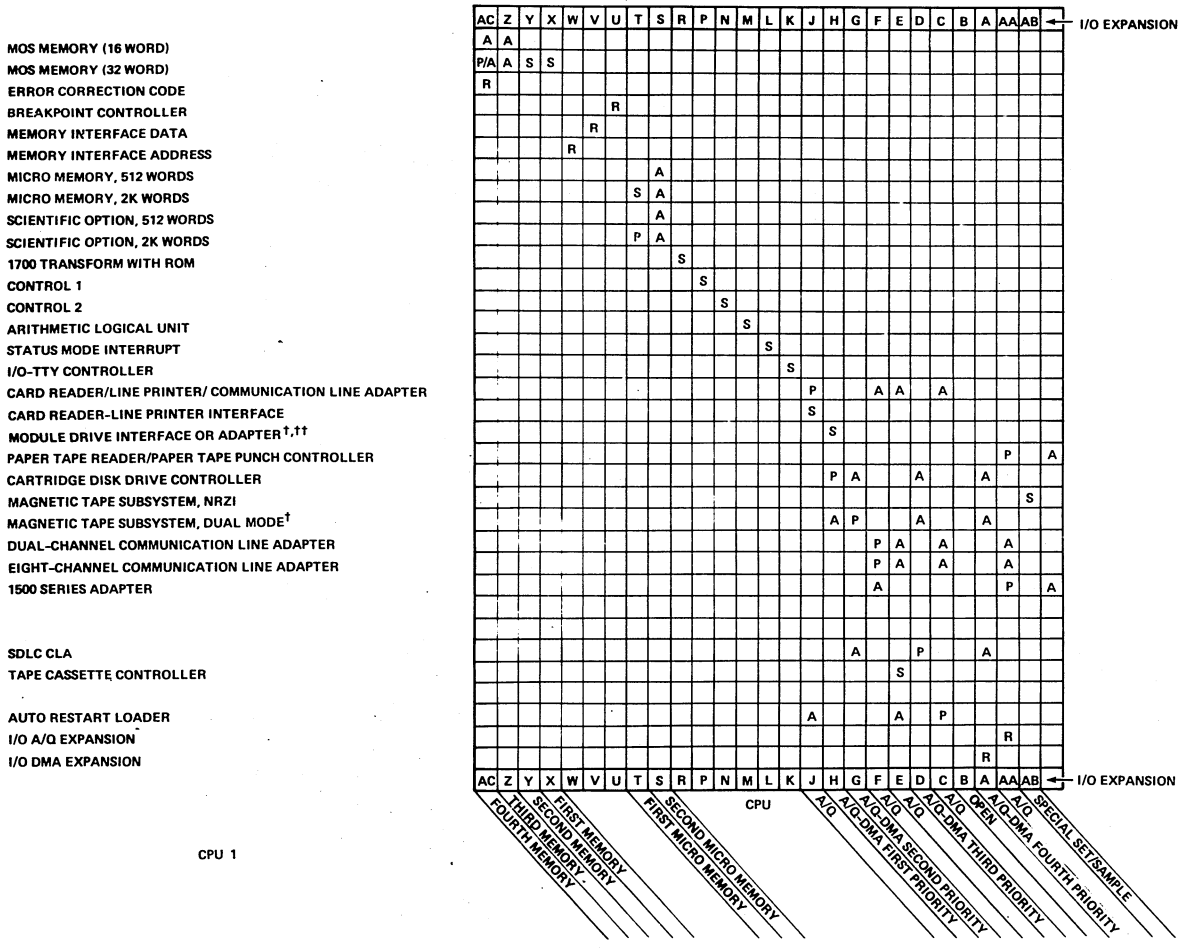

MOS MEMORY (16 WORD)
MOS MEMORY (32 WORD)
ERROR CORRECTION CODE
BREAKPOINT CONTROLLER
MEMORY INTERFACE DATA
MEMORY INTERFACE ADDRESS
MICRO MEMORY, 512 WORDS
MICRO MEMORY, 2K WORDS
SCIENTIFIC OPTION, 512 WORDS
SCIENTIFIC OPTION, 2K WORDS
1700 TRANSFORM WITH ROM
CONTROL 1
CONTROL 2
ARITHMETIC LOGICAL UNIT
STATUS MODE INTERRUPT
I/O-TTY CONTROLLER
CARD READER/LINE PRINTER/ COMMUNICATION LINE ADAPTER
CARD READER-LINE PRINTER INTERFACE
MODULE DRIVE INTERFACE OR ADAPTER†,††
PAPER TAPE READER/PAPER TAPE PUNCH CONTROLLER
CARTRIDGE DISK DRIVE CONTROLLER
MAGNETIC TAPE SUBSYSTEM, NRZI
MAGNETIC TAPE SUBSYSTEM, DUAL MODE†
DUAL-CHANNEL COMMUNICATION LINE ADAPTER
EIGHT-CHANNEL COMMUNICATION LINE ADAPTER
1500 SERIES ADAPTER

SDLC CLA
TAPE CASSETTE CONTROLLER

AUTO RESTART LOADER
I/O A/Q EXPANSION
I/O DMA EXPANSION

CPU 1

NOTES:
A = ALTERNATE SLOT FOR THIS CARD
P = PRIMARY SLOT FOR THIS CARD
R = THIS CARD IS RESTRICTED TO THIS SLOT ONLY.
S = SUPPLIED EQUIPMENT
WHEN 16-WORD AND 32-WORD MEMORIES ARE BOTH ON A SYSTEM, THE 32-WORD MEMORY HAS PRIORITY.
WHEN A MODULE DRIVE AND A CDD ARE ON THE SAME SYSTEM, THE MODUEL DRIVE HAS THE HIGHEST PRIORITY SLOT.
THE 18/1500 ADAPTER CANNOT BE INSTALLED IN CARD SLOTS THAT HAVE DEADSTART CAPABILITY.
SLOT J AND E HAVE DEADSTART.
SLOT H HAS AUTOLOAD WIRED.
SLOTS D AND C HAVE DEADSTART ONLY ON THE BACKPLANE OF MODEL B.
SLOT A HAS DEADSTART ONLY ON THE BACKPLANE OF THE MODEL A.

†SLOT D CAN BE AN ALTERNATE FOR THE MODEL A BACKPLANE ONLY
††SLOT A CAN BE AN ALTERNAT FOR THE BACKPLANE OF MODEL B:
2189

Figure 1-10. CYBER 18-30 PWA Slot Assignment (Sheet 1 of 2)

AC	MAXIMUM
Z	UP TO 128K WORDS
Y	BOARD (MAIN)
X	48K MEMORY
W	MEMORY INTERFACE, ADDRESS
V	MEMORY INTERFACE, DATA
U	OPEN
T	OPEN
S	OPEN
R	1700 TRANSFORM WITH READ-ONLY MEMORY
P	CONTROL 1
N	CONTROL 2
M	ARITHMETIC LOGICAL UNIT (ALU)
L	STATUS MODE INTERRUPT (SMI)
K	I/O-TTY CONTROLLER
J	A/Q
H	A/Q-DMA
G	MLIA COMMUNICATION I/F (PROCESSOR I/F)
F	MLIA COMMUNICATION I/F (OUTPUT LOOP I/F)
E	MLIA COMMUNICATION I/F (INPUT LOOP I/F)
D	NOT USED
C	NOT USED
B	NOT USED
A	NOT USED
AA	NOT USED
AB	NOT USED

MOS MEMORY (16 WORD)
MOS MEMORY (32 WORD)
ERROR CORRECTION CODE
BREAKPOINT CONTROLLER
MEMORY INTERFACE DATA
MEMORY INTERFACE ADDRESS
MICRO MEMORY, 512 WORDS
MICRO MEMORY, 2K WORDS
SCIENTIFIC OPTION, 512 WORDS
SCIENTIFIC OPTION, 2K WORDS
1700 TRANSFORM WITH ROM
CONTROL 1
CONTROL 2
ARITHMETIC LOGICAL UNIT
STATUS MODE INTERRUPT
I/O-TTY CONTROLLER

CARD READER-LINE PRINTER INTERFACE

TAPE CASSETTE CONTROLLER
MLIA COMMUNICATION INTERFACE

CPU 2

2190

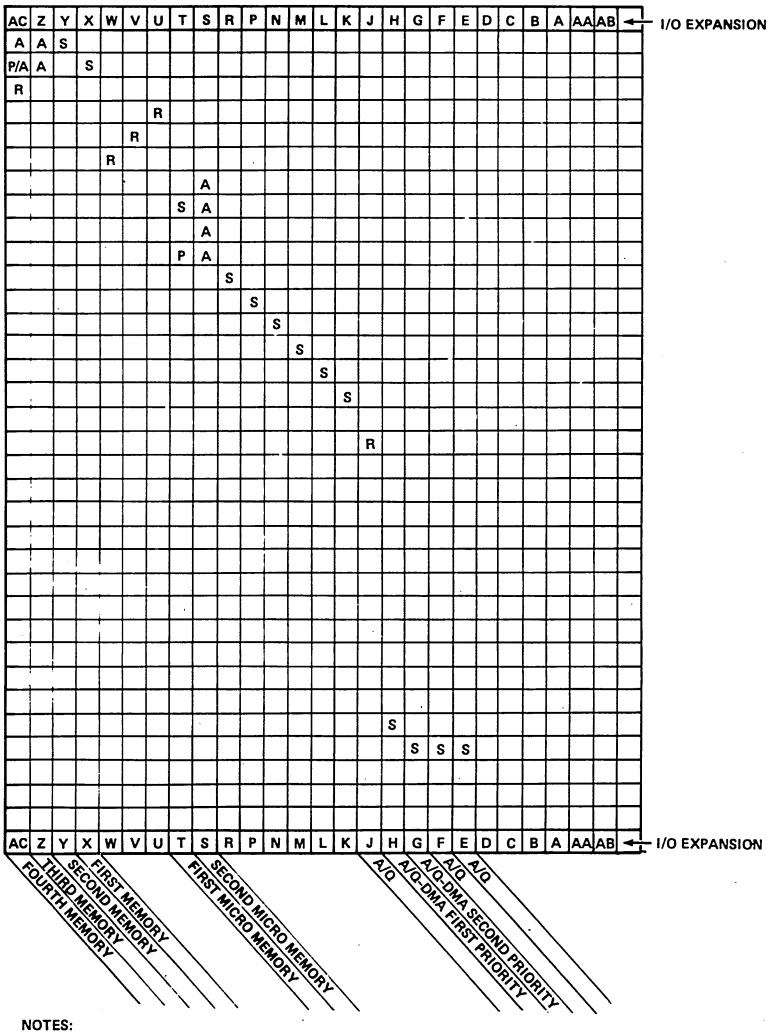

NOTES:
A = ALTERNATE SLOT FOR THIS CARD
P = PRIMARY SLOT FOR THIS CARD
R = THIS CARD IS RESTRICTED TO THIS SLOT ONLY.
S = SUPPLIED EQUIPMENT
WHEN 16-WORD AND 32-WORD MEMORIES ARE BOTH ON A SYSTEM, THE 32-WORD MEMORY HAS PRIORITY.
WHEN A MODULE DRIVE AND A CDD ARE ON THE SAME SYSTEM, THE MODULE DRIVE HAS THE HIGHEST PRIORITY SLOT.
THE 18/1500 ADAPTER CANNOT BE INSTALLED IN CARD SLOTS THAT HAVE DEADSTART CAPABILITY.
SLOT J AND E HAVE DEADSTART.
SLOT H HAS AUTOLOAD WIRED

Figure 1-10. CYBER 18-30 PWA Slot Assignment (Sheet 2 of 2)

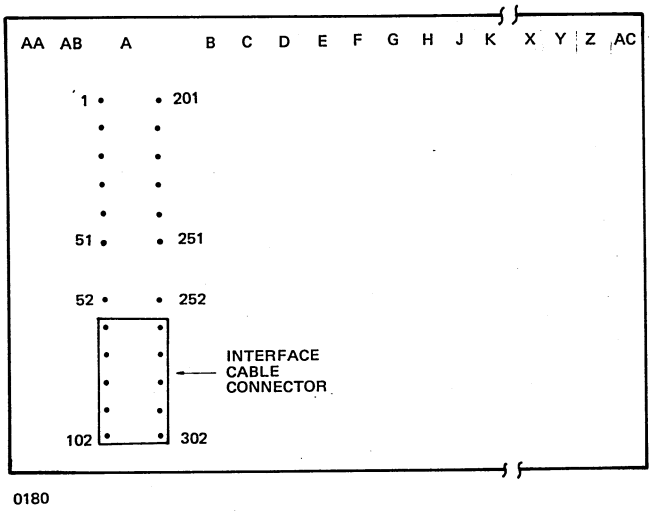

Figure 1-11. Processor Backplane Slot Description and Pin Assignment

Table 1-3 lists the standard equipment and interrupt number assignments. It also lists, for reference purposes, the backplane pin number assignment of the processor status mode interrupt board micro- and macro-interrupts. Section 20 provides a detailed description of system interrupt and equipment number assignments.

POWER REQUIREMENTS

The CYBER 18 processor is designed to operate from a power source of 102 to 128 V ac, single-phase, 48 to 63 Hz input power (table 1-4). For site power sources other than stated, a power conversion transformer must be installed. Refer to the applicable section of this manual for installation procedures for the power conversion transformer.

EQUIPMENT WEIGHT

Refer to table 1-5 for the weight of the basic systems, controllers, and peripheral equipment. To obtain the total weight of the assembled cabinet, add the weight of the basic system or cabinet and all internal assemblies.

OPERATING ENVIRONMENT

Table 1-5 indicates the minimum and maximum temperature and humidity conditions at which the equipment is designed to operate.

INSTALLATION TOOLS

Tools required to uncrate, move, and position the processor and associated peripheral equipment are listed in table 1-6 and the peripheral equipment sections of this manual. Table 1-6 lists items that are general to the entire complement of the equipment. The items listed in the various sections are items required for that particular equipment.

TEST EQUIPMENT

To verify that proper primary power is available at the power source and that dc power supplies provide correct output, a standard volt-ohmmeter is sufficient. Should problems occur during system checkout, an oscilloscope may be required. A Tektronix Model 546 with a sweep-calibrated dual-trace plug-in such as a Model 1A1 or equivalent should be used.

SHIPPING DAMAGE INSPECTION

As each equipment is uncrated from its shipping container, it should be inspected for shipping damage. If damage is evident, notify the carrier and your Control Data representative immediately.

PROTECTIVE GROUNDING SYSTEM

The protective grounding system must protect computer-room personnel from the potential hazard of electrical shock and must protect the equipment from damage in the event of an electrical malfunction.

- An insulated grounding conductor that is identical in size and insulation to the grounded and ungrounded branch-circuit supply conductors, except that it is green or green with one or more yellow tracers, is to be installed as part of the branch circuit that supplies the unit or system.
- The grounding conductor mentioned above is to be grounded at the service equipment.
- The attachment-plug receptacles in the vicinity of the unit or system are all to be of a grounding type, and the grounding conductors serving these receptacles are to be connected to the grounding connector that serves the unit or system.

The grounding system must connect all of the computer system cabinets, switch boxes, frequency converters, air conditioners, and computer-related equipment to an earth ground. The conductors for the ground connections can be the green wires of the equipment power cables. Under no circumstances shall the neutral wires (white, blue, or gray) and ground wires (green) of the power cables be electrically connected, except at the building service equipment.

EMC GROUNDING SYSTEMS

The normal EMC grounding technique for shielded signal cables is the attachment of the cable shield to the equipment frame at the point of entrance. This is accomplished by the use of U-bolt clamps around the

TABLE 1-3. STANDARD EQUIPMENT CODE AND INTERRUPT NUMBER ASSIGNMENTS

Peripheral	Equipment Code	Macro Interrupt†		Micro Interrupt†	
		No.	Pin††	No.	Pin††
Console display	1	1	269	1	27
I/O Expansion Subsystem	1	-	-	-	-
Real-time clock	1	8	73	8	30
CYBER 18/1500 Series adapter	2	2	270	N/A	-
	3	3	70	N/A	-
Paper tape reader, paper tape punch, card punch	2	2	270	2	32
Line printer	4	4	72	4	28
Timeshare application	5	5	272	5	31
Restart loader	6	6	271	N/A	-
Flexible disk drive	7	7	71	N/A	-
Tape cassette†††	7	7	71	7	228
Magnetic tape transport (NRZI) (ADT)	9	9	274	0/9	227/ 230
Communication line adapter (dual-channel or eight-channel)	10	10	74	10	229
Buffered communication line adapter	10	10	74	N/A	-
Communication line adapter (communication line adapter section of card reader/line printer/ communication line adapter)	10	10	74	10	229
Card reader	11	11	273	11	29
Magnetic tape transport (dual) (A/Q-DMA)	12	12	277	N/A	-
Breakpoint panel	N/A	N/A	-	12	33
Synchronous data link controller communication line adapter	13	13	276	N/A	-
Module drive or cartridge disk drive	14	14	77	N/A	-
Not assigned	15	15	275	N/A	234
Protect, parity, and power failure (internal)	N/A	0	69	N/A	227

†For determining interrupt and equipment number assignments for systems with duplicate devices or where interrupt and equipment number conflicts exist, refer to section 20.

††Backplane location slot L

†††When a cassette and flexible disk drive are both on the same system, the cassette uses interrupt 6.

TABLE 1-4. AC POWER REQUIREMENTS

Equipment	Frequency (nominal)	Voltage (nominal)	Amperes	kVA	Heat Dissipation (kW/Btu/h)
CYBER 18-5M†	50/60 Hz	120	12.0	1.4	1.12/3824
CYBER 18-10M†	50/60 Hz	120	12.0	1.4	1.12/3824
CYBER 18-20†	50/60 Hz	120	12.0	1.4	1.12/3824
CYBER 18-25†	50/60 Hz	120	20.0	2.4	1.92/6556
CYBER 18-30	50/60 Hz	120	20.0	2.4	1.92/6556
Console display (CC555)	50/60 Hz 50/60 Hz	120 220	0.55 0.55	0.07 0.12	0.061/191 0.10/331
Console display (CC614)	50/60 Hz 50 Hz	120 220	1.8 1.0	0.22 0.22	0.18/615 0.18/615
Display terminal (CC628)	50/60 Hz 50/60 Hz 50/60 Hz	120 220 240	0.58 0.29 0.29	69.6 63.8 69.6	0.08/270 0.08/270 0.08/270
Control unit (module drive)	60 Hz 50 Hz	120 220	3.0 3.0	0.36 0.66	0.58/1967 0.53/1803
Module drive (BJ701)	60 Hz 50 Hz	120 220	6.6 5.0	0.8 1.1	9.96/3278 0.88/3005
Module drive (BJ402)	60 Hz 50 Hz	208 220	8.0 9.5	1.7 2.1	1.19/4063 1.24/4233
Mini-module drive (BZ403)	60 Hz 50 Hz	120 220	3.7 2.0	0.41 0.61	0.35/1195 0.37/1263
Cartridge disk drive	50/60 Hz	100-250	5.6-2.3	0.57	0.31/1059
Loop multiplexer	50/60 Hz	120	7.0	0.84	0.67/2295
Magnetic tape transport (seven- or nine-track, PE or NRZI)	50/60 Hz	120	5.0	0.6	0.80/2732
Magnetic tape formatter	50/60 Hz	120	1.6	0.19	0.18/600
Power conversion transformer (XA118-A)	50/60 Hz	85-250	60-20	5.1	4.08/13932
Power conversion transformer (GE203-A)	50/60 Hz	198-257	10	2.4	1.92/6556
Power conversion transformer (GK205-A)	50/60 Hz	198-257	10	2.4	1.92/6556
Printer (300 lines/min.)	60 Hz 50 Hz	120 220	6.0 3.0	0.72 0.66	0.58/1967 0.53/1803
Printer (600 lines/min.)	50/60 Hz 50/60 Hz	120 220	10.0 5.0	1.2 1.1	0.96/3278 0.88/3005
Printer (900 lines/min.)	50/60 Hz 50/60 Hz	120 220	10.0 5.0	1.2 1.1	0.96/3278 0.88/3005
Printer (70 lines/min.)	60 Hz 50 Hz	120 220	2.8 1.53	0.34 0.34	0.27/929 0.27/929
Flexible disk drive††	50/60 Hz	120	1.5	0.18	0.14/492
Flexible disk drive power supply	50/60 Hz	120	3.0	0.36	0.23/785

†Cabinet with processor and full complement of printed wiring assemblies

††Applies to two units per installation; half if only one unit per installation

TABLE 1-4. AC POWER REQUIREMENTS (Contd)

Equipment	Frequency (nominal)	Voltage (nominal)	Amperes	kVA	Heat Dissipation (kW/Btu/h)
Card reader	50/60 Hz	120	4.0	0.48	0.38/1311
Tape cassette power supply	50/60 Hz	120	3.0	0.36	0.23/785
Output card punch	60 Hz 50 Hz	115 220	7.24 3.79	0.83 0.83	0.66/2267 0.66/2267
CYBER 18/1500 Adapter termination power supply	50/400 Hz	120	3.0	0.36	0.23/785
I/O Expansion Subsystem	50/60 Hz	120	10.0	1.20	0.91/3107

TABLE 1-5. EQUIPMENT HANDLER REQUIREMENT, WEIGHT (UNCRATED), AND OPERATING ENVIRONMENT

Equipment	Equipment Handlers	Weight (lb/kg)	Operating Environment	
			Temperature	Humidity
CYBER 18-5M	3†	475/215	15-32°C	20-80%
CYBER 18-10M	3†	475/215	15-32°C	20-80%
CYBER 18-20	3†	475/215	15-32°C	20-80%
CYBER 18-25	4†	950/431	15-32°C	20-80%
CYBER 18-30	4†	950/431	15-32°C	20-80%
Console display (CC555)	1	51/23	10-40°C	20-80%
Console display (CC614)	1	55/25	15-32°C	20-80%
Display terminal (CC628)	1	37/16.78	10-40°C	20-80%
CYBER 18-1500 Series adapter termination power supply	1	10/4.5	-20-71°C	20-80%
Tape cassette transport	1	5/2.3	15-32°C	20-80%
Card reader (300 or 600 card/min.)	1	55/25	15-32°C	20-80%
I/O Expansion Subsystem (Vert. Cab.)	2†	350/159	15-32°C	20-80%
Line printer (900 line/min.)	2†	350/159	10-35°C	20-80%
Line printer (600 line/min.)	2†	300/136	10-35°C	20-80%
Line printer (300 line/min.)	2†	500/227	15-32°C	20-80%
Line printer (70 line/min.)	2	98/45	10-35°C	20-80%
Magnetic tape transport (seven-track or nine-track, PE or NRZI)	2†	225/102	15-32°C	20-80%
Magnetic tape formatter	1	25/11.2	5-50°C	10-90%
Module drive (40/80 megabytes)	2†	345/156	15-32°C	20-80%
Module drive (300 megabytes)	2†	550/252	15-32°C	20-80%
Mini-module drive	1†	100/45	15-32°C	20-80%

† Refer to table 1-6 and the applicable section of this manual for additional handling requirements.

TABLE 1-5. EQUIPMENT HANDLER REQUIREMENT, WEIGHT (UNCRATED), AND OPERATING ENVIRONMENT (Contd)

Equipment	Equipment Handlers	Weight (lb/kg)	Operating Environment	
			Temperature	Humidity
Control unit (module drive)	2†	82/37	15-32°C	20-80%
Cartridge disk drive	2†	225/102	15-32°C	10-80%
Flexible disk drive	1†	12/5.44	15-32°C	20-80%
Card punch	2†	260/118	5-46°C	8-90%
Power conversion transformer	1†	110/50	0-55°C	0-95%
Equipment cabinet	2†	265/120.5	0-55°C	0-95%

†Refer to table 1-6 and the applicable section of this manual for additional handling requirements.

TABLE 1-6. TOOLS REQUIRED

Item	Name	Application
1	Metal shears	Cutting of steel and/or fiber shipping bands
2	Claw hammer	Removal of wood blocks and opening crates
3	Roller lift (ROL-A-LIFT) (two required)	Handling of processor cabinets, vertical cabinets, printers, and other heavy equipments.
4	Screwdriver, medium Phillips	Various
5	Screwdriver, common, medium size	Various
6	Screwdriver, common, light duty	Power supply adjustment
7	Simpson Model 270 Multimeter (or equivalent)	Measuring site ac voltages and dc power supply outputs

exposed cable shield or by terminating the cable shield to the front ground pin of the equipment signal connector block.

Some equipments require additional techniques for maintaining proper EMC integrity. When equipment is shipped without shielded cables they must be grounded in a daisy-chain configuration. The daisy-chain grounding is implemented by using flat braided shielding from earth ground to each unit interconnected by the unshielded cables.

Equipments shipped with shielded cables do not require braid grounding.

NOTE

Each length of braid should be as short as physically possible.

SPECIAL HANDLING OF ELECTROSTATIC-SENSITIVE PRINTED WIRING ASSEMBLIES

Micro processor and peripheral controller printed wiring assemblies with red solder masks contain MOS or electrostatic-sensitive devices. Exercise extreme caution when handling these devices to avoid damage. Common practices, such as touching a grounded surface before handling, inserting in antistatic or conductive bags for storage or transfer, and repairing only at properly equipped and grounded work stations, must be strictly followed.

SPECIAL HANDLING OF MOS MEMORY ARRAY PRINTED WIRING ASSEMBLIES

Do not remove or install MOS memory array printed wiring assemblies in the processor with power applied to the processor logic cage. With the exception of the MOS memory array PWA's, the remaining processor and I/O controller PWA's may be removed or installed in the processor cage with power applied.

FCC EMI VERIFICATION

Late model CYBER 18 computer systems have been verified to comply with the limits for a class B computing device, pursuant to Subpart J of Part 15 of FCC rules. Only parts (terminals, filters, cables and so forth) verified to comply with these FCC rules may be used on verified systems. Verification is reflected by a series code change to the equipment at the time verification became effective and includes the addition of an FCC EMI tested/complies warning label to the system cabinet. When installing either new subsystems or replacement parts where interchangeable items are indicated in the parts list, use only those items designated as FCC EMI qualified on verified systems. Use of non-qualified parts on verified systems will void system verification. Use of either qualified or non-designated items is permitted on systems which have not been verified.

To determine the verification status of a specific system, inspect the processor cabinet for the presence of an FCC EMI tested/complies warning label. Verification status may also be determined by checking the processor series code against the manual to equipment level correlation sheet in the front of the system hardware maintenance manual or field repair guide.

PROCESSOR UNIT 2

This section describes the procedure for the mechanical and electrical site installation of the processor unit.

PARTS AND EQUIPMENT

The processor unit is received assembled. Check the packing slip for the equipment supplied.

PROCESSOR AND DESK CONSOLE

UNCRATING

The uncrating of the processor and desk console are described below (see figure 2-1).

1. Cut the banding and remove the corrugated cover.

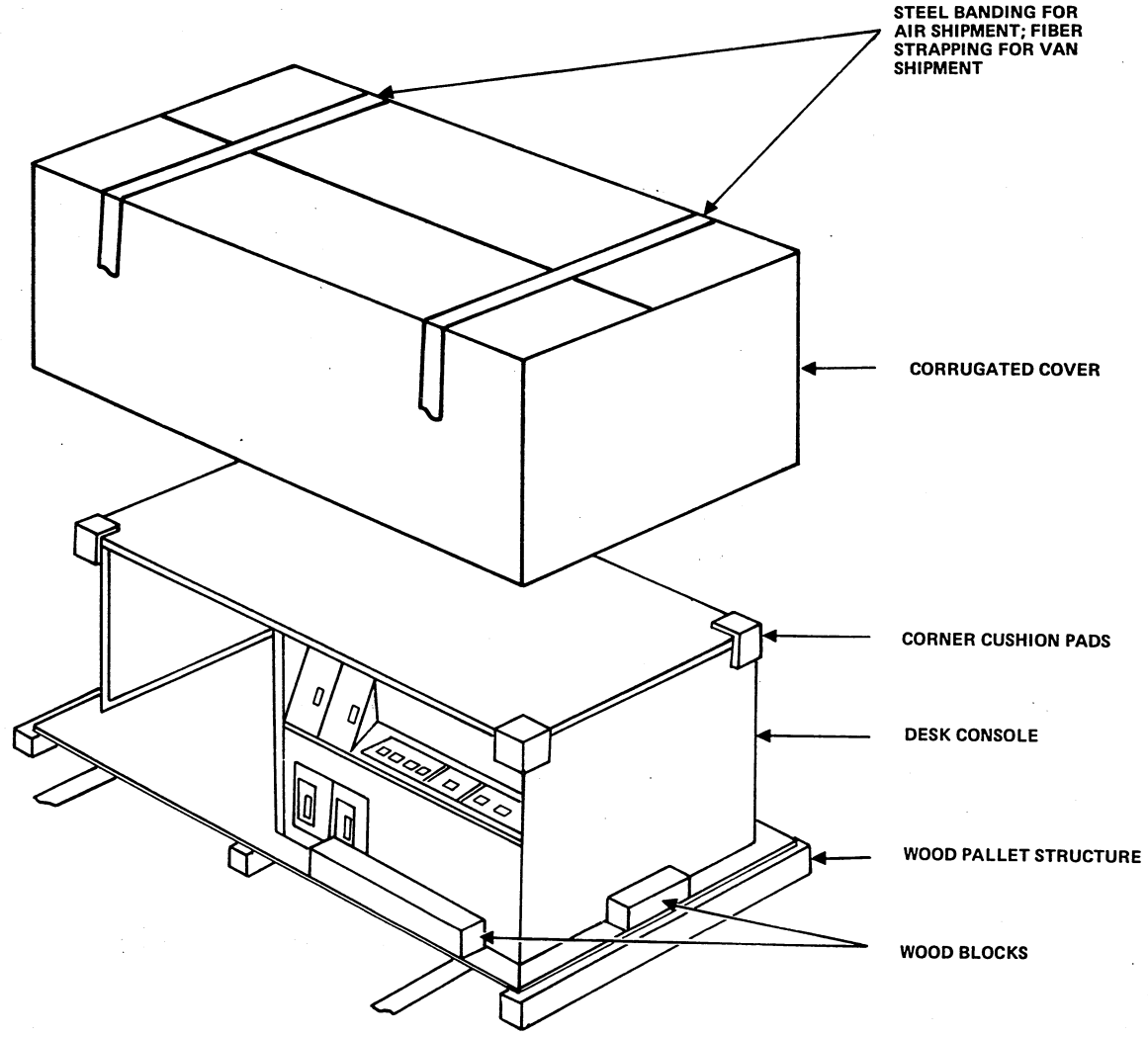

Figure 2-1. Typical CYBER 18 Processor Uncrating Diagram

2. Remove the corner cushion pads and plastic dust cover from the desk console.

3. Remove the wood blocks from the wood pallet structure.

CAUTION

When lifting the processor from the pallet, do not use the table top as a hand grip.

4. Remove the cabinet from the wood pallet structure by setting the roller lifts at the front and rear of the processor cabinet. Lift the cabinet above the pallet and slide the pallet out from under the cabinet.

5. Roll the cabinet to its final operating location and lower it to the floor. Remove the roller lifts.

6. Remove the banding and tape from the front and rear access doors.

The CYBER 18-25/18-30 cabinet is uncrated in the same manner, except for the location of the roller lift. To lift the CYBER 18-25/18-30, the lifts should be placed at the center posts of the front and rear of the cabinet.

ASSEMBLY

The CYBER 18 processors are received assembled. The CYBER 18-5M/10M/20 processors are received with a separate table top extension (AV102-A) that is assembled to the processor cabinet on site. Refer to figure 2-2, and assemble as follows:

1. Remove the side panel selected for mounting and the support flange. (Discard the three mounting screws.)

2. a. Loosen the 8-32 screws that secure the EMI combo strips to the vertical posts of the cabinet frame.

   b. Readjust the two vertical EMI combo strips so the shielding material extends 0.14 inch (3.56 millimeters) at the top of the cabinet post and 0.06 inch (1.54 millimeters) at the bottom (see detail A of figure 2-2).

   c. Tighten the EMI combo strip mounting screws.

   d. Refer to detail B of figure 2-2. Install the table top mounting bracket and the support flange (removed in step 1) using three 6-32 screws. Tighten screws finger tight only.

   e. Install the side panel, and adjust the support flange for a tight fit.

   f. Remove the side panel carefully, and tighten the mounting screws.

3. To avoid scratching the finish, place the table top face down on a protective surface; install the table top support approximately 10 inches (254 millimeters) from the front edge of the table top using six 10-32 screws and six no. 10 lock washers.

4. Position the table top and support assembly (step 3) on the mounting bracket (step 2d), and assemble with three 10-32 screws and three number 10 washers per detail B of figure 2-2. Adjust the leveling pads on the table top support as required before final tightening of the mounting screws.

5. Install the side panel.

CRATING

Crating the equipment for shipment is performed in the reverse order of the uncrating instructions.

POWER REQUIREMENTS

Refer to section 1 for the system power requirements. Assure that the supply circuit can accommodate this additional load. Change the supply circuit as necessary to provide the power requirement. All equipment is supplied with three-prong ac plugs for 120 V ac operation; ac plugs for 220 V ac operation must be obtained at the site. If the site is not equipped with three-prong receptacles, replace the receptacles. Do not use adapters. All peripheral equipment must obtain ac power from the site power source, except when the power conversion transformer is used.

POWER CABLING

CAUTION

Ensure that all power switches are turned off.

For the processor unit main breaker and main power switches, refer to figures 2-3 and 2-4. For the peripherals, refer to the appropriate sections.

Refer to figures 2-5 and 2-6 for typical power connections. After verifying that the power source rating agrees with the primary power rating indicated on the name plate tag, connect the power cord to the site power outlet.

SIGNAL CABLING

No internal signal cabling between the processor boards is required. Refer to figures 2-7 through 2-11 for typical signal connections from the processor to the peripheral equipment.

For installation of the CYBER 18-5M basic operators panel (BOP), refer to section 29.

SWITCH/JUMPER VERIFICATION

To verify that the switches and jumpers on each printed wiring assembly are in their proper positions, perform the following steps. The settings for expansion and peripheral

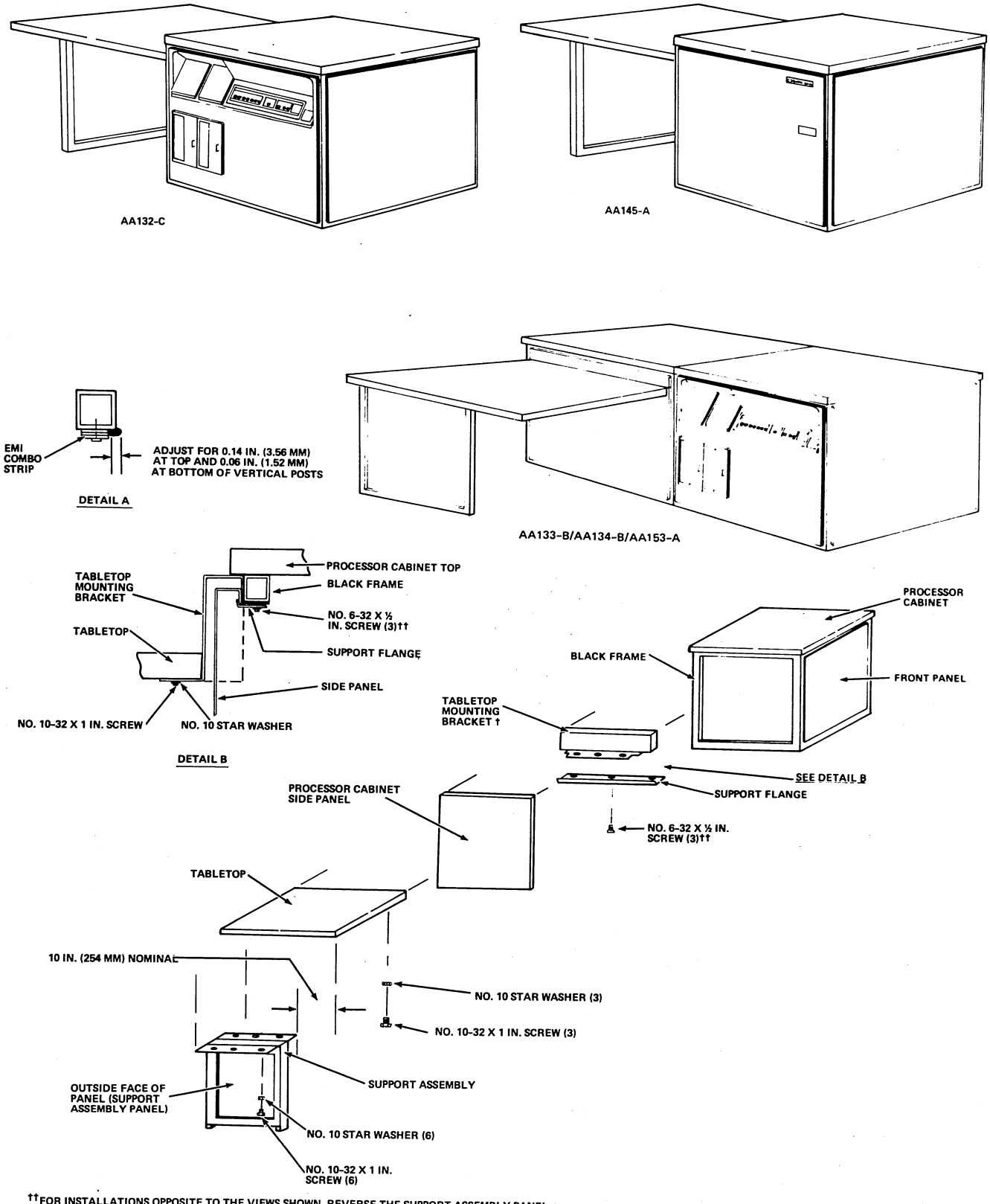

Figure 2-2. AV102 Table Top Installation

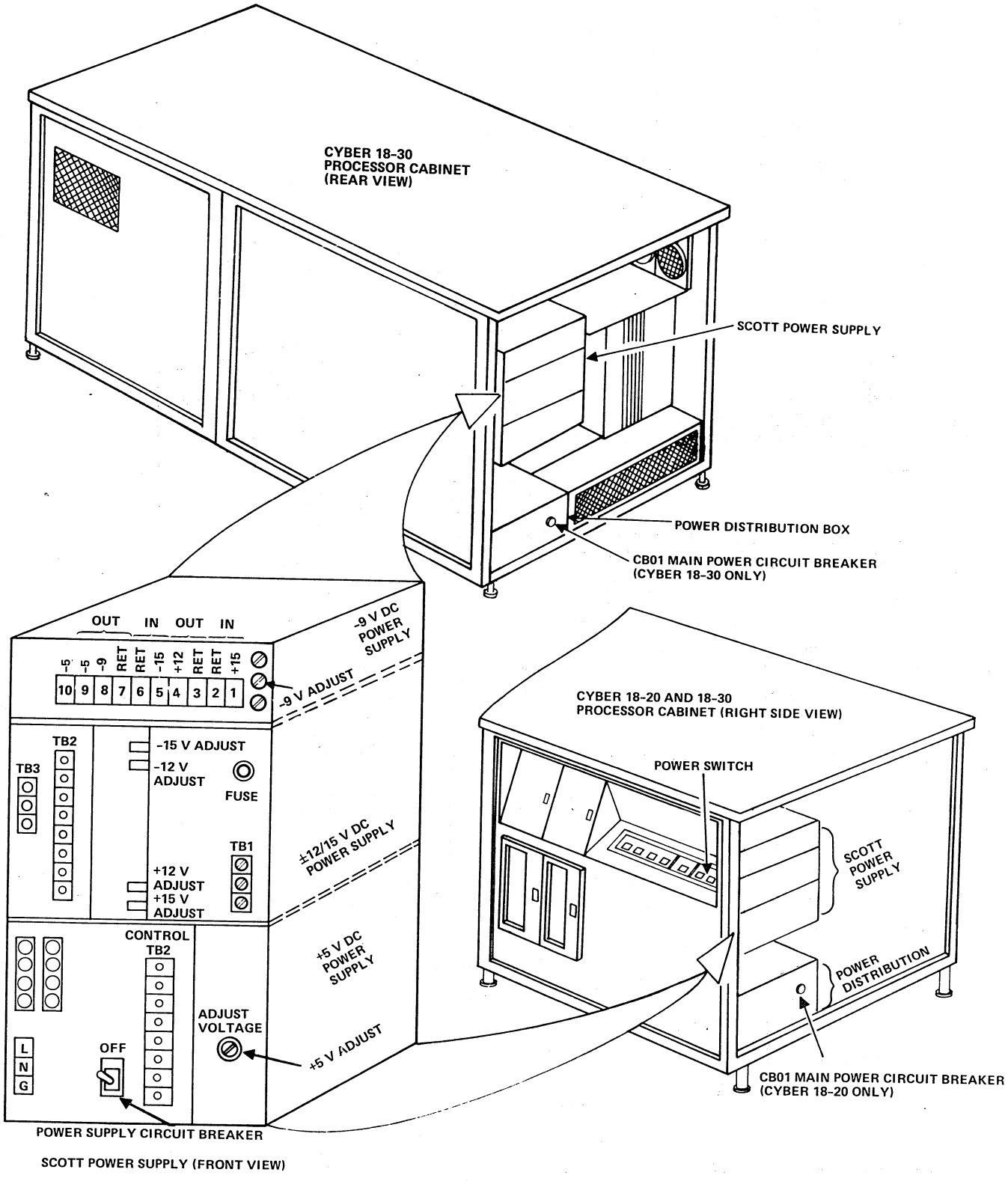

Figure 2-3. CYBER 18 Chassis Configuration with Scott Power Supply Installation

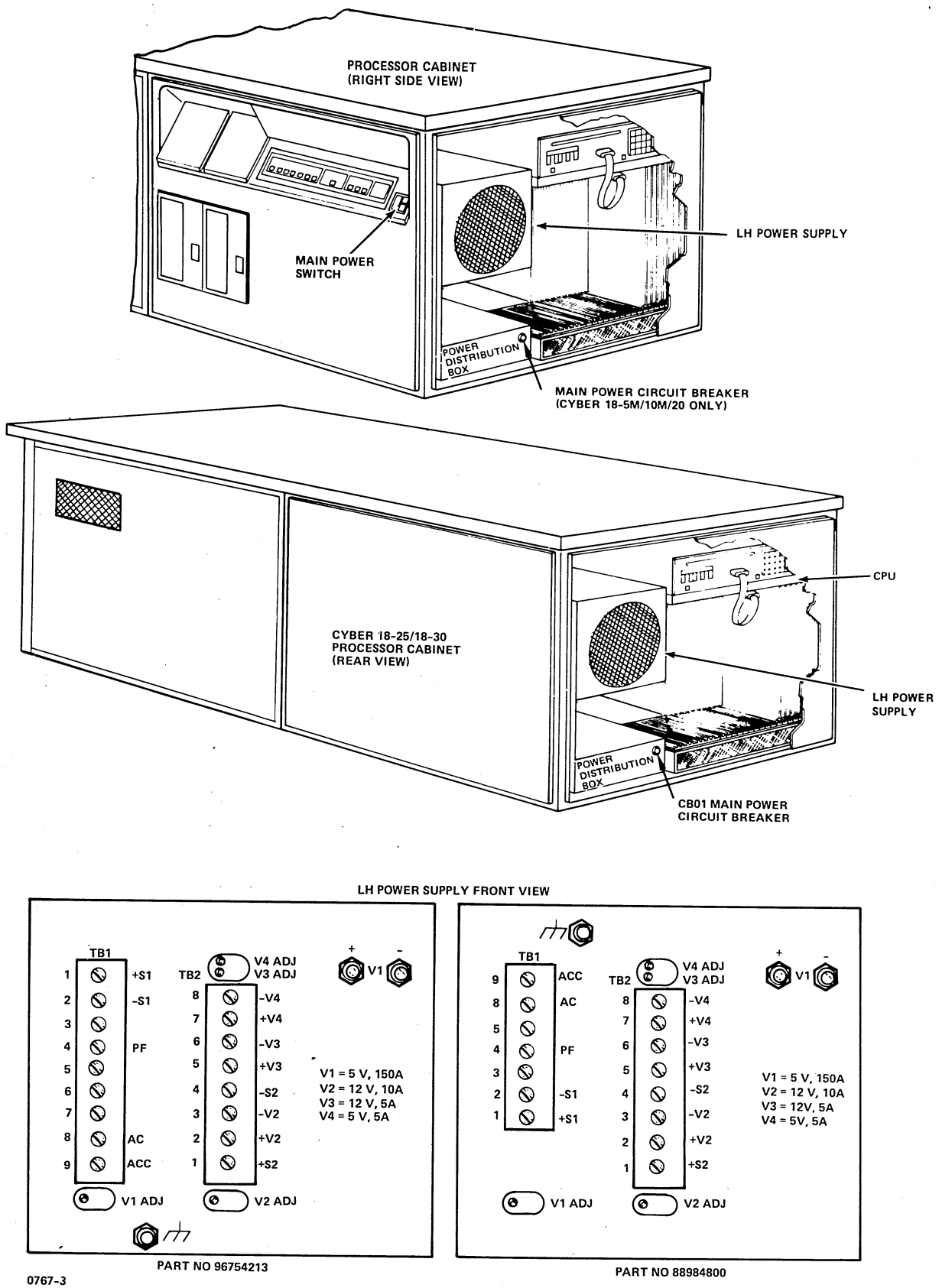

Figure 2-4. CYBER 18 Chassis Configuration with LH Power Supply

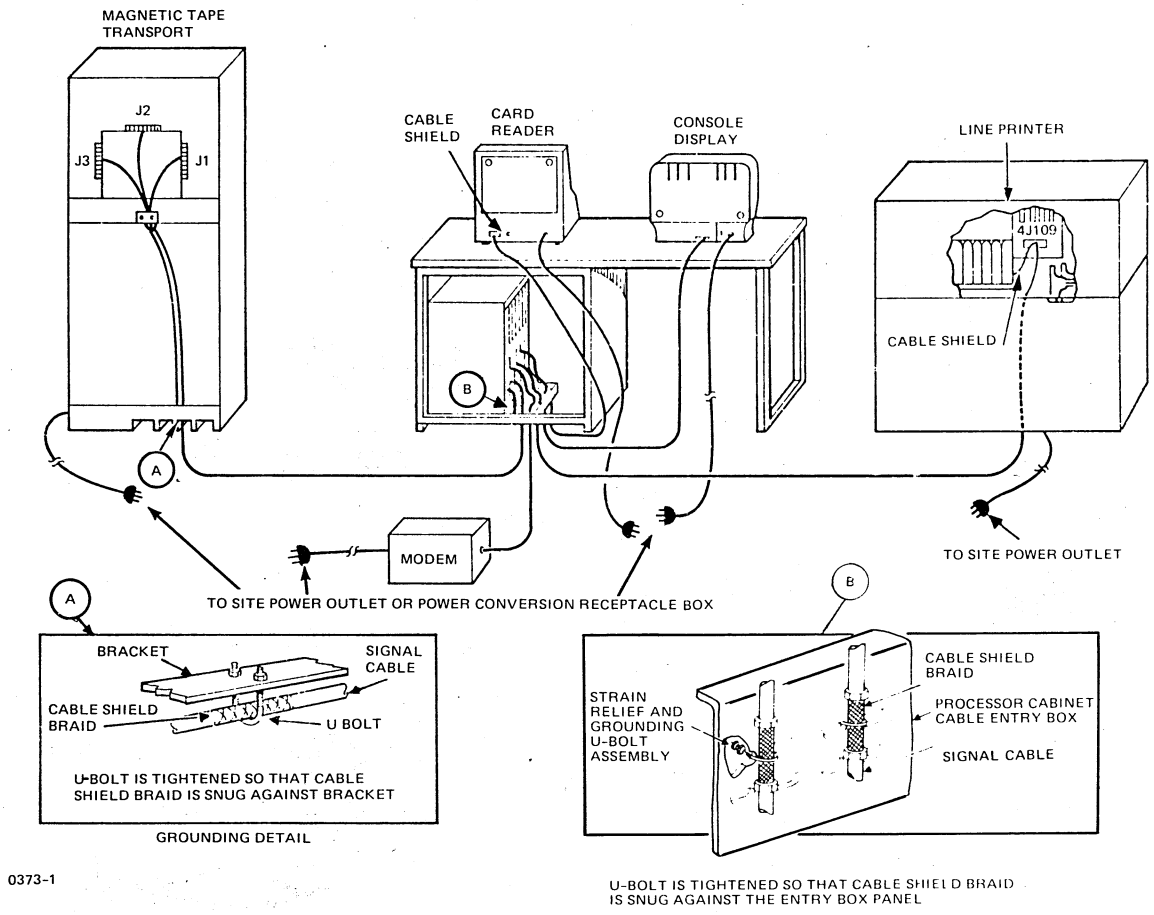

Figure 2-5. Typical CYBER 18 Single Processor System

controllers should also be verified by referring to the appropriate section of the manual.

1. Remove the processor side panel.
2. Remove the chassis cover plate by turning the two captive latches one-quarter turn counterclockwise.
3. Remove the card extractor tool attached to the removed cover plate.

CAUTION

Printed wiring assemblies with red solder masks contain MOS or electrostatic-sensitive devices. Exercise extreme care in handling to avoid damage. Common practices, such as touching a grounded surface before handling, inserting in antistatic or conductive bags for storage or transfer, and repairing only at properly equipped and grounded work stations, must be strictly followed.

4. Remove the printed wiring assemblies one at a time and perform the switch/jumper verification procedure as described in the following paragraphs.
5. Verify that the placement of each printed wiring assembly in the chassis agrees with the assignment for the associated system configuration (refer to section 1 for specific slot assignments).
6. Secure the chassis cover plate and close the side panel.

MEMORY INTERFACE BOARD

The memory interface address board contains printed-circuit-type switches for selection of direct memory access (DMA) priority. Refer to section 3 for the location and normal settings of these switches for a CYBER 18 system.

I/O-TTY CONTROLLER

This board provides an interface between the processor and a comment device (teletypewriter or console display).

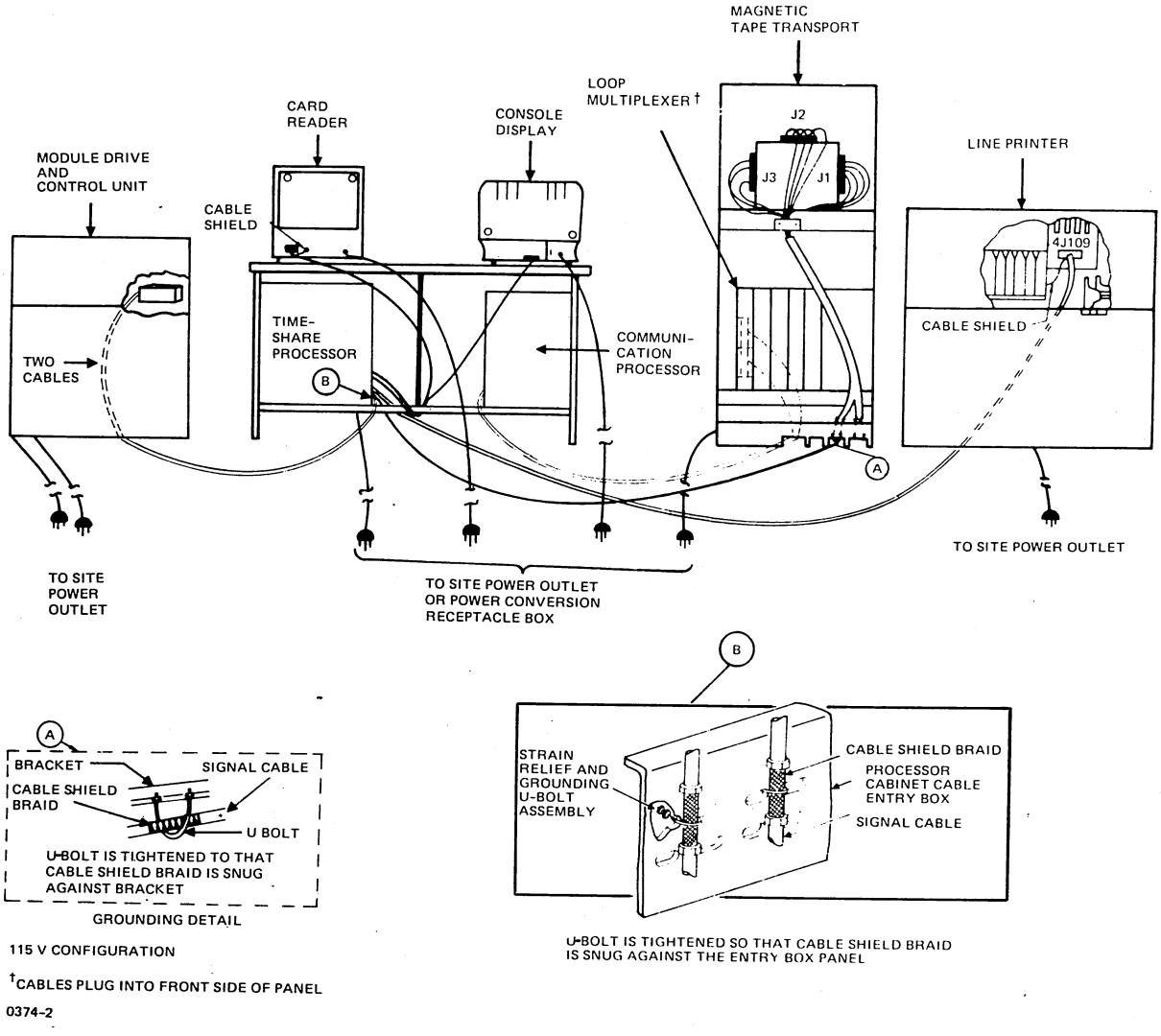

Figure 2-6. Typical CYBER 18 Dual Processor System Cabling Diagram

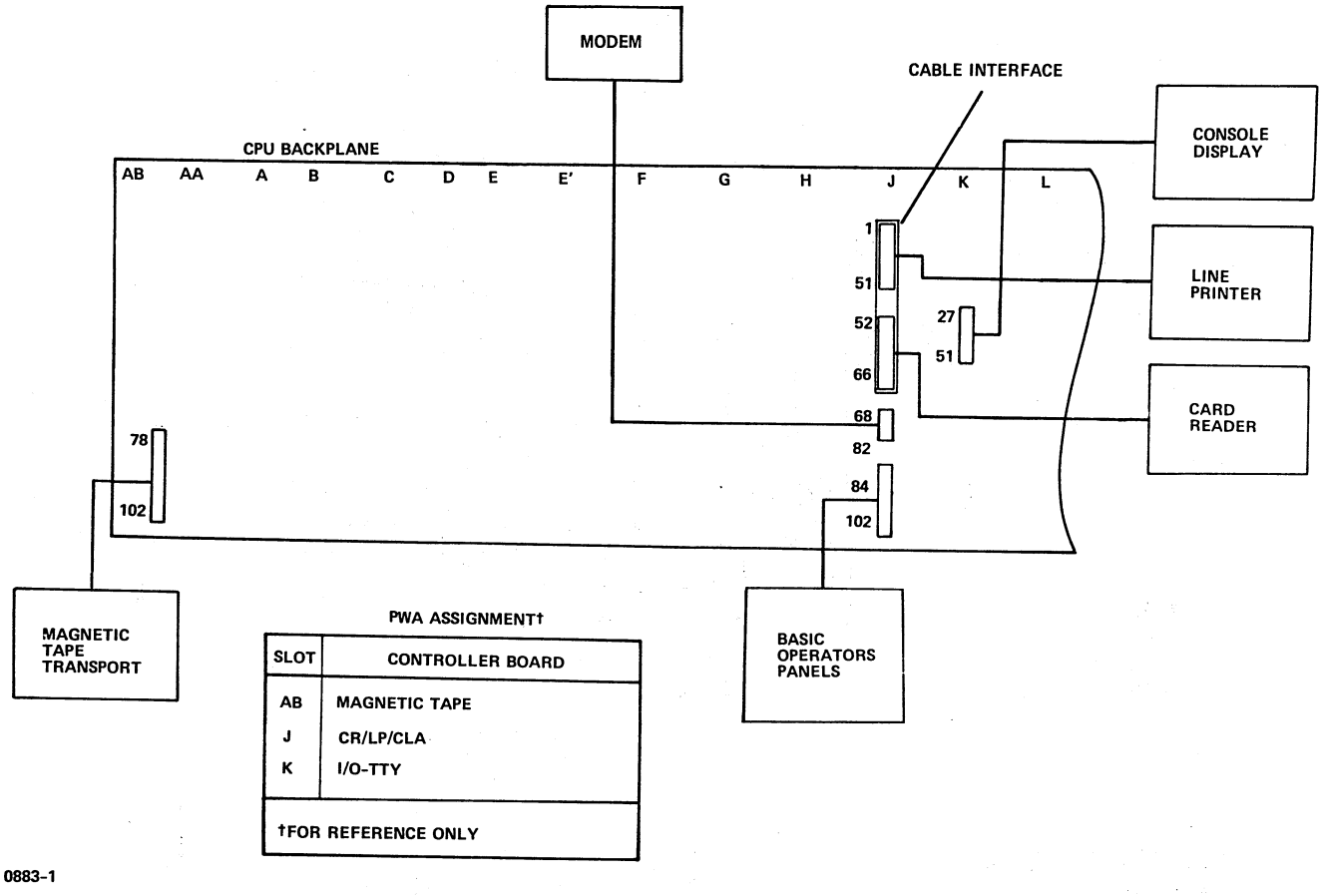

PWA ASSIGNMENT†

SLOT	CONTROLLER BOARD
AB	MAGNETIC TAPE
J	CR/LP/CLA
K	I/O-TTY

†FOR REFERENCE ONLY

Figure 2-7. Typical CYBER 18-5M Backplane Cabling Diagram

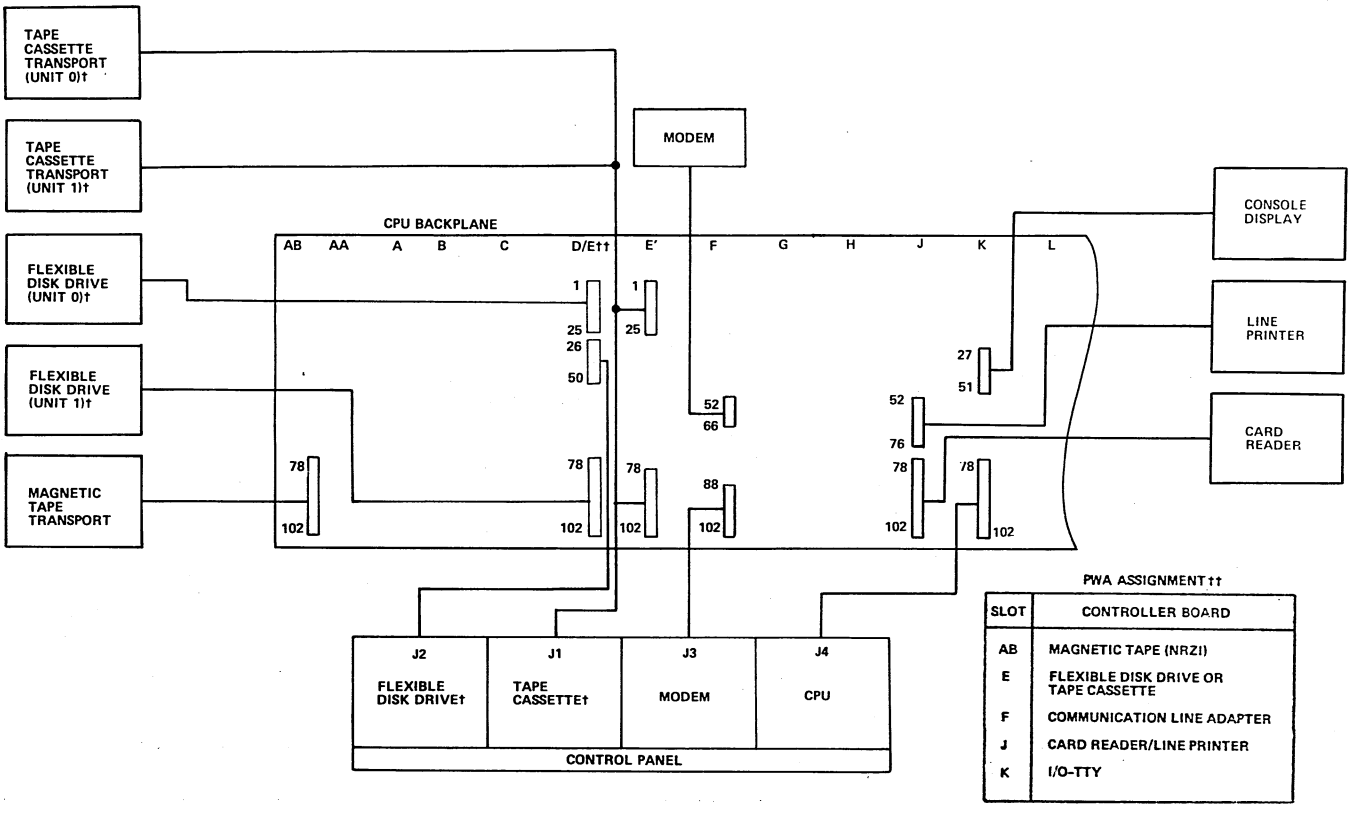

†REFER TO SECTION 1 FOR SLOT ASSIGNMENT WITH FLEXIBLE DISK DRIVE AND TAPE CASSETTES IN THE SAME INSTALLATION.

††FOR REFERENCE ONLY

1224

Figure 2-8. Typical CYBER 18-10M Backplane Cabling Diagram

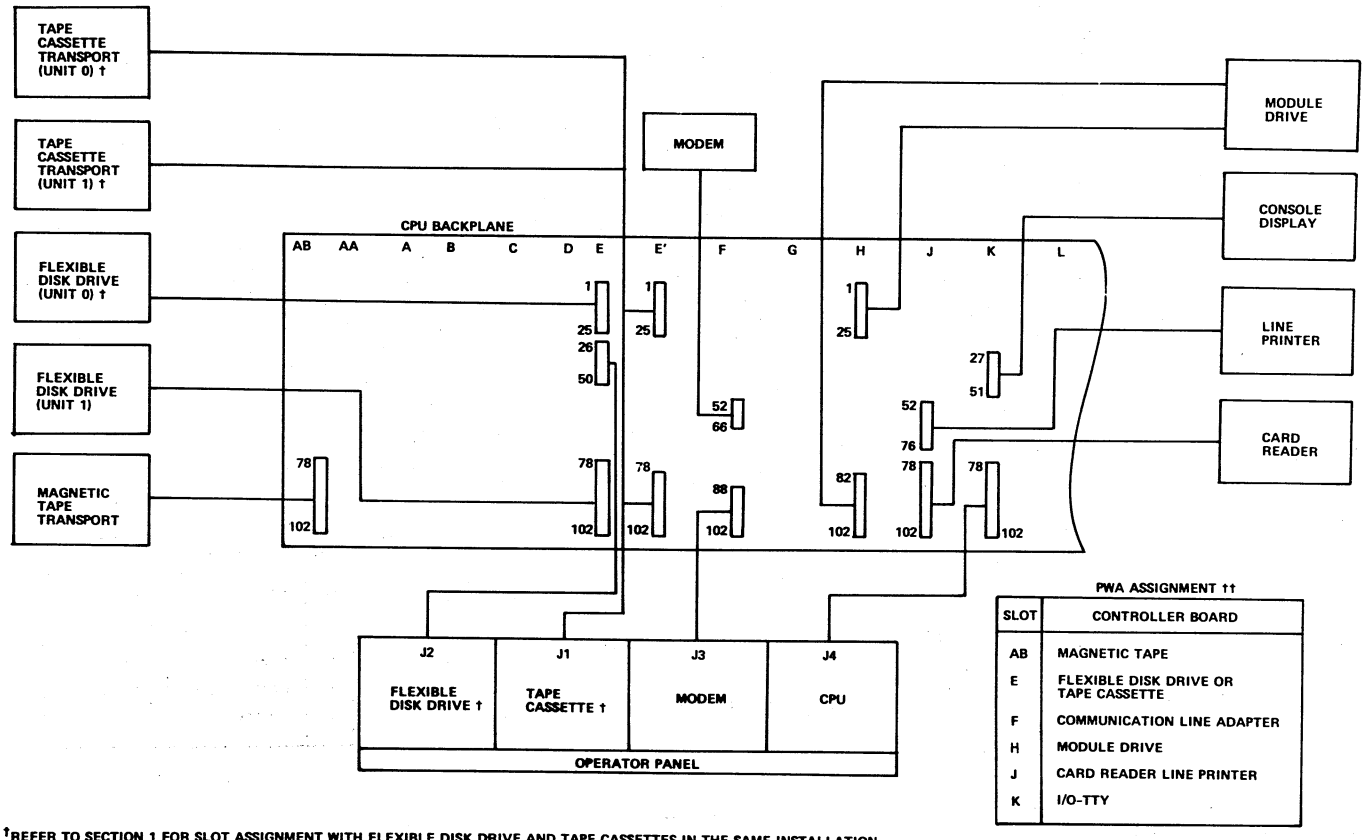

†REFER TO SECTION 1 FOR SLOT ASSIGNMENT WITH FLEXIBLE DISK DRIVE AND TAPE CASSETTES IN THE SAME INSTALLATION.
††FOR REFERENCE ONLY

0224A-1

Figure 2-9. Typical CYBER 18-20 Backplane Cabling Diagram

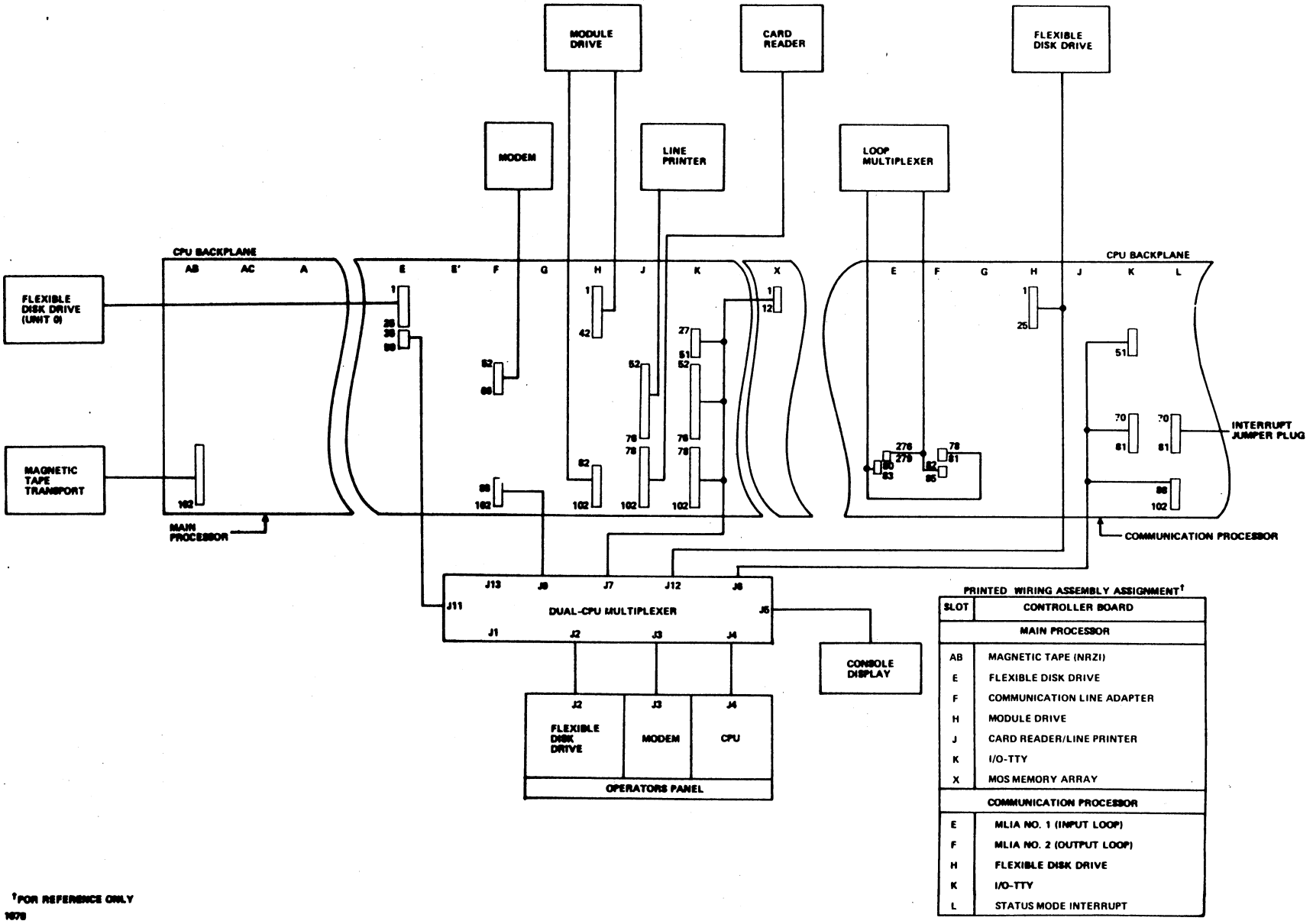

Figure 2-10. Typical CYBER 18-25 Backplane Cabling Diagram

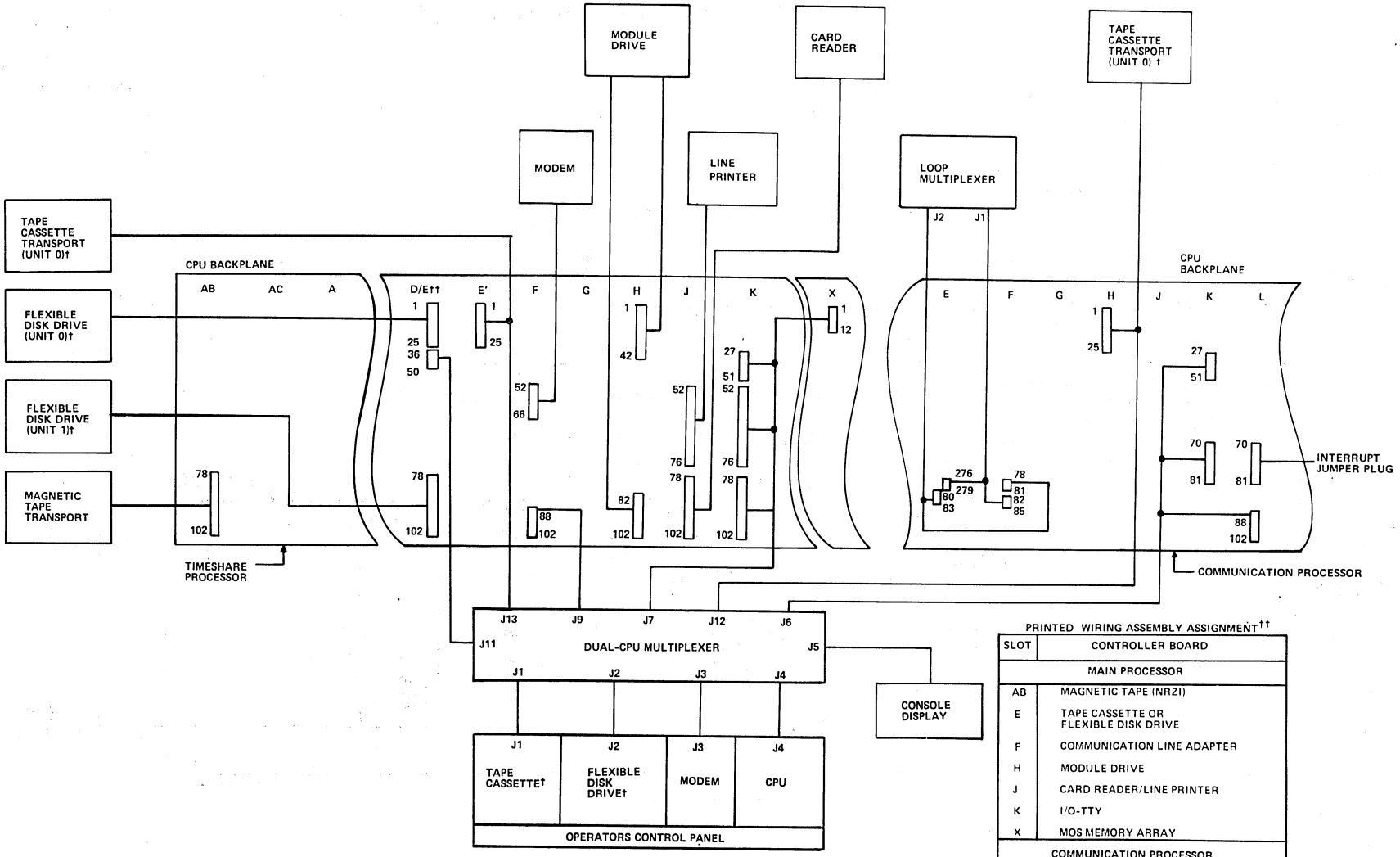

PRINTED WIRING ASSEMBLY ASSIGNMENT††

SLOT	CONTROLLER BOARD
	MAIN PROCESSOR
AB	MAGNETIC TAPE (NRZI)
E	TAPE CASSETTE OR FLEXIBLE DISK DRIVE
F	COMMUNICATION LINE ADAPTER
H	MODULE DRIVE
J	CARD READER/LINE PRINTER
K	I/O-TTY
X	MOS MEMORY ARRAY
	COMMUNICATION PROCESSOR
E	MLIA NO. 1 (INPUT LOOP)
F	MLIA NO. 2 (OUTPUT LOOP)
H	TAPE CASSETTE
K	I/O-TTY
L	STATUS MODE INTERRUPT

†REFER TO SECTION 1 FOR SLOT ASSIGNMENT WITH FLEXIBLE DISK DRIVE AND TAPE CASSETTES IN THE SAME INSTALLATION
††FOR REFERENCE ONLY

1226

Figure 2-11. Typical CYBER 18-30 Backplane Cabling Diagram

Communication rates (speeds) vary with the type of device (baud rate) on the I/O-TTY controller that must be set to a rate compatible with the comment device. In the CYBER 18 configuration, the normally selected rate is 9600 baud. Figure 2-12 shows the location and normal operating position of these switches.

TRANSFORM BOARD

The transform board provides for enable/disable of programmed read-only memory via a jumper located at board position F-13. When this jumper is installed, read-only micro memory on the board is enabled for pages 0 and 1. When the jumper is absent, read/write micro memory on a board located in another position of the processor may be enabled for pages 0 and 1. Figure 2-13 illustrates the location of the micro-memory select jumper for the CYBER 18 processor configuration.

READ/WRITE MICRO-MEMORY INSTALLATION CONFIGURATION

512-instruction micro-memory boards and 2048-instruction micro-memory boards may be installed in CYBER 18-10M, 18-20, 18-25, and 18-30 systems in any combination using processor slots T and S. Refer to section 3 for standard configuration of page select switch settings and processor locations. Note that the lowest page number is always 4 and that slot T is always used for a single board.

PLACEMENT OF PRODUCT AND EQUIPMENT LABELS

Drop-ship or add-on equipment delivered for on-site installation is accompanied by a field print package and various product identification labels. Install the labels in the locations specified in table 2-1.

POWER-ON AND VOLTAGE TESTING PROCEDURES

To apply power to the processor and to verify proper power supply voltage levels, perform the following steps.

I/O-TTY CONTROLLER BOARD (COMPONENT SIDE)

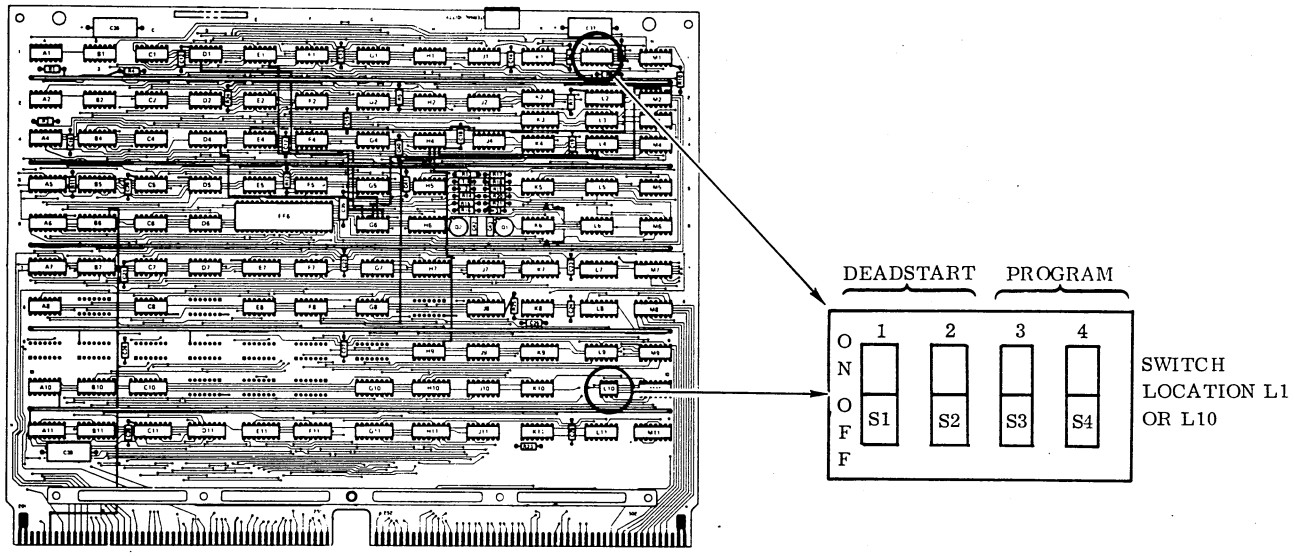

BAUD RATE SELECT (LOCATION L1 OR L10)

RATE	DEADSTART		PROGRAM	
	SWITCH POSITION 1	SWITCH POSITION 2	SWITCH POSITION 3	SWITCH POSITION 4
110	ON	ON	ON	ON
300	ON	OFF	ON	OFF
1200	OFF	ON	OFF	ON
9600†	OFF	OFF	OFF	OFF

†NORMAL OPERATING POSITION

017

Figure 2-12. I/O-TTY Controller Board Switches

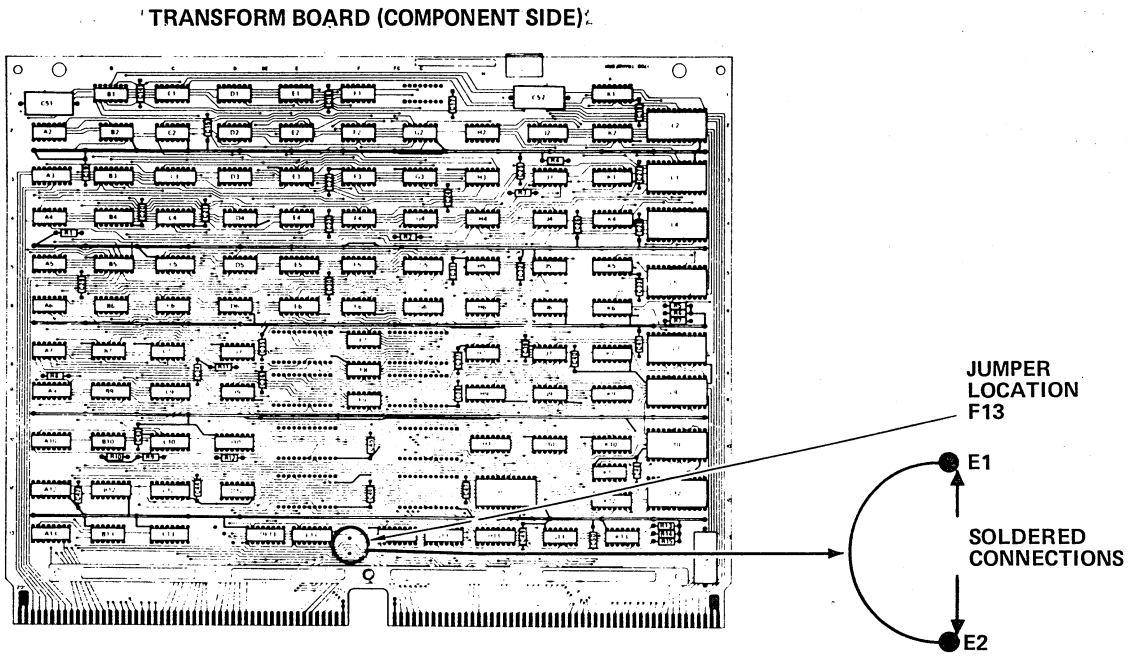

NOTE: JUMPER IS NORMALLY INSTALLED FOR THE CYBER 18-5M 18-20, 18-25, AND 18-30 SYSTEMS.

1879

Figure 2-13. Transform Board Jumper

TABLE 2-1. PRODUCT IDENTIFICATION LABEL PLACEMENT INDEX

Equipment	Description	Equipment Label	Product Label	FCO Log	Field Prints and Documents
AT241	32K MOS memory	A	A	A	C
AT275	16K MOS memory	A	A	A	C
AT314	A/Q Extender	A	A	A	C
AT352	CYBER 18/1500 Series adapter	A	A	A	C
AU115	Dual Mode Access	A	A	A	C
AV102	Side table	E	-	E	C
BA209	512-instruction micro-memory expansion	A	A	A	C
BA210	2K-instruction micro-memory	A	A	A	C
BA212	MOS memory interface	A	A	A	C

NOTES:

A Install label on CPU plenum cover

C Add to system field print package in desired sequence

E Install label behind front panel on CPU power supply mounting bracket

TABLE 2-1. PRODUCT IDENTIFICATION LABEL PLACEMENT INDEX (Contd)

Equipment	Description	Equipment Label	Product Label	FCO Log	Field Prints and Documents
BE602	Tape cassette transport	B	B	B-mounting frame	C
BJ402 BJ701 BZ403	Module drive	D	B	B-logic cover	C
BR704	Cartridge disk drive	D	B	B-logic cover	C
BR803	Flexible disk drive	D	B	B-mounting frame	C
BU272	DMA Extender	A	A	A	C
BW101 BW303 BW305	Magnetic tape transport	D	B	B-logic chassis	C
BW812	Magnetic tape translator board	D	B	B-logic chassis	C
CB104	300 card/min reader	D	B	B-rear	C
CC555	Console display	D	B	B-rear	C
CC614	Console display	D	B	B-rear	C
CC628	Display terminal	D	B	B-rear	C
CF112	Output card punch	D	B	B-rear cover	C
CL408 CL411	300 line/min printer	D	B	B-rear inside	C
CT103	600 line/min printer	D	B	B-rear inside	C
CT104	70 line/min printer	D	B	B-rear	C
CT105	300 line/min printer	D	B	B-rear inside	C
CT106	900 line/min printer	D	B	B-rear inside	C
CW218	I/O Expansion Unit	D	B	B-logic chassis	C
CY117	Line printer cable	E	-	E	C
DK609 DL103	Paper tape relay station	B	B	B	C
DT120	Breakpoint panel	B	B	B-CPU chassis	C
DT223	Error correction code array	A	A	A	C
DT610	Current loop adapter	B	B	B	C
DU137	Asynchronous communication line adapter	D	B	B-logic chassis	C
DY192	Multiplexer loop interface adapter	A	A	A	C
DY198	Communication line expansion	D	B	B-logic chassis	C

NOTES:

A Install label on CPU plenum cover

B Install label on equipment in designated location

C Add to system field print package in desired sequence

D Label already installed on equipment

E Install label behind front panel on CPU power supply mounting bracket

TABLE 2-1. PRODUCT IDENTIFICATION LABEL PLACEMENT INDEX (Contd)

Equipment	Description	Equipment Label	Product Label	FCO Log	Field Prints and Documents
DY221	Current loop adapter/power supply	B	B	B	C
DZ101	Magnetic tape formatter	D	B	B-logic chassis	C
FA104	Tape cassette controller	A	A	A	C
FA107	Magnetic tape transport controller	A	A	A	C
FA111	Cartridge disk drive controller	A	A	A	C
FA464 FA465	Magnetic tape transport controller	A	A	A	C
FA727	Module drive control unit	D	B	B-logic cover	C
FA730	Flexible disk drive controller	A	A	A	C
FA750	Cartridge disk drive controller	A	A	A	C
FC109	Card reader/line printer/ communication line adapter controller	A	A	A	C
FC402	Breakpoint controller	A	A	A	C
FC539	Card reader/line printer/ communication line adapter controller	A	A	A	C
FE308 FE516	Paper tape/card punch controller	A	A	A	C
FH301	Card reader/line printer controller	A	A	A	C
FJ127	Primary buffered communication line adapter	A	A	A	C
FJ128	Expansion buffered communication line adapter	A	A	A	C
FJ448	Synchronous data link control communication line adapter	A	A	A	C
FJ441	Dual-channel communication line adapter	A	A	A	C
FJ442	Eight-channel communication line adapter	A	A	A	C
FV678	Local link coupler	B	B	B	C
FV679	Auto restart loader	A	A	A	C
FV701	Stall alarm panel	A	A	A	C

NOTES:

A Install label on CPU plenum cover

B Install label on equipment in designated location

C Add to system field print package in desired sequence

D Label already installed on equipment

E Install label behind front panel on CPU power supply mounting bracket

TABLE 2-1. PRODUCT IDENTIFICATION LABEL PLACEMENT INDEX (Contd)

Equipment	Description	Equipment Label	Product Label	FCO Log	Field Prints and Documents
GB138	Module drive interface	A	A	A	C
GB145	Module drive adapter	A	A	A	C
GH447	Vertical equipment cabinet	D	B	B-back door	C
GH461	Loop multiplexer cabinet	D	B	B-back door	C
GK203	Power conversion transformer (processor)	D	D	B-cover	C
GK205	Power conversion transformer	D	B	B-back cover	C
MD420	Card reader off-line test deck	E	-	E	-
MD426	200 UT emulation controlware deck	E	E	E	-
MD427	2780 emulation controlware deck	E	E	E	-
MD428	3780 emululation controlware deck	E	E	E	-
XA118	Power conversion transformer (system)	D	B	B-cover	C
YA119	Card reader cable	E	-	-	C
YA120	Card reader cable	E	-	-	C

NOTES:

A Install label on CPU plenum cover

B Install label on equipment in designated location

C Add to system field print package in desired sequence

D Label already installed on equipment

E Install label behind front panel on CPU power supply mounting bracket

NOTE

The processor may use either of two power supply configurations. Refer to figures 2-3 and 2-4 to determine the power supply configuration of the processor being installed before proceeding with the power-on and voltage testing.

1. Remove the rear access panel from the single processor cabinet. Remove the left and right rear access panels from the dual processor cabinet.
2. Verify that the main power ciruit breaker (CB01) is properly set to on (figure 2-3 or 2-4).
3. Verify that the power supply circuit breaker is in the ON position (figure 2-3). (This circuit breaker is only installed on processors using the Scott power supply. It is not installed on processors using the LH power supply.)
4. Press the ac POWER switch on the control panel to ON.
5. Verify that the ac POWER ON indicator is lighted and the processor cooling fans are rotating.
6. Using a volt-ohmmeter, measure the voltages between the ground terminal lug and each voltage terminal lug on the processor backplane. If the indicated voltages are not within 1 percent of the terminal lug labeled value, adjust the associated power supply voltage adjustment potentiometer accordingly. Clockwise

rotation increases the output voltage. The adjustment potentiometers are located on the front of the associated power supply.

7. After verification, remove power by setting the ac POWER switch to OFF.

CAUTION

Do not remove or install MOS memory array printed wiring assemblies in the processor with power applied to the processor logic cage. With the exception of the MOS memory array PWA's, the remaining processor and I/O controller PWA's may be removed or installed in the processor cage with power applied.

8. Proceed with installation of the peripheral equipments.

9. After the peripheral equipments have been installed, apply power and proceed with diagnostic testing.

Application of power and verification of processor voltages for CYBER 18-25 and 18-30 systems are accomplished in the same manner as outlined for CYBER 18-5M, 18-10M, and 18-20 systems above, except that in these systems, voltage verification of two processors is required.

DIAGNOSTIC TESTING

NOTE

The diagnostic tests and routines described in the system hardware maintenance manual can only be performed after the console display, processor, and flexible disk drive or tape cassette or card reader (diagnostic load device) installations are complete.

Perform the diagnostic test as directed by the diagnostic decision logic tables in the respective subsystem hardware maintenance manual or field repair guide.

This section describes the installation procedure for the MOS memory modules and micro-memory boards (figure 3-1).

CAUTION

Printed wiring assemblies with red solder masks contain MOS or electrostatic-sensitive devices. Exercise extreme care in handling to avoid damage. Common practices, such as touching a grounded surface before handling, inserting in antistatic or conductive bags for storage transfer, and repairing only at properly equipped and grounded work stations, must be strictly followed.

Do not remove or install MOS memory array printed wiring assemblies in the processor with power applied to the processor logic cage as damage to the PWA may result.

PARTS AND EQUIPMENT

Parts and Equipment	Equipment Number	Part Number
MOS memory array, 16K	AT275-B	96745800
MOS memory array, 32K	AT241-B	96745700
512-instruction micro memory	BA209-A	88905100
2948-instruction micro memory	BA210-B	96755900
MOS memory address connector	--	96762000

UNCRATING

Each memory module or micro memory board is shipped in a heavy-duty cardboard carton and is buffered from shock and impact damage by an industrial filler. No special instructions are required to remove the memory module from its shipping carton.

CRATING

See the uncrating instructions above.

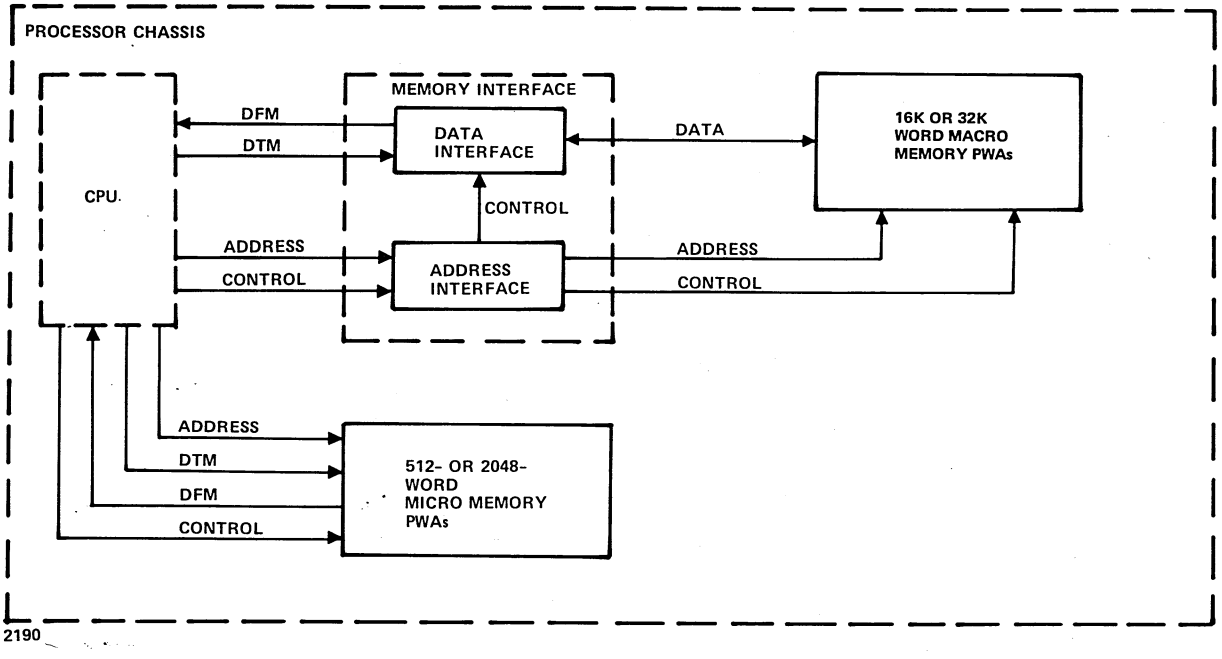

Figure 3-1. MOS Memory and Micro-Memory Block Diagram

MOS MEMORY

INSTALLATION OR REPLACEMENT

When installing or replacing a MOS memory module, perform the following:

NOTE

The extractor tool attached to the chassis cover plate is used to remove the memory module. The module is extracted by inserting the tine of the extractor tool into either the upper or lower front assembly hole of the module and moving the tool forward against the chassis.

CAUTION

Do not remove or install a MOS memory array printed wiring assembly in the processor with power applied to the processor logic cage as damage to the PWA may result.

1. Ensure that the power to the processor is OFF.
2. Remove the MOS memory module.
   a. Refer to the switch/jumper verification procedure in section 2.
   b. During processor installation remove the memory interface address PWA (slot W) and set the priority switches to the customer's requirement (figure 3-2). Also check that all memory interface and memory PWAs are in the correct slots. Refer to section 1.
   c. During replacement remove the defective PWA and insert the replacement PWA. If the defective PWA is the address interface, ensure that the priority switches (figure 3-2) of the replacement PWA agree with the switch of the defective PWA. Insert the replacement PWA.
3. Restore power to the processor.
4. Perform the diagnostic tests as described in the diagnostic decision logic tables in the processor hardware maintenance manual.

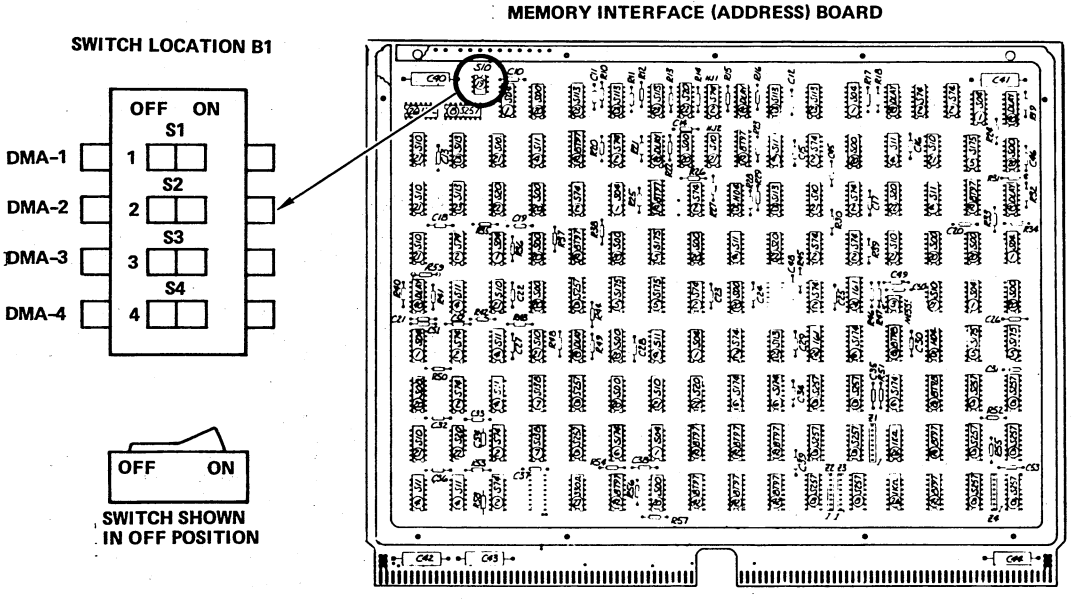

PRIORITY CHANNEL ENABLE (LOCATION B1)

FUNCTION	LOCATION	NORMAL POSITION†
DMA-1	S1	OFF
DMA-2	S2	OFF
DMA-3	S3	OFF
DMA-4	S4	OFF

†NO PRIORITY SELECTED

Figure 3-2. Memory Interface Address Board Switches

NOTE

The diagnostic tests and routines described in the system hardware maintenance manual can only be performed after the console display, processor, and flexible disk drive or tape cassette or card reader (diagnostic load device) installations are completed.

EXPANSION

If the purpose of installation is to expand the existing MOS memory capability of the processor, the following steps must be performed:

CAUTION

Do not remove or install the MOS memory array printed wiring assembly in the processor with power applied to the processor logic cage as damage to the PWA may result.

1. Turn off the power to the processor.
2. Install the memory module (in slot X, Y, Z, or AC) and address connector. Observe the following configuration rules:
   a. MOS memory module slots (X, Y, Z, and AC) must be filled sequentially starting with slot X (as viewed from the front of processor). 32K MOS memory modules must occupy slots to the right of 16K MOS memory modules. Example:

	AC†	Z†	Y	X
No. 1	16	16	16	32
No. 2	16	16	32	32
No. 3	16	32	32	32

   b. When MOS memory modules occupy more than one slot position, a MOS memory address connector must be connected to the backplane pins of each occupied slot excluding slot X. Attachment of connectors is determined by the memory array inserted in each slot. Pin 1 of each connector used must coincide with the same backplane pin of each occupied slot (table 3-1). When all connectors are attached, they are horizontally aligned for the configuration used.
3. Remove the MOS memory interface address PWA and verify that priority switches (figure 3-2) are set for system application.
4. Replace the MOS memory interface address board and restore power to the processor.
5. Perform the diagnostic tests as described in the diagnostic decision logic tables in the subsystem hardware maintenance manual.

NOTE

The diagnostic tests and routines described in the subsystem hardware maintenance manual can only be performed after the console display, processor, and flexible disk drive or tape cassette or card reader (diagnostic load device) installations are complete.

MICRO-MEMORY BOARD INSTALLATION

512-instruction micro-memory boards and 2048-instruction micro-memory boards may be installed in CYBER 18-10M, 18-20, 18-25, and 18-30 systems in any combination using processor slots T and S. The standard configuration of page select switch settings and processor locations is shown in table 3-2. Note that the lowest page number is always 4 and that slot T is always used for a single board.

† These configurations are not available on the CYBER 18-10M.

TABLE 3-1. ADDRESS CONNECTOR ATTACHMENT

Backplane Pin That Coincides With Pin No. 1 of Address Connector	Memory Array Configuration			
	Slot AC†	Slot Z†	Slot Y	Slot X
7	32/16K	32K	32K	32K
8	16K	16K	32K	32K
9	16K	16K	16K	32K
10	16K	16K	16K	16K
10	None	None	16K	16K
No connector required	None	None	None	16K

†These configurations are not available on the CYBER 18-10M.

TABLE 3-2. STANDARD CONFIGURATIONS OF OPTIONAL READ/WRITE MICRO MEMORY

Number of Pages	Printed Wiring Assemblies Installed	Processor Slot
1	512 board	T
2†	512 board 512 board	T S
4	2048 board	T
5†	2048 board 512 board	T S
8†	2048 board 2048 board	T S

†For dual-board installation, slot T should contain the standard page(s) and slot S the next consecutively higher numbered page(s). See figures 3-3 and 3-4.

512-INSTRUCTION MICRO-MEMORY BOARD (ONE PAGE)

The switches shown in figure 3-3 provide for micro-memory page selection. Pages 0 and 1 of micro memory are reserved for optional read-only memory installed on the transform board. Pages 2 and 3 are not used. The lowest page number that can be used for read/write micro memory is page 4. Table 3-3 lists the standard configurations of read/write micro memory and the required processor slots for board installation.

2048-INSTRUCTION MICRO-MEMORY BOARD (FOUR PAGE)

The switches shown in figure 3-4 provide for micro-memory page selection. Pages 0 and 1 of micro memory are reserved for optional read-only memory installed on the transform board. Pages 2 and 3 are not used. The lowest page number that can be used for read/write micro-memory is page 4. Table 3-2 lists the standard configurations of read/write micro memory and the required processor slots for board installation.

To replace or install the 512- or 2048-instruction micro-memory board, perform the following steps:

1. With the power off, remove the right side panel from the processor cabinet to gain access to the basic processor CPU or remove the left side panel from the CYBER 18-25/18-30 processor cabinet to gain access to the communications processor CPU.
2. Remove the chassis cover plate by turning the two captive fasteners one-quarter turn counterclockwise.
3. Remove the card extractor tool attached to the removed cover plate.

CAUTION

Printed wiring assemblies with red solder masks contain MOS or electrostatic-sensitive devices. Exercise extreme care in handling to avoid damage. Common practices, such as touching a grounded surface before handling, inserting in antistatic or conductive bags for storage or transfer, and repairing only at properly equipped and grounded work stations, must be strictly followed.

4. Before installing new boards, the page select switch configuration must be determined. Set the page select switches to the positions required for the micro-memory configuration (figure 3-3 or 3-4).
5. Position the new board or boards with new switch settings in the designated positions with the component side facing left.
6. Apply firm pressure at the upper and lower corners of the boards and seat them into their respective backplane connectors.
7. Replace the processor cover plate and side panels. Restore power to the processor.
8. Perform the diagnostic tests as described in the diagnostic decision logic tables in the subsystem hardware maintenance manual.

NOTE

The diagnostic tests and routines described in the subsystem hardware maintenance manual can only be performed after the console display, processor, and flexible disk drive or tape cassette (diagnostic load device) installations are complete.

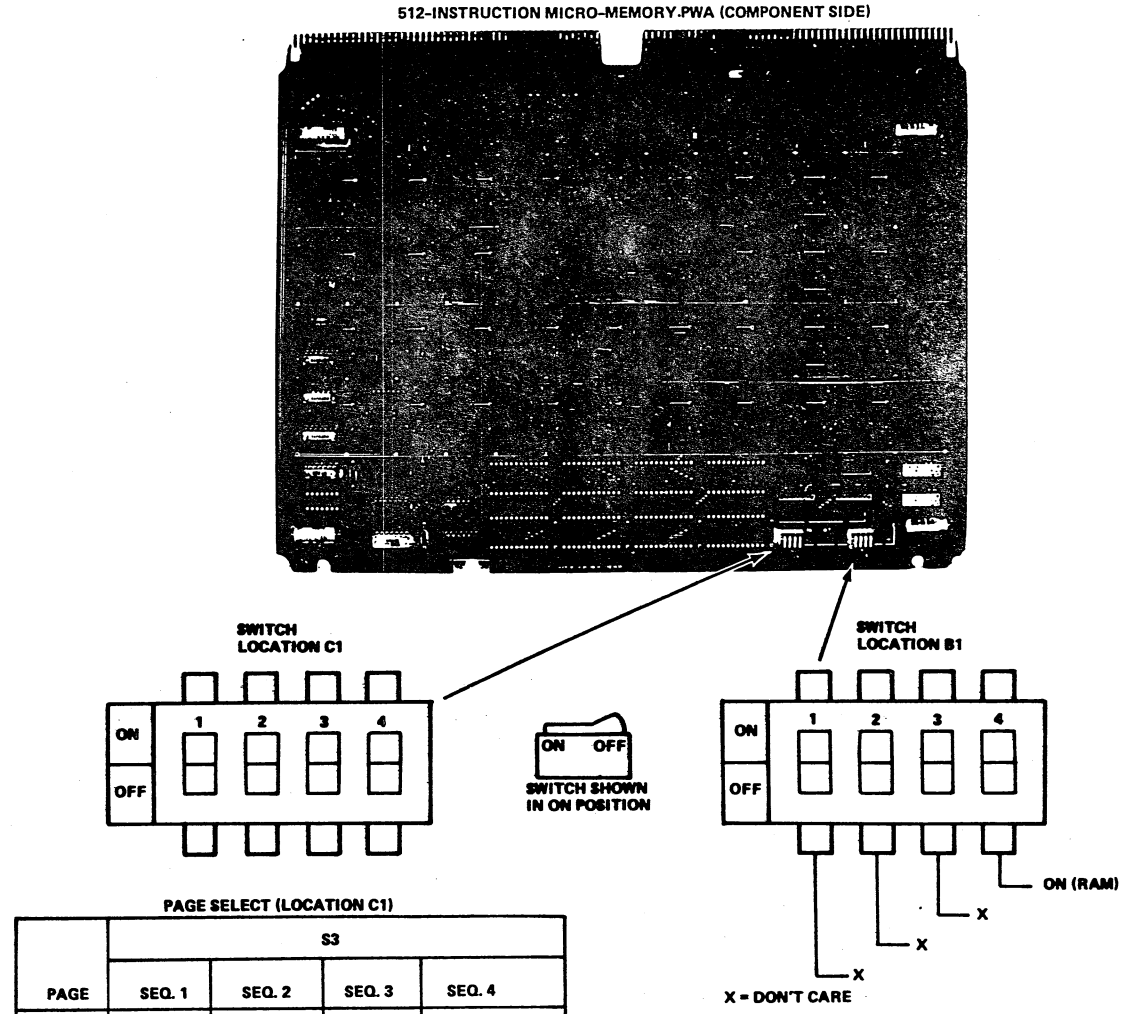

PAGE SELECT (LOCATION C1)

PAGE	S3 SEQ. 1	S3 SEQ. 2	S3 SEQ. 3	S3 SEQ. 4
0†	OFF	OFF	OFF	OFF
1†	OFF	OFF	OFF	ON
2†	OFF	OFF	ON	OFF
3†	OFF	OFF	ON	ON
4††	OFF	ON	OFF	OFF
5	OFF	ON	OFF	ON
6	OFF	ON	ON	OFF
7	OFF	ON	ON	ON
8†††	ON	OFF	OFF	OFF
9	ON	OFF	OFF	ON
10	ON	OFF	ON	OFF
11	ON	OFF	ON	ON
12	ON	ON	OFF	OFF
13	ON	ON	OFF	ON
14	ON	ON	ON	OFF
15	ON	ON	ON	ON

†PAGE SELECT SWITCHES SHOULD NOT BE SET TO PAGES 0 THROUGH 3.
††STANDARD SETTING FOR CYBER 18-25 OR 18-30 CPU II (COMMUNICATION PROCESSOR)
†††STANDARD SETTING FOR ALL CPUs EXCEPT CYBER 18-25 OR 18-30 CPU II

1637-1

Figure 3-3. 512-Instruction Micro Memory Page Select Switches

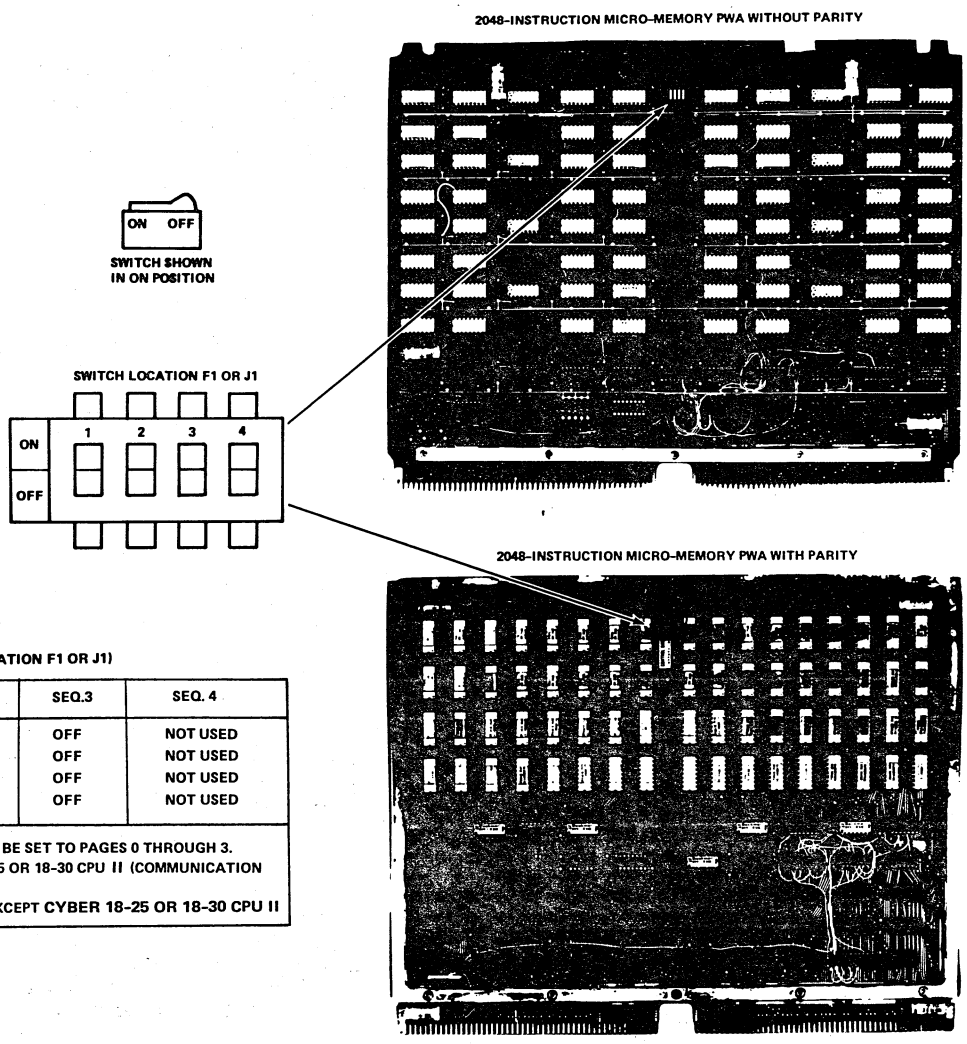

PAGE SELECT (LOCATION F1 OR J1)

PAGE	SEQ. 1	SEQ. 2	SEQ.3	SEQ. 4
0 - 3†	OFF	OFF	OFF	NOT USED
4 -7††	OFF	ON	OFF	NOT USED
8 - 11†††	ON	OFF	OFF	NOT USED
12 - 15	ON	ON	OFF	NOT USED

†PAGE SELECT SWITCHES SHOULD NOT BE SET TO PAGES 0 THROUGH 3.
††STANDARD SETTING FOR CYBER 18-25 OR 18-30 CPU II (COMMUNICATION PROCESSOR)
†††STANDARD SETTING FOR ALL CPUs EXCEPT CYBER 18-25 OR 18-30 CPU II

1638-1

Figure 3-4. 2048-Instruction Micro-Memory Page Select Switches

This section describes the steps necessary to install the power conversion transformer unit. This installation is required where site power for the CYBER 18 system is less than 103 V ac or greater than 132 V ac with a frequency of 48 to 63 Hz. Table 4-1 lists the input voltage levels that can be accommodated by the power conversion transformer unit.

PARTS AND EQUIPMENT

The following parts are to be obtained at the site location in compliance with the local electrical code.

Item	Parts	Quantity
1	Single-phase power plug compatible with site 20 ampere power source receptacle	1
2	Power cable, three-wire AWG-8, long enough to connect power conversion transformer to source receptacle	1
3	Power cable, three-wire AWG-8, long enough to connect power conversion transformer output to duplex receptacles	2 (3†)
4	Double duplex receptacle box and cover	1
5	Triple duplex receptacle box and cover	1
6	Duplex receptacles (20 amperes) that mate with plugs provided on equipment supplied	2 (3†)
7	Crimp-on eyelet lugs (for connecting power cords to power conversion transformer and duplex receptacles)	12 (15†)
8	No. 8-32 x 1/2-inch machine screw, cadmium plated steel	5
9	No. 8-32 hex machine nut, cadmium plated washer	5
10	No. 8 external tooth, cadmium plated washer	5
11	No. 8 flat, cadmium plated steel washer	5

TABLE 4-1. POWER CONVERSION TRANSFORMER VOLTAGE TAPS

Input Voltage (ac)	Frequency ±3 Hz	Transformer Terminals†	Output Voltage (ac)	Transformer Terminals†
85 V to 105 V (95 V typical)	47 Hz to 63 Hz	1 and 2	103 to 132 (40 amperes maximum)	9 and 10
95 V to 117 V (105 V typical)	47 Hz to 63 Hz	1 and 3	103 to 132 (40 amperes maximum)	9 and 10
103 V to 127 V (115 V typical)	47 Hz to 63 Hz	1 and 4	103 to 132 (40 amperes maximum)	9 and 10
198 V to 235 V (220 V typical)	47 Hz to 53 Hz	1 and 5	103 to 132 (40 amperes maximum)	9 and 10
207 V to 246 V (230 V typical)	47 Hz to 53 Hz	1 and 6	103 to 132 (40 amperes maximum)	9 and 10
216 V to 257 V (240 V typical)	47 Hz to 53 Hz	1 and 7	103 to 132 (40 amperes maximum)	9 and 10
225 V to 268 V (250 V typical)	47 Hz to 53 Hz	1 and 8	103 to 132 (40 amperes maximum)	9 and 10

†See figure 4-3 for power conversion transformer terminal location.

†Required for systems that include 120 V line printer and magnetic tape transport

TOOLS REQUIRED

The following tools are required to uncrate and install the power conversion transformer unit:

Sharp knife (for cutting corrugated carton)

Two 3/8-inch box wrenches

Crimping tool, eyelet lugs (size as required to crimp item 7 of parts list)

UNCRATING

Uncrate the power conversion transformer unit as follows:

CAUTION

The power conversion transformer unit is extremely heavy; handle with care. Two persons are required to lift the unit.

1. Turn the carton upside down and cut the fiber strapping.
2. At approximately the center of the carton, cut horizontally all around the carton and remove the loose half.
3. Using 3/8-inch box wrenches, remove the pallet from the power conversion transformer.
4. Lift the power conversion transformer onto a dolly and transport it to the installation location.

CRATING

Refer to figure 4-1 for crating the power conversion transformer unit.

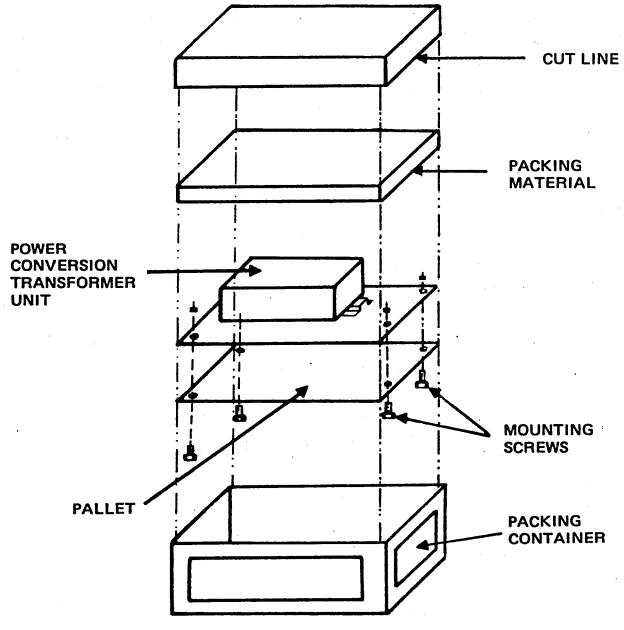

Figure 4-1. Power Conversion Transformer Crating Diagram

MECHANICAL INSTALLATION

Figure 4-2 illustrates the physical characteristics of the power conversion transformer unit. The unit may be positioned in any convenient location.

POWER INSTALLATION

TRANSFORMER

The power conversion transformer is received without installation power cables. See Parts and Equipment above for complete information on these parts.

After testing site power to determine the voltage value, connect the power cable to the associated transformer taps as follows:

1. Remove the cover plate from the power conversion transformer unit.
2. Remove the knockout slugs from the power conversion transformer housing as required for cable connections.
3. Strip the ends of the cables to the required length for connecting to the applicable transformer terminals and duplex receptacles. Crimp the eyelet lugs to the stripped cable ends.
4. Connect the input power cord to the power conversion transformer terminals and frame as follows (figure 4-3):

   Green wire to the frame

   White wire to terminal 1

   Black wire to the terminal compatible with the site power source

5. Connect the output power cords to the power conversion transformer terminals and frame as follows (figure 4-3):

   Green wire to the frame

   White wire to terminal 10

   Black wire to terminal 9

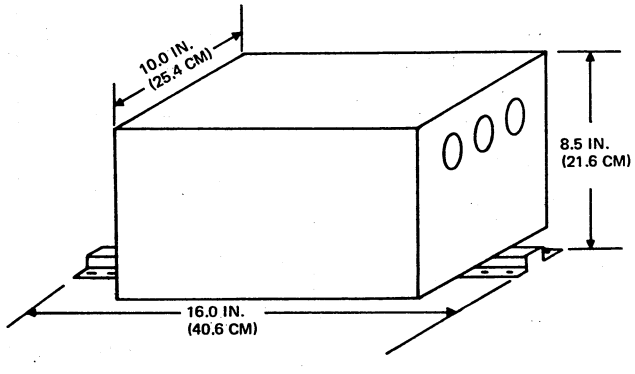

Figure 4-2. Power Conversion Transformer Physical Characteristics

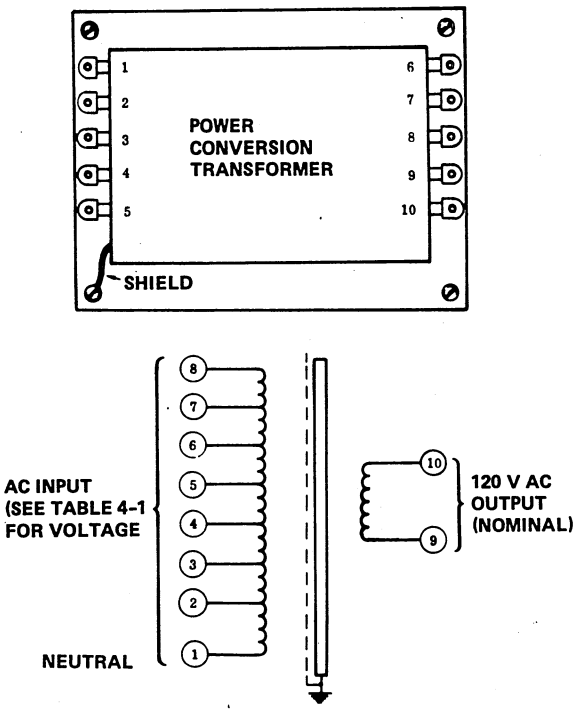

Figure 4-3. Power Conversion Transformer Terminal Identification

6. Assemble the duplex receptacles to the outlet box cover.

7. Feed the output power cables through the outlet box holes and attach them to the duplex receptacles as follows (figure 4-4):

   Green wire to green (GND) terminals screws

   White wire to chrome-plated terminals screws

   Black wire to brass terminals screws

8. Assemble the receptacle box and replace the power conversion transformer cover.

9. Attach the power plug to the input power cable.

10. Connect the input power plug to the site power outlet.

11. Using a volt-ohmmeter, measure the voltage at the duplex outlets. The voltage value indicated should be between 103 and 132 V ac. If this voltage is not indicated, recheck the site power. If the value is the same as the original reading, disconnect the input power connection and recheck the hookup to the power conversion transformer input terminals. If the hookup and site power indication are correct, the power conversion transformer must be defective and a replacement is required.

12. If the indicated voltage is correct, proceed with system installation.

SYSTEM

Connect the processor and peripheral equipment power cables to the duplex receptacles or site power as applicable. Refer to figure 4-4.

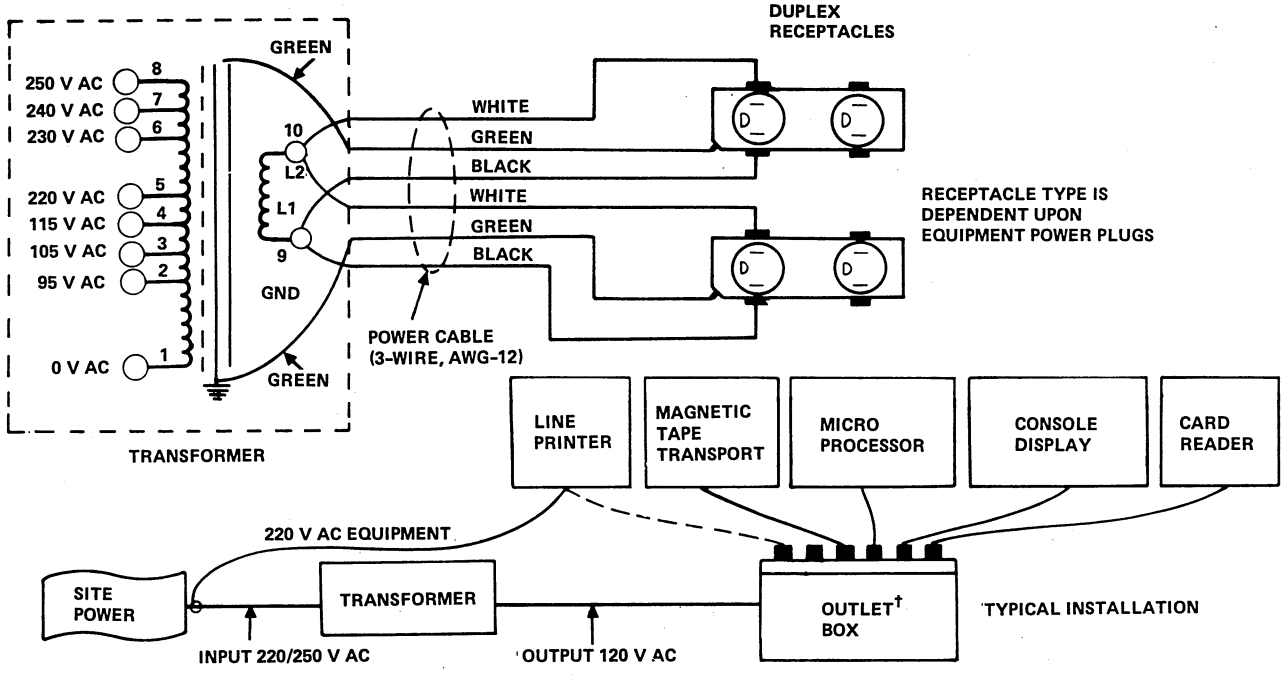

Figure 4-4. Typical 220 V, 50 Hz Power Hookup

The dual-channel communication line adapter is a one-board device that is inserted into a specific board slot in the processor. Refer to section 1 for specific locations.

PARTS AND EQUIPMENT

Parts and Equipment	Equipment No.	Part No.
Communication line adapter (dual-channel)	FJ441-A or FJ441-B	90418703
Cable assembly to modem, 20 feet (6.1 meters)	-	96756734 or 88951565 or 88952436†
Cable assembly to control panel or dual-CPU multiplexer	-	96744895

TEST EQUIPMENT

No special equipment is required to install the communication line adapter or its associated equipment.

UNCRATING

The communication line adapter printed wiring assembly is shipped installed in the processor or packed into a heavy-duty cardboard carton. It is buffered from shock and impact damage by an industrial filler. No special instructions are required to remove the communication line adapter unit.

CRATING

Refer to the uncrating instructions above for crating the unit.

INSPECTION

Inspect the communication line adapter as follows:

1. Remove the communication line adapter printed wiring assembly from the shipping container.
2. Inspect for physical damage to the printed wiring assembly and components.

POWER REQUIREMENTS

The communication line adapter receives +5 Vdc and ±12 Vdc from the power source of the processor by connection to an assigned backplane slot position. The slot position assigned to the communication line adapter is a function of the system application. Refer to section 1 for the specific location.

SIGNAL CABLING

The communication line adapter is supplied with a single 20-foot (6.1-meter) modem cable. To control two channels, an additional cable assembly must be installed. The processor also includes a signal cable that connects the communication line adapter to the control panel or dual-CPU multiplexer. To install the cables, perform the following steps:

1. Attach the modem cables to the backplane as shown in figure 5-1. Verify as labeled on the cable connectors the starting and ending backplane pin numbers to which the cable connectors should be securely mated. Verify that the connectors are mounted over the pins of the backplane. See section 1 for the assigned slot location.
2. Attach the modem cable shield to the cabinet as illustrated in figure 5-1. More than one signal cable can be grounded by a single U-bolt.
3. Attach the communication line adapter control panel cable between backplane pins 84 through 102 and J3 of the CYBER 18-10M and 18-20 control panel or J9 of the CYBER 18-25 and 18-30 dual-CPU multiplexer. Refer to section 2 for specific pin assignments.

SWITCH/JUMPER VERIFICATION

EQUIPMENT/STATION/PROTECT SELECT

Refer to figure 5-2 for setting the equipment and station select switches on the communication line adapter board. Set the protet switch to ON for program protect operation and to OFF for unprotected program operation.

BAUD RATE/DTR/RTS SELECT

Before checking the baud rate switches, ask the customer what type of modem (phone line unit) is or will be installed in the system (see the reference communication handbook). Then perform the following steps:

† FCC EMI qualified part. Use of non-qualified parts on FCC EMI verified systems will void the system verification. Refer to section 1, FCC EMI Verification, for details concerning identification and continuation of this verification.

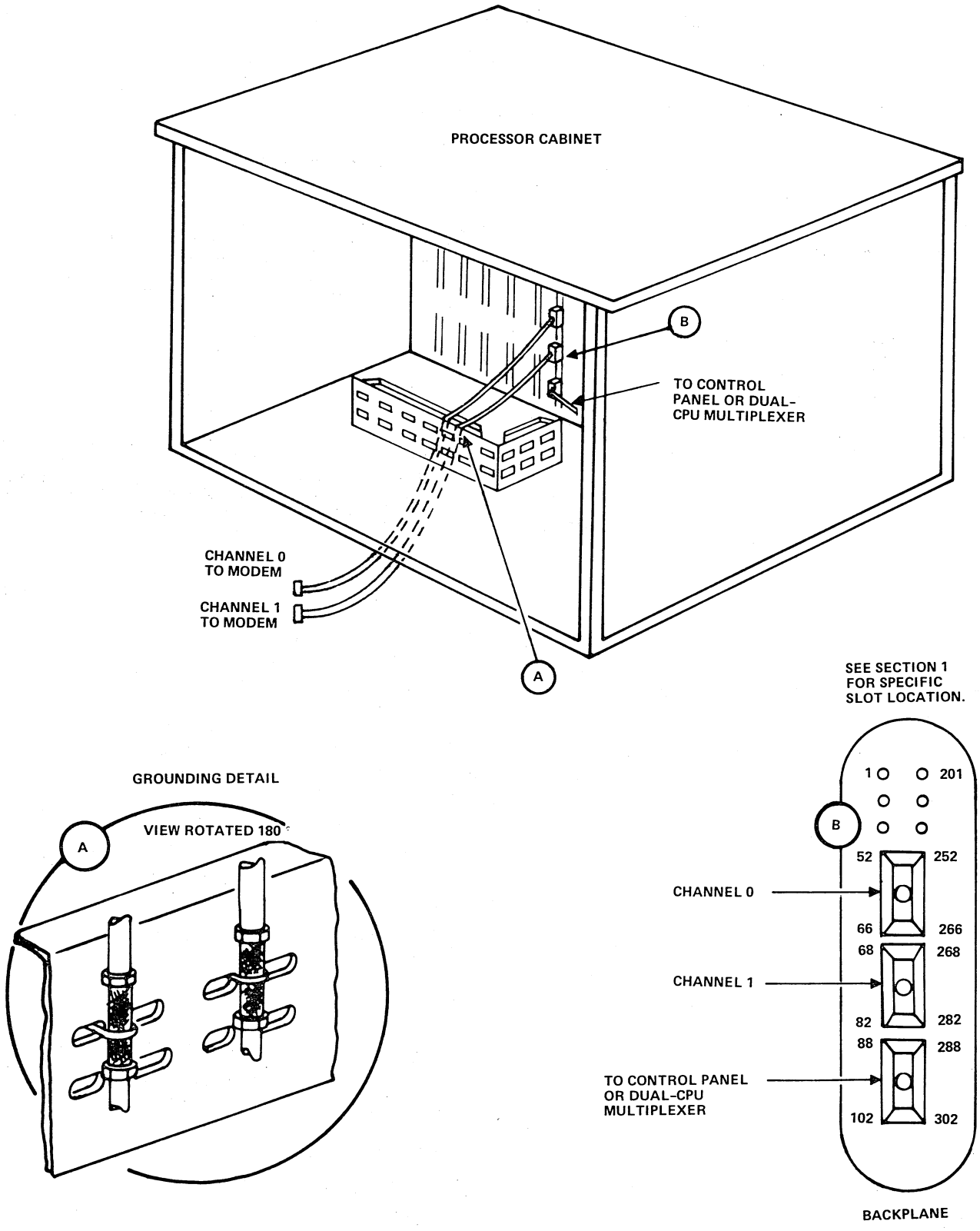

Figure 5-1. CYBER 18 Dual-Channel Communication Line Adapter Modem Cable Installation

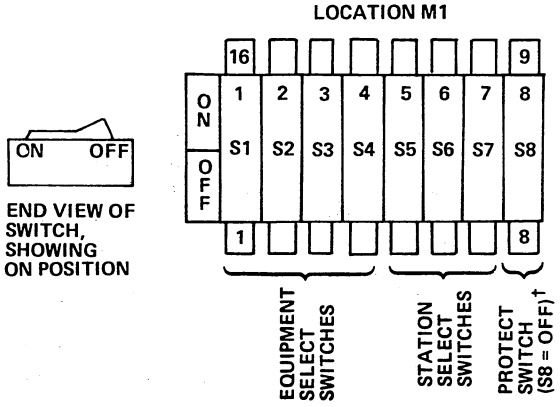

SWITCH POSITIONS (LOCATION M1)

EQUIPMENT CODE				EQUIPMENT SELECT SWITCH			
Q10	Q9	Q8	Q7	S1	S2	S3	S4
0	0	0	0	ON	ON	ON	ON
0	0	0	1	ON	ON	ON	OFF
0	0	1	0	ON	ON	OFF	ON
0	0	1	1	ON	ON	OFF	OFF
0	1	0	0	ON	OFF	ON	ON
0	1	0	1	ON	OFF	ON	OFF
0	1	1	0	ON	OFF	OFF	ON
0	1	1	1	ON	OFF	OFF	OFF
1	0	0	0	OFF	ON	ON	ON
1	0	0	1	OFF	ON	ON	OFF
1†	0†	1†	0†	OFF†	ON†	OFF†	ON†
1	0	1	1	OFF	ON	OFF	OFF
1	1	0	0	OFF	OFF	ON	ON
1	1	0	1	OFF	OFF	ON	OFF
1	1	1	0	OFF	OFF	OFF	ON
1	1	1	1	OFF	OFF	OFF	OFF

STATION CODE			STATION SELECT SWITCH		
Q6	Q5	Q4	S5	S6	S7
0†	0†	0†	ON†	ON†	ON†
0	0	1	ON	ON	OFF
0	1	0	ON	OFF	ON
0	1	1	ON	OFF	OFF
1	0	0	OFF	ON	ON
1	0	1	OFF	ON	OFF
1	1	0	OFF	OFF	ON
1	1	1	OFF	OFF	OFF

†NORMAL CYBER 18 CONFIGURATION

0477

Figure 5-2. Dual-Channel Communication Line Adapter Equipment, Station Select, and Protect Switch Settings

BAUD RATE SWITCHES (ASYNCHRONOUS MODE ONLY)

BAUD RATE	S1	S2	S3	S4
19.2 K	OFF	OFF	OFF	OFF
9.6 K	OFF	OFF	OFF	OFF
4.8 K	ON	OFF	OFF	OFF
2.4 K	OFF	ON	OFF	OFF
1.2 K	ON	ON	OFF	OFF
600	OFF	OFF	ON	OFF
300	ON	OFF	ON	OFF
150	OFF	ON	ON	OFF
110	X†	X	X	ON

†DON'T CARE

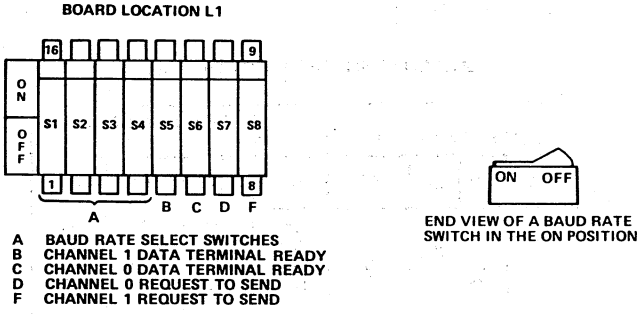

Figure 5-3. Dual-Channel Communication Line Adapter Baud Rate Select and Data Terminal Ready Switches

1. If the modem is a synchronous type (baud rate determined by the modem and not by the communication line adapter switches), switches S1 through S4, located at L1, should all be in the OFF position. If the modem is an asynchronous type, switches S1 through S4 should be set to positions that are applicable to system operation. Refer to figure 5-3.

2. To prevent a constant ON condition for the data terminal ready (DTR) and request to send (RTS) signals, switches S5 through S8, located at L1, should be in the OFF position.

CONTROLLER BOARD INSTALLATION

After all switch selections have been determined and properly set, insert the communication line adapter board into the assigned slot location listed in the board assignment diagrams in section 1.

CAUTION

The controller board must be installed in an A/Q slot only. Damage results if the board is inserted into any DMA slot.

The communication line adapter board must be inserted so that its components are facing left. When ilnserting the card, apply firm thumb pressure at the upper and lower corners of the board to ensure proper seating into the chassis backplane connector.

DIAGNOSTIC TESTING

Perform the manual operating and diagnostic checks according to the diagnostic decision logic tables in the system hardware maintenance manual.

NOTE

The diagnostic tests and routines described in the system hardware maintenance manual can only be performed after the console display, processor, and flexible disk drive or tape cassette (diagnostic load device) installations are complete.

CONSOLE DISPLAY (CC614)

The console display is an input/output device that includes a cathode-ray tube, associated drive electronics, and an alphanumeric keyboard. The console display is capable of character-by-character transmission in a manner consistent with teletypewriter convention (RS232). The console display can transmit a message block up to and including the total display memory size or one line at a time. An operator control is provided to allow operation in character, line, or block mode.

The console display is connected via an interface cable to the I/O-TTY controller board, housed in processor chassis slot K. Options included in the console display depend on the user's application. The XA150-A extended memory feature increases the raster from 960 to 1920 characters.

PARTS AND EQUIPMENT

Parts and Equipment	Equipment No.	Part No.
Console display	CC614-C or CC614-D	15611302 or 15611303
Extended memory	XA150-A	15623200
Cable assembly, 10 feet (3 meters) - Normally supplied	-	96729501 or 88952425†
Cable assembly, 15 feet (4.6 meters) - Not normally supplied but may be ordered by part number (special order only)	-	96729502 or 88952426†
Cable assembly, 15 feet (4.6 meters) - Supplied with CYBER 18-30 Timeshare system	-	96744876 or 88952422†

TEST EQUIPMENT

No special equipment is required to install the console display or its associated equipment.

UNCRATING

The console display is shipped in a heavy-duty cardboard carton and is buffered from shock and impact damage by an industrial filler. The controller interface cable is shipped as a separate item. No special instructions are required to remove the unit or cable.

CRATING

Refer to the uncrating instructions above for crating the unit.

INSPECTION

Inspect the console display as follows:

1. Remove the console display and the cable from the shipping box and check for damage.
2. Check the contents of each carton against the packing list.
3. Examine all connector plugs for possible bent pieces.
4. Remove the rear cover on the console display and check for loose or broken switches, connections, and logic assemblies.
5. Check to see if the printed wiring assemblies are inserted in their designated slots. (See figure 6-1 for printed wiring assembly locations.)
6. Make sure that the printed wiring assemblies and inter-printed wiring assembly cable connectors are properly seated.
7. Check the operation of all switches and controls.

POWER REQUIREMENTS

Refer to section 1 for input power requirements.

The CC614-C Console Display is designed to operate from a nominal input of 120 Vac 50/60 Hz. The CC614-D Console Display is designed to operate from a nominal input of 220 Vac 50 Hz. The unit is adjusted for 50 Hz or 60 Hz operation by a function switch on the control logic printed circuit board. This switch is set to the required position during switch/jumper verification.

To verify the input voltage requirement of the console display, refer to the equipment label at the rear of the unit. If the site voltage is not within the range specified, refer to the 751 conversational display terminal hardware maintenance manual for changes required at the input power transformer.

POWER CABLING

Refer to figure 6-2 for the location and manner of connecting the input power cord of the console display.

SIGNAL CABLING

Attach the keyboard to the console display using the cable provided with the keyboard.

The console display is supplied with a signal cable. To install the signal cable, proceed as described below.

† FCC EMI qualified part. Use of non-qualified parts on FCC EMI verified systems will void the system verification. Refer to section 1, FCC EMI Verification, for details concerning identification and continuation of this verification.

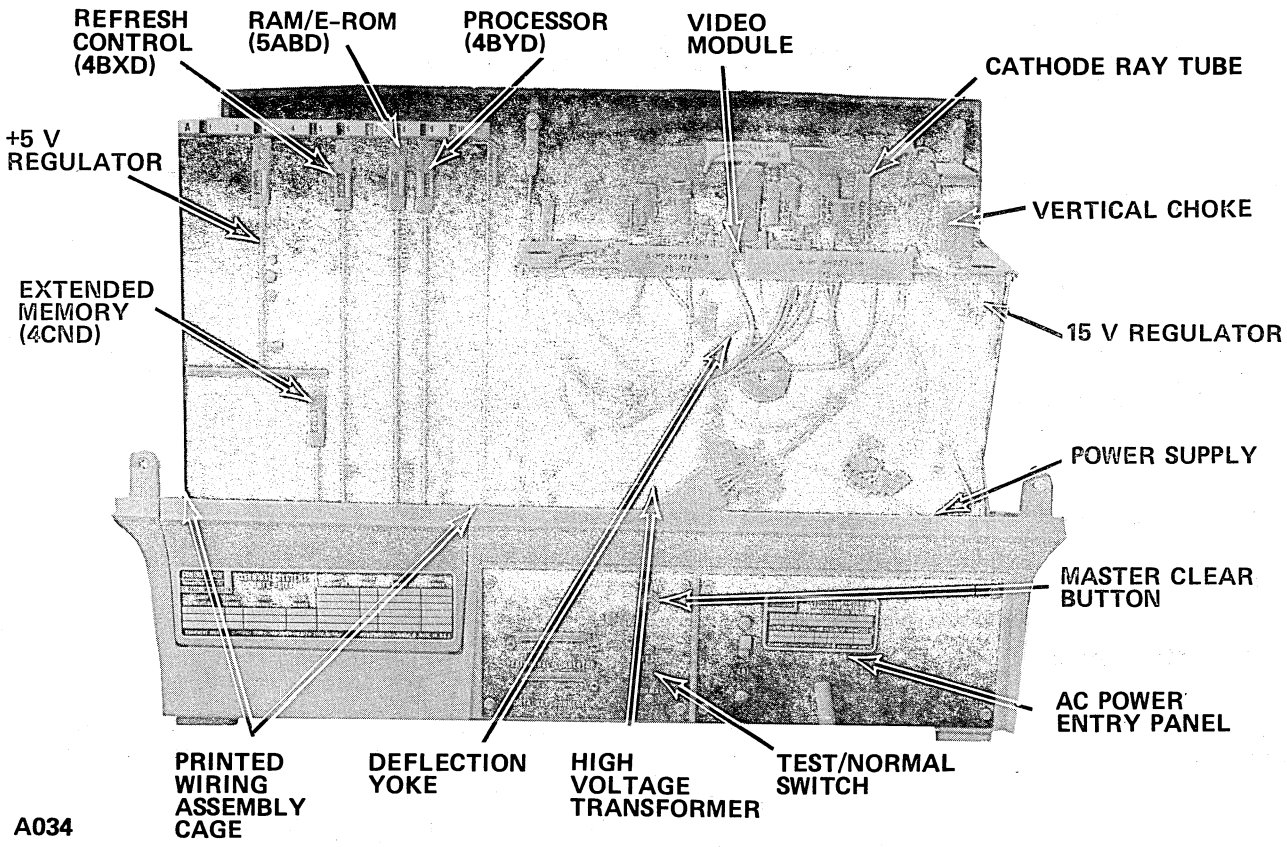

Figure 6-1. Console Display Physical Configuration

CYBER 18-5M/10M/20

1. Attach the signal cable to the processor I/O-TTY controller (slot K) as shown in figure 6-2.
2. Attach the cable shield to the cabinet as illustrated in figure 6-2.
3. Attach the opposite end of the signal cable to the console display rear panel data set connector.

CYBER 18-25 AND 18-30

1. Attach the signal cable to J5 of the dual-CPU multiplexer board.
2. Attach the cable shield to the cabinet as illustrated in figure 6-2.
3. Attach the opposite end of the signal cable to the console display rear panel data set connector.

SWITCH/JUMPER VERIFICATION

INTERNAL SWITCHES

Check the internal switches as follows:

1. Remove the cover hood of the console display by removing the two screws at the rear of the unit (figure 6-2).
2. Carefully pull the hood backward and upward until it is clear of the console display.
3. Verify that the parity and baud rate switches on the processor printed wiring assembly in the printed wiring assembly cage comply with the normal operating configuration as indicated in figure 6-3.
4. Verify that the special function switches on the memory printed wiring assembly in the printed wiring assembly cage comply with the normal operation settings as indicated in figure 6-4.

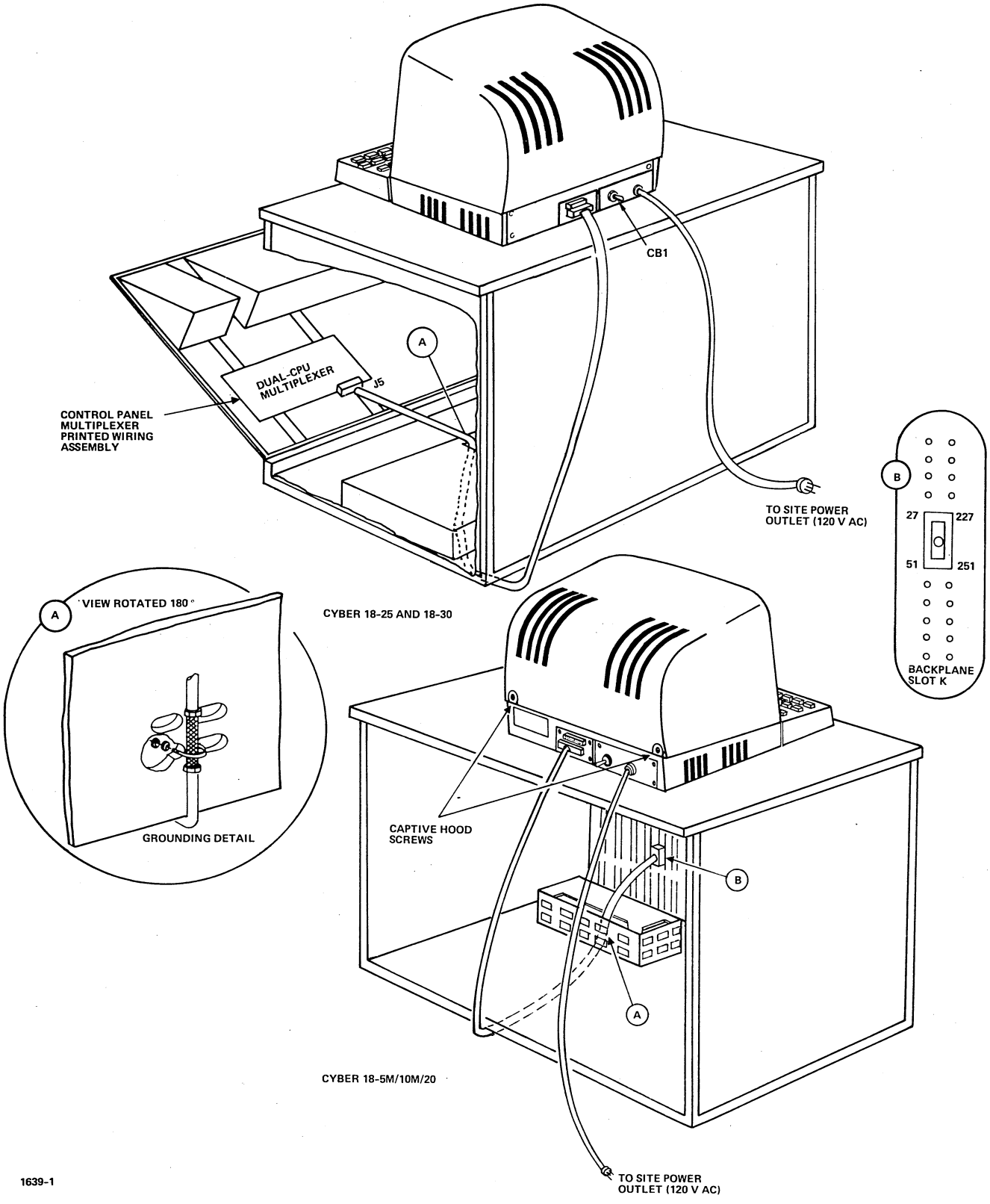

Figure 6-2. CYBER 18 Console Display Signal and Power Cable Connections

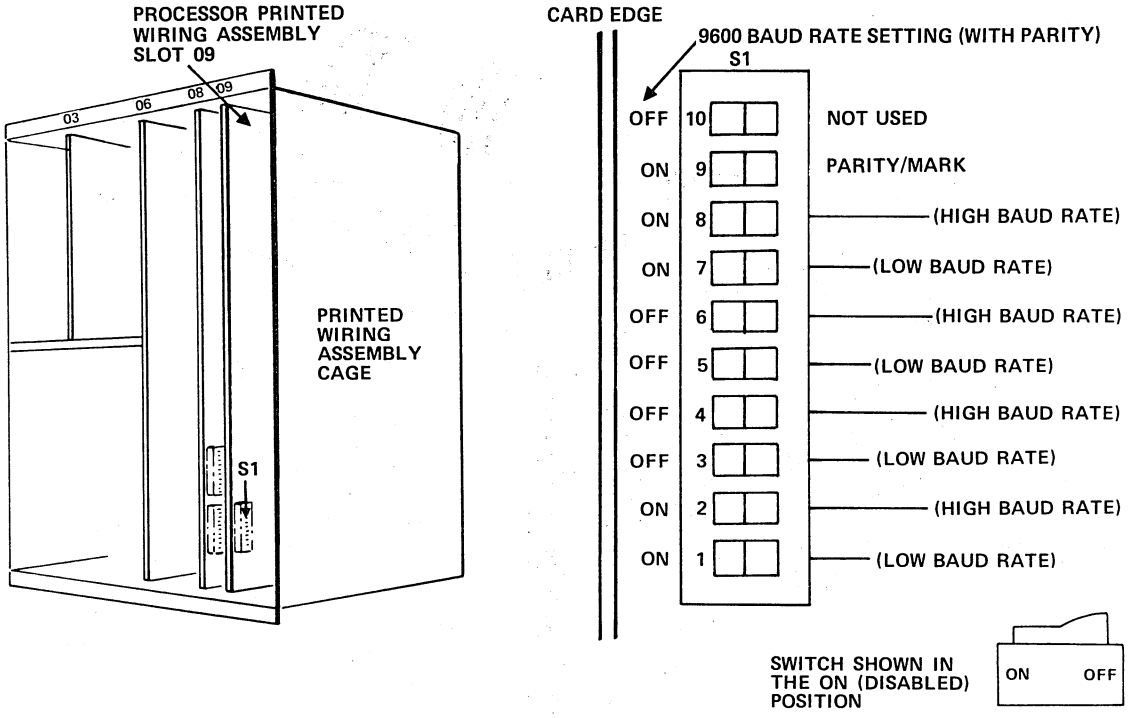

LOW BAUD RATE SELECT

BAUD RATE	S1-7	S1-5	S1-3	S1-1
110	OFF	OFF	OFF	OFF
150	OFF	OFF	OFF	ON
200	OFF	OFF	ON	OFF
300	OFF	OFF	ON	ON
600	OFF	ON	OFF	OFF
1200	OFF	ON	OFF	ON
1800	OFF	ON	ON	OFF
2700	OFF	ON	ON	ON
4800	ON	OFF	OFF	OFF
9600†	ON†	OFF†	OFF†	ON†

HIGH BAUD RATE SELECT

BAUD RATE	S1-8	S1-6	S1-4	S1-2
110	OFF	OFF	OFF	OFF
150	OFF	OFF	OFF	ON
200	OFF	OFF	ON	OFF
300	OFF	OFF	ON	ON
600	OFF	ON	OFF	OFF
1200	OFF	ON	OFF	ON
1800	OFF	ON	ON	OFF
2400	OFF	ON	ON	ON
4800	ON	OFF	OFF	OFF
9600†	ON†	OFF†	OFF†	ON†

PARITY SELECT

	S1-10	S1-9
PARITY†	OFF†	ON†
MARK	OFF	OFF

†NORMAL OPERATION.

Figure 6-3. Console Display Parity and Baud Rate Switch Settings

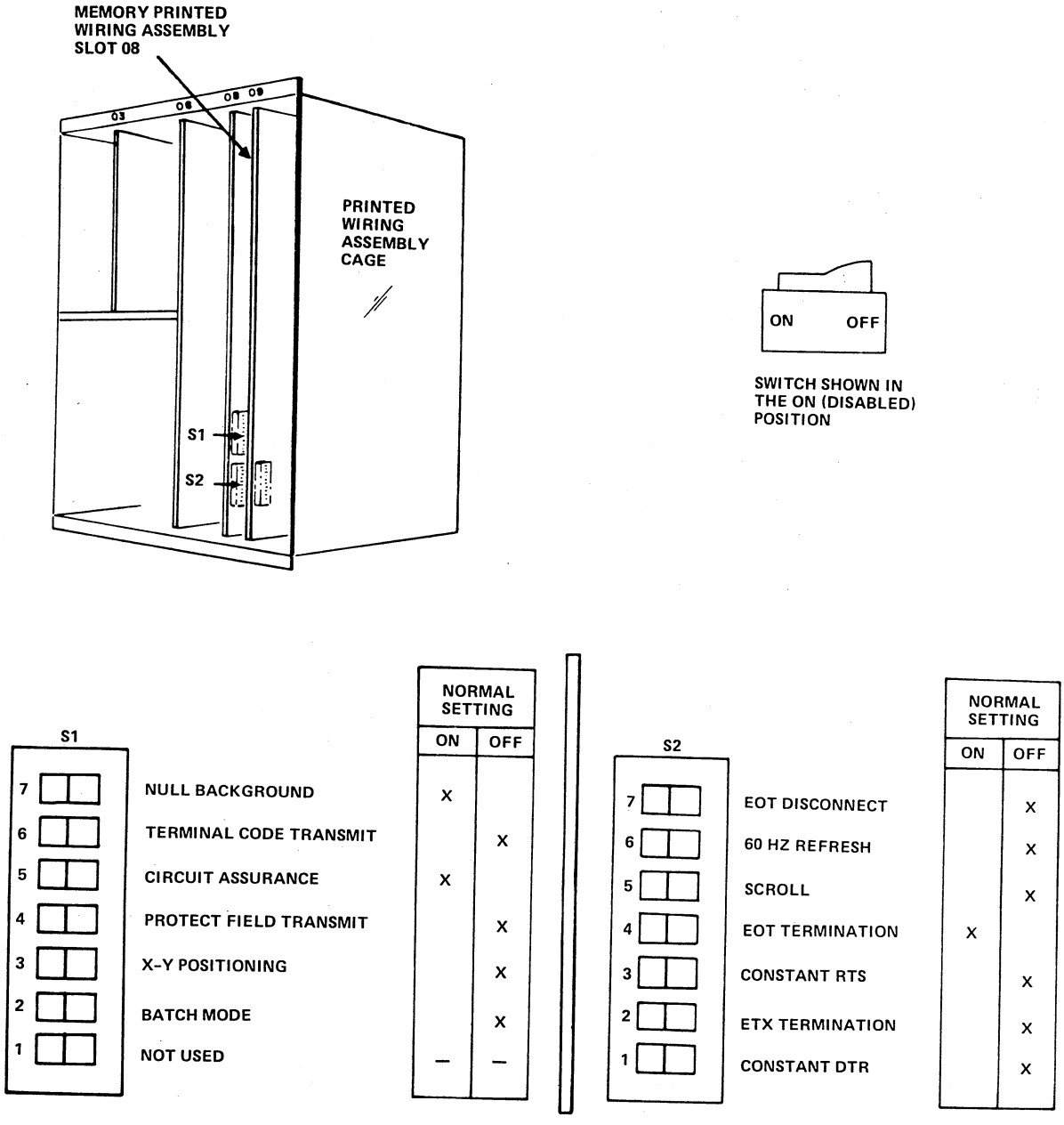

Figure 6-4. Console Display Special Function Switches

5. Replace the hood, reversing the process by which it was removed.

EXTERNAL SWITCHES

Verify that the external switch settings of the console display comply with the positions shown in figure 6-5.

I/O-TTY CONTROLLER BAUD RATE SELECT SWITCHES

To verify the normal operating positions of the switches on the I/O-TTY controller, the board must be removed from the chassis. This is done by first opening the cabinet right access panel and turning the two captive latches on the cover plate one-quarter turn counterclockwise. Attached to the cover plate is an extractor tool for removing the I/O-TTY controller from slot position K.

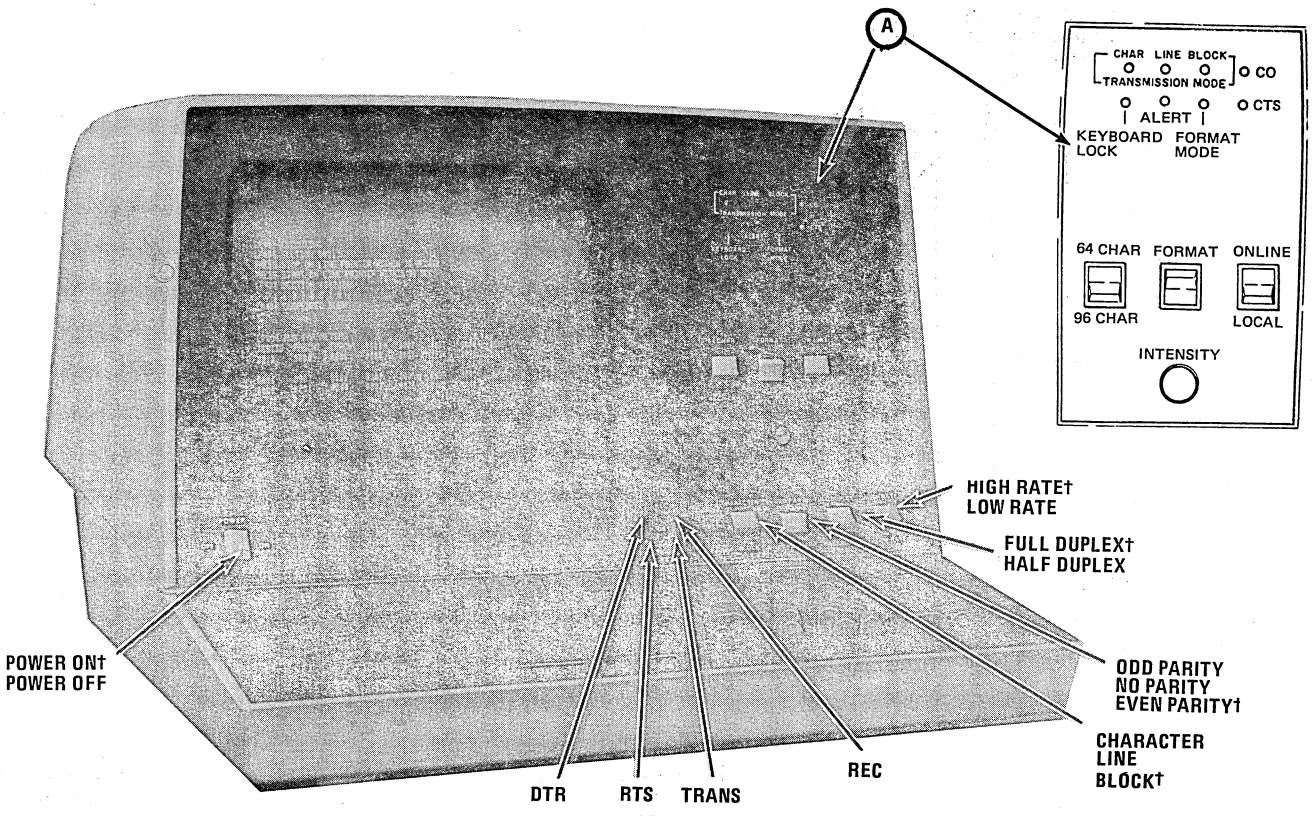

†NORMAL OPERATING POSITION

A005

Figure 6-5. Console Display Control Panel Switch Settings

Figure 6-6 illustrates the location and normal operating positions of the baud rate select switches.

After verifying that the baud rate select switches are in the normal configuration, return the board to slot position K. Apply firm thumb pressure at the upper and lower corners of the front of the board until it is fully seated within the backplane connector.

Return the extractor tool and module cover plate to the chassis. Close the right access panel.

OFFLINE TESTING

NOTE

The test mode provides a means of testing the operation of the terminal without elaborate test facilities. It is intended to establish a high degree of confidence in the operational status of the terminal and aid fault isolation below terminal level. Errors are indicated by an audible alarm and an ALERT indicator.

Perform offline testing as follows:

1. Turn CB1 off at the rear of the console display and plug the ac power cable into the site power receptacle as required by the system configuration.

2. Place the TEST/NORMAL switch to the TEST position. See figure 6-1 for the switch location.

3. Set the control switches at the front of the console display to the positions indicated in figure 6-5. At the rear of the console display, set CB1 to the on (up) position and depress the MASTER CLEAR switch. After a short delay, the test mode should start to run. The following message is displayed:

   0F00 00 0E00 00 0D00 00 0C00 00 0B00 00 0A00 00
   0900 00 0800 00 0700 00 0600 00 0500 00 0400 00
   0300 00 0200 00 0100 00 0000 00

I/O-TTY CONTROLLER BOARD (COMPONENT SIDE)

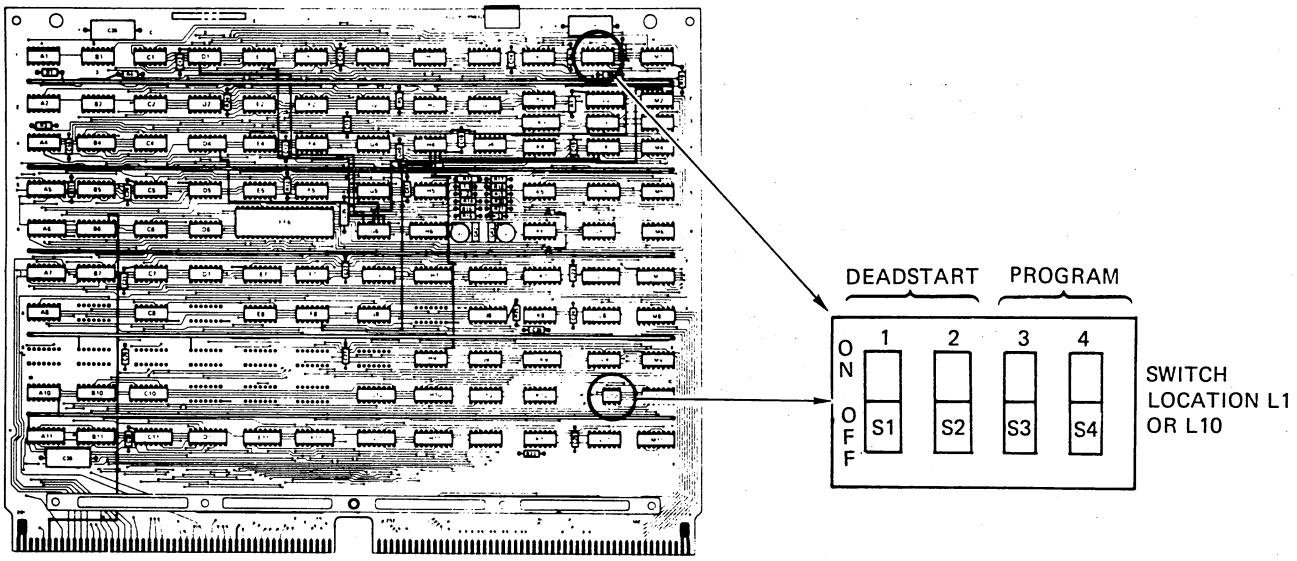

BAUD RATE SELECT (LOCATION L1 OR L10)

RATE	DEADSTART		PROGRAM	
	SWITCH POSITION 1	SWITCH POSITION 2	SWITCH POSITION 3	SWITCH POSITION 4
110	ON	ON	ON	ON
300	ON	OFF	ON	OFF
1200	OFF	ON	OFF	ON
9600†	OFF	OFF	OFF	OFF
†NORMAL OPERATING POSITION				

0471

Figure 6-6. I/O-TTY Controller Board Baud Rate Select

DIAGNOSTIC TESTING

Perform the manual operating and diagnostic checks according to the diagnostic decision logic tables in volume 2 of the system hardware maintenance manual.

NOTE

The diagnostic tests and routines described in the system hardware maintenance manual can only be performed after the console display, processor, and flexible disk drive or tape cassette (diagnostic load device) installations are complete.

The card reader is a table-top-mounted device for reading 80-column ANSI-compatible cards at the rate of either 300 or 600 cards per minute. The card reader has a reflective read station, an input hopper, and a stacker capacity of 1,000 cards. The card reader has internal switches that allow selection of online and offline operation.

The controller (card reader/line printer or card reader/line printer/CLA) is designed to be inserted into board location J of the processor chassis. For alternate slot locations, see section 1. The board contains press-in wire jumpers for selecting equipment code, program protect, interrupt, and enable/disable selects for both controller functions. An interface signal cable connects the card reader to the backplane pins of the micro processor chassis (figure 7-1).

PARTS AND EQUIPMENT

Parts and Equipment	Equipment Number	Part Number
Card reader	CB104-K or CB104-L	83894610 83801313
Card reader/line printer controller or Card reader/line printer/ CLA controller	FH301-A FC109-A	88909503 89600188

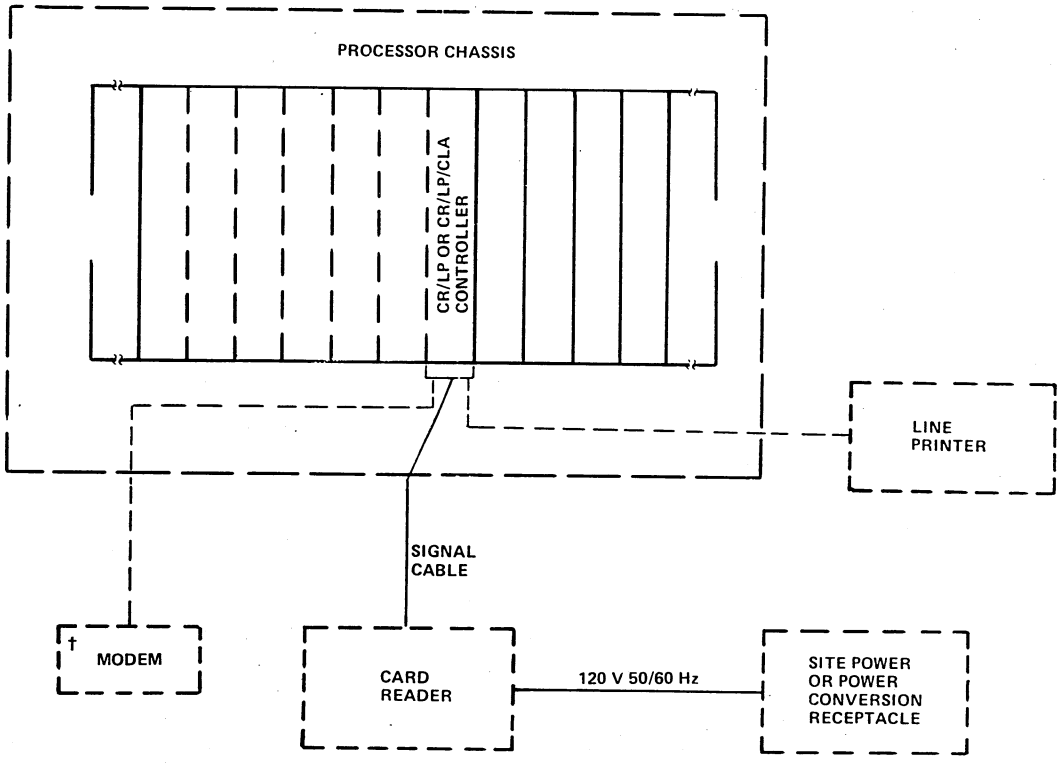

†OPTION IF CR/LP/CLA CONTROLLER IS INSTALLED.
2191

Figure 7-1. Card Reader Block Diagram

Parts and Equipment	Equipment Number	Part Number
Cable assembly, 15 feet (4.6 meters)	--	88894500 or 96870918
Cable assembly, 10 feet (3 meters) - Normally supplied as part of the YA119 Finalization Kit	--	88894501 or 96870917
Cable assembly, 7 feet (2.1 meters) - Not normally supplied but may be ordered by part number	--	88894502 or 96870916

TEST EQUIPMENT

No special equipment is required to install the card reader and its associated equipment.

UNCRATING

The card reader unit is shipped in a heavy-duty cardboard carton and is buffered from shock and impact damage by an industrial filler. The card-reader-to-controller interface cable is shipped as a separate item. No special instructions are required to remove the unit or the cable.

CRATING

Refer to Uncrating above for crating the unit.

INSPECTION

Inspect the card reader as follows:

1. Remove the card reader from its shipping carton and check for external damage.
2. Place the card reader in its assigned physical location according to the site specification.
3. Rotate both output stacker spring assemblies by hand before applying power. The stacker bearings may tend to stick after prolonged periods of storage (figure 7-2).

POWER REQUIREMENTS

Refer to section 1 for the card reader input power requirements.

POWER CABLING

Connect the ac power cord to the site power or power conversion receptacle.

SIGNAL CABLING

To connect a CR/LP/CLA cable interface board, refer to section 21. To connect a CR/LP controller, see figure 7-3.

Install the signal cables as shown in figure 7-3. If the card reader offline test has not been performed, perform the test prior to connecting the signal cable.

OFFLINE TESTING

Offline testing is performed prior to connecting the card reader to the processor chassis.

1. Open the rear panel of the card reader as illustrated in figure 7-4.
2. Release the two hold-down screws on the data board (figure 7-4). Lift up the board and observe the polarity and function switches. Refer to table 7-4 and figure 7-4 and set them up for offline operation.
3. Turn the card reader power ON/OFF switch, S1 (figure 7-3), at the rear of the card reader to ON.

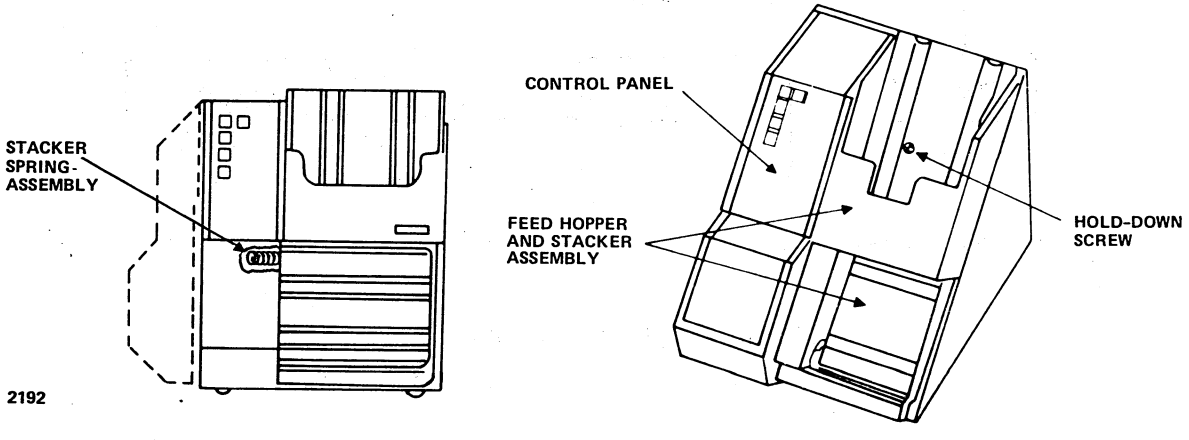

Figure 7-2. Card Reader Inspection

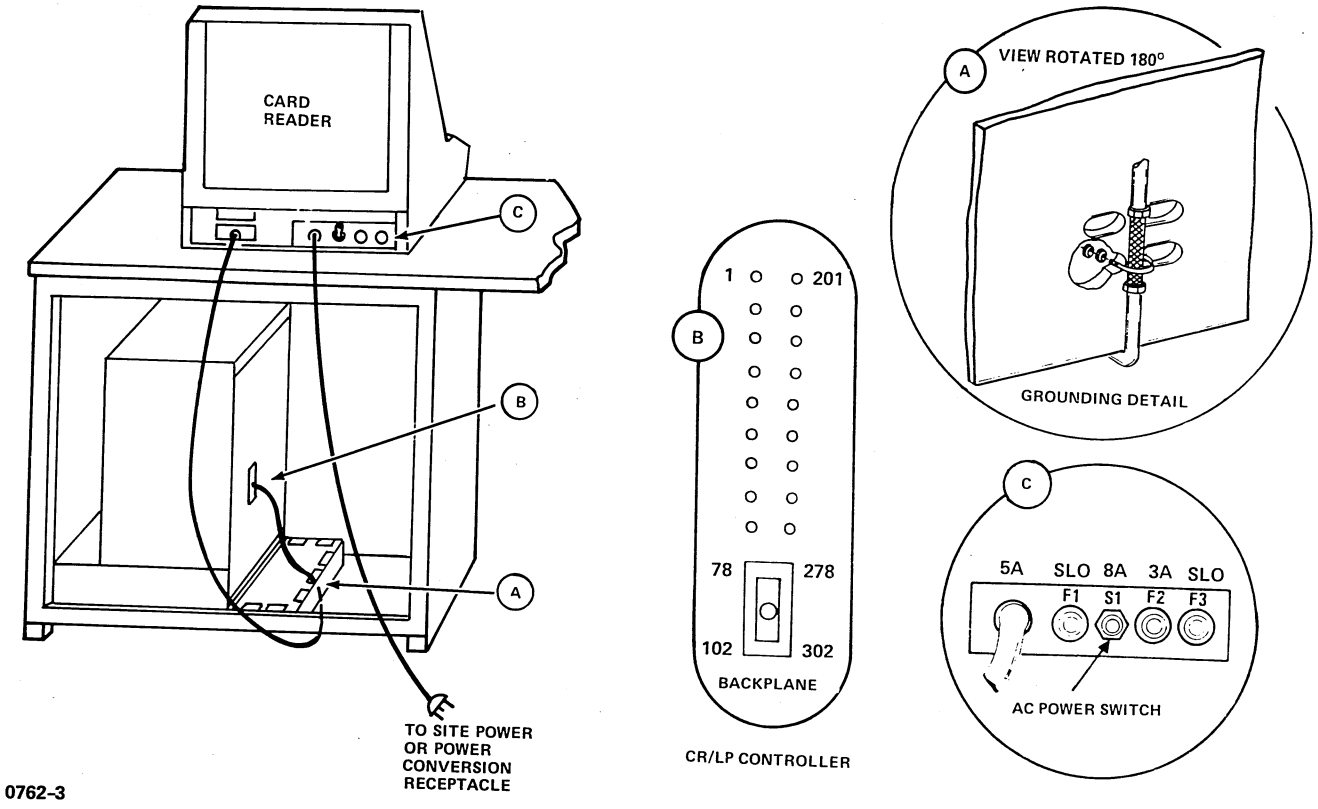

Figure 7-3. CYBER 18 Card Reader Signal and Power Cable Connections

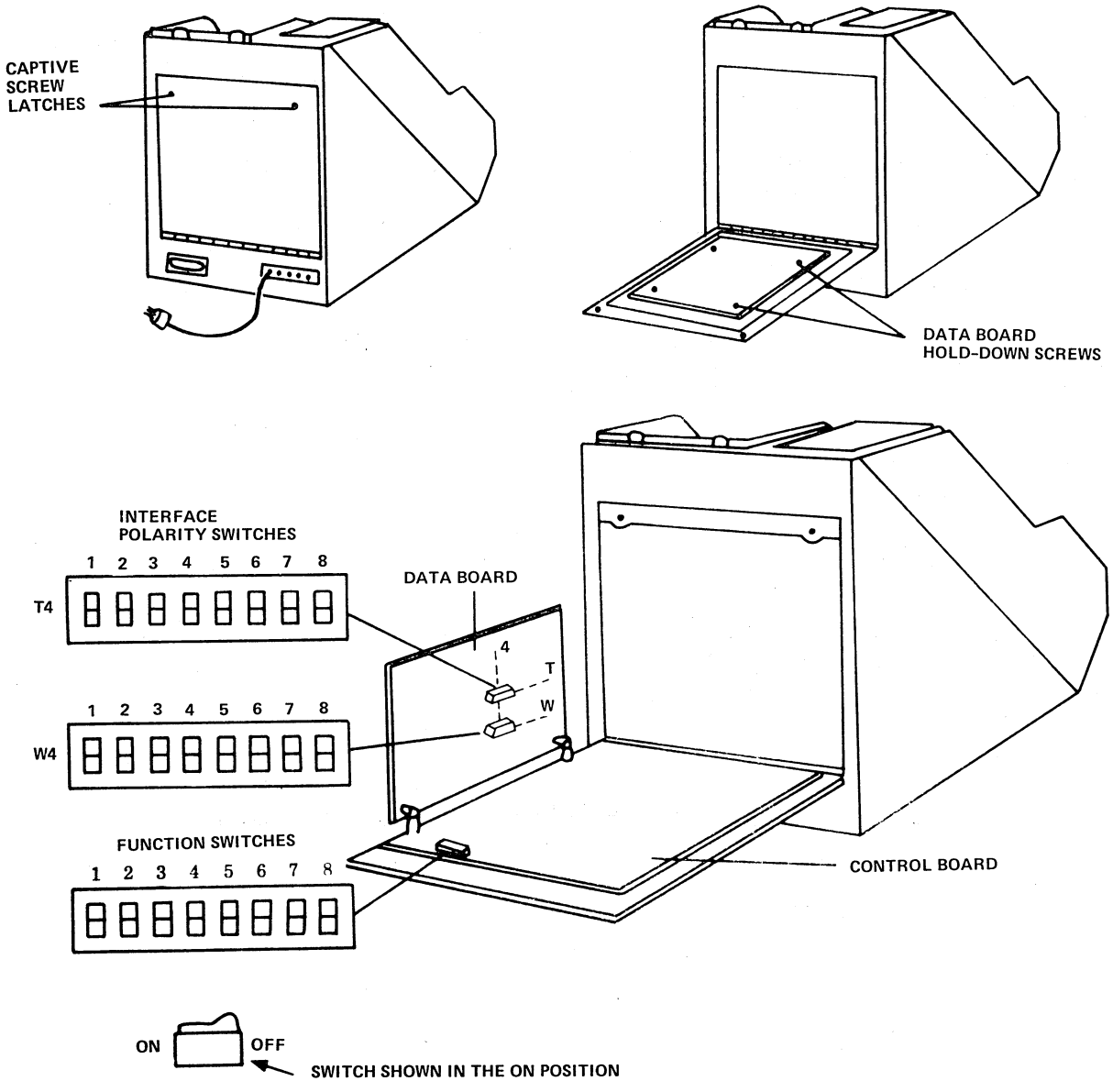

0191

Figure 7-4. Card Reader Feature Switches

4. Place a card deck with any punched configuration into the hopper; replace the card weight on top of the cards. Depress RESET on the card reader control panel to process the cards through the reader.

NOTE

If any card reader problems are experienced, refer to the card reader subsystem hardware maintenance manual for troubleshooting procedures.

5. Set test feed switch to ON during card feed test and to OFF for normal operation.

6. Set the card reader switches to their normal positions as indicated in table 7-1 and figure 7-4.

7. Connect the signal cable (figure 7-3) to the processor.

SWITCH/JUMPER VERIFICATION

CARD READER

Check the card reader switches as follows:

1. Open the rear panel of the card reader as illustrated in figure 7-4.

2. Verify that the interface signal polarity switches and the function switches comply with the normal operating configuration as indicated in table 7-1 and figure 7-5.

3. Close the rear panel of the card reader.

CARD READER CONTROLLER

NOTE

For CR/LP/CLA controller switch settings refer to section 21.

Check the card reader controller as follows:

1. Open the processor cabinet front access door or panel.

2. Remove the chassis cover plate by turning the two captive latches on the bottom of the plate one-quarter turn counterclockwise.

3. Using the extractor tool located on the cover plate, remove the controller board from slot position J.

4. Verify that the equipment select jumpers on the controller board comply with the normal operating configuration indicated in figure 7-6.

5. Verify that the interrupt jumpers comply with the normal operating configuration indicated in figure 7-7.

6. Verify that the protect jumpers comply with the normal operating configuration indication in figure 7-8.

7. Return the board to the chassis, ensuring that the components on the board are facing left. Apply firm thumb pressure at the upper and lower corners of the board until the board is well seated into the chassis backplane connector.

DIAGNOSTIC TESTING

Perform the manual testing and diagnostic checks according to the diagnostic decision logic tables in the CYBER 18 Computer Systems Central Processor Hardware Maintenance Manual and Card Reader Subsystem Hardware Maintenance Manual.

NOTE

The diagnostic tests and routines described in the CYBER 18 computer system central processor hardware maintenance manual can only be performed after the console display, processor, and flexible disk drive or tape cassette or card reader (diagnostic load device) installations are complete.

TABLE 7-1. CARD READER FUNCTION AND INTERFACE POLARITY SWITCH SETTINGS

Switch	Switch Identification	Normal Position	Test Mode Position
Interface Polarity			
T4 - S1	Unused	OFF	OFF
T4 - S2	DP	ON	ON
T4 - S3	DSP	ON	ON
T4 - S4	HEP	ON	ON
T4 - S5	BP	OFF	OFF
T4 - S6	IP	ON	ON
T4 - S7	SFP	ON	ON
T4 - S8	CSP	ON	ON
W4 - S1	ESP	ON	ON
W4 - S2	EPP	ON	ON
W4 - S3	EFP	ON	OFF
W4 - S4	SEP	ON	ON
W4 - S5	FEP	ON	ON
W4 - S6	MEP	ON	ON
W4 - S7	RCP	ON	ON
W4 - S8	RP	OFF	OFF
Function Switch			
S1	Card clock	OFF	OFF
S2	51 column	OFF	OFF
S3	Slow	ON†	OFF
S4	Feed start	OFF	ON
S5	Time out	OFF	OFF
S6	Timeout ready	OFF	OFF
S7	Error	OFF	OFF
S8	Resync	OFF	OFF

†For the 600 card/minute reader, this switch is set to off.

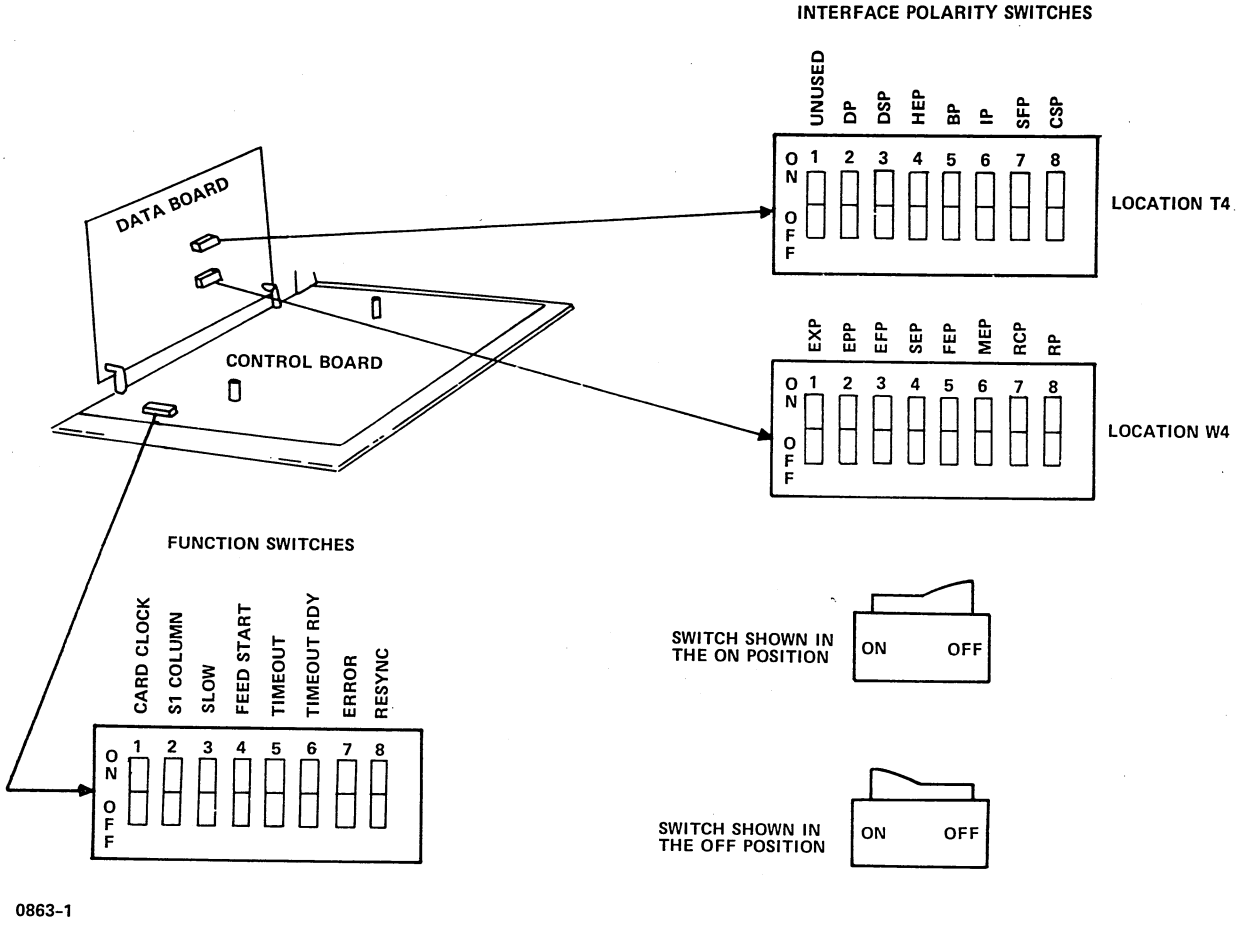

Figure 7-5. Card Reader Function and Interface Switches

CARD READER/
LINE PRINTER
CONTROLLER BOARD
COMPONENT SIDE -
PART NUMBER 88788600

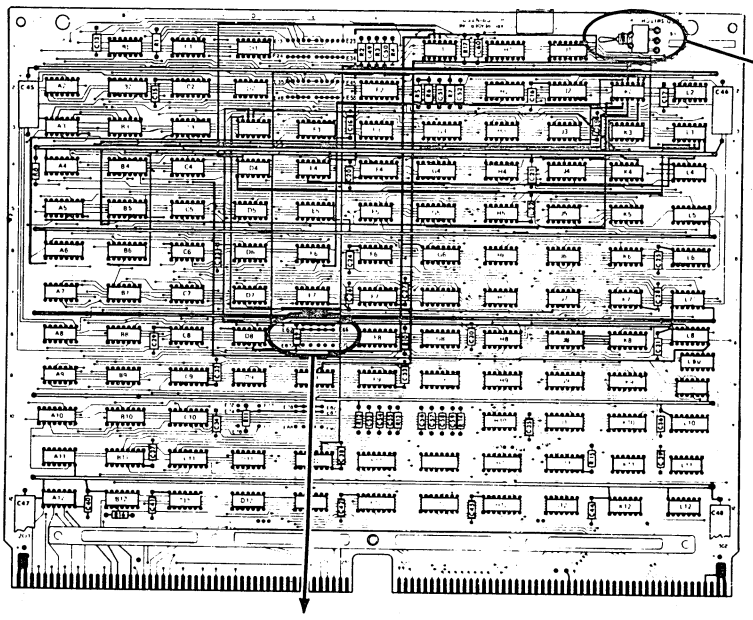

EQUIPMENT CODE SELECT TABLE

EQUIPMENT CODE (HEX)	CONNECT JUMPERS FROM			
	E67 TO	E68 TO	E69 TO	E71 TO
1	E62	E58	E59	E61
2	E57	E63	E59	E61
3	E62	E63	E59	E61
4	E57	E58	E64	E61
5	E62	E58	E64	E61
6	E57	E63	E64	E61
7	E62	E63	E64	E61
8	E57	E58	E59	E66
9	E62	E58	E59	E66
A	E57	E63	E59	E66
B†	E62	E63	E59	E66
C	E57	E58	E64	E66
D	E62	E58	E64	E66
E	E57	E63	E64	E66
F	E62	E63	E64	E66

†NORMAL SYSTEM CONFIGURATION: EQUIPMENT SELECT = B_{16}. CARD READER IS ENABLED

2193

Figure 7-6. Card Reader/Line Printer Controller Interface Board Equipment Jumpers

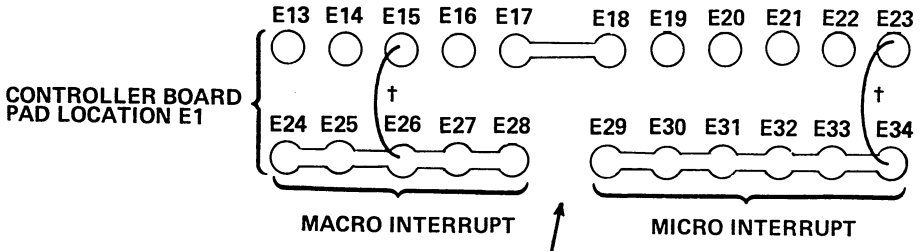

CARD READER/ LINE PRINTER CONTROLLER BOARD COMPONENT SIDE - PART NUMBER 88788600

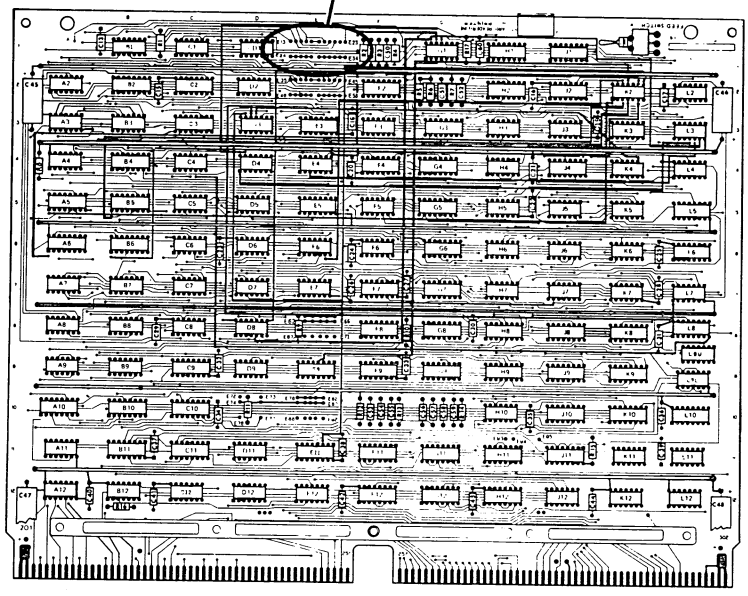

MACRO INTERRUPT CONFIGURATIONS (LOCATION E1)

OPTION	JUMPER ONLY
NO MACRO INTERRUPTS	E17 TO E28
ENABLE ALL MACRO INTERRUPTS (COMMON)	E15 TO E26†
ENABLE MACRO INTERRUPTS ON:	
DATA AVAILABLE	E13 TO E24
END OF OPERATION	E16 TO E27
ALARM	E14 TO E25

†NORMAL SYSTEM CONFIGURATION

MICRO INTERRUPT CONFIGURATIONS (LOCATION E1)

OPTION	JUMPER ONLY
NO MICRO INTERRUPTS	E18 TO E29
AUTO-DATA TRANSFER	E23 TO E34 †
ENABLE ALL OF THE BELOW (COMMON)	E20 TO E31
ENABLE MICRO INTERRUPTS ON:	
DATA AVAILABLE	E22 TO E33
END OF OPERATION	E19 TO E30
ALARM	E21 TO E32

0473

Figure 7-7. Card Reader/Line Printer Controller Interface Board Interrupt Jumpers

CARDREADER/LINE PRINTER CONTROLLER BOARD (COMPONENT SIDE) - PART NUMBER 88988600

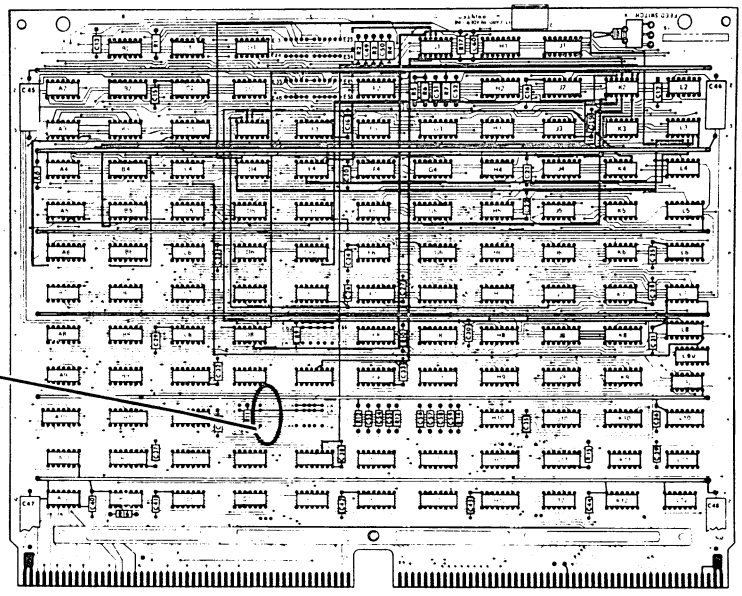

CONTROLLER BOARD PAD LOCATION D10

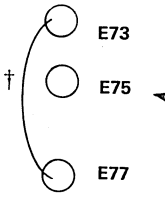

PROTECTED OPTION

PROTECTED	UNPROTECTED
E77 TO E75	E77 TO E73†

†NORMAL SYSTEM CONFIGURATION

0474

Figure 7-8. Card Reader/Line Printer Controller Interface Board Protect Jumpers

The 300-line-per-minute drum line printer is housed in a quietized cabinet, which is mounted on heavy-duty casters for maneuverability. The printer has a 64-character drum, 136 columns, format channels, a self-testing print feature, and preprint capability.

The multiequipment controller board resides in slot J of the processor chassis. Alternate slot locations are listed in section 1.

The controller contains equipment code, program protect, interrupt, and controller enable/disable select jumpers for all controllers. An interface signal cable connects the line printer to the backplane pins of the processor.

PARTS AND EQUIPMENT

Parts and Equipment	Equipment Number	Part Number
Line printer (300 line/min.) (120 V, 60 Hz)	CL408-C or CL411-C	59690802 or 91846102
or Line printer (300 line/min.) (120 V, 50 Hz	CL408-D or CL411-D	59690803 or 91846103
Printer ribbon		94330700
Format tape		44713800
Cable assembly, 20 feet (6.1 meters) - Normally supplied as part of the CY117 Finalization Kit		88894600 or 96870921 or 96870925†
Cable assembly, 50 feet (15.2 meters) (optional)		88894603 or 96870924 or 96870928†

TOOLS REQUIRED

The following tools are required:

- 9/16-inch open-end wrench
- Side cutters (optional)
- Feeler gauge, 0.002 inch
- Screwdriver, 14-inch medium blade
- Fork lift or suitable lifting device (for removing the printer from the air shipment skid)
- Set of Allen wrenches
- Plastic mallet
- Format tape (prepunched for ODS format)

UNCRATING

WOODEN CONTAINER (AIR SHIPMENT)

Uncrate the line printer from its wooden container as follows:

1. Cut the banding and remove the crate top, sides, and ends.
2. Remove the cushioning materials from the top and corners of the printer.
3. Cut the strapping around the printer and remove the plastic dust cover.
4. Cut the strapping that holds the wooden mounting assemblies to the printer base.
5. Remove the printer from the skid with a fork lift as follows:
   a. Enter from the front with the forks close together.
   b. Lift the printer slowly; ensure that it does not tip.
   c. Slide the skid out of the way and lower the printer back to the floor.
6. Proceed with steps 3 through 9 of the corrugated container procedure below.

CORRUGATED CONTAINER (VAN SHIPMENT)

Remove the corrugated container from the line printer as follows:

1. Remove the corrugated container.
2. Cut the strapping and remove the plastic dust cover.

CAUTION

Use extreme care in opening the top hood. The hood hinges, located on the back of the printer, are made of plastic and break easily.

3. Open the printer access window and remove the caution card. Retain this card.
4. Open the front access door and remove the print samples, manuals, and paper basket.

† Meets FCC EMI requirements.

5. Unlatch the two top section locking screws and swing the top section of the cabinet to the rear. The locking screws are located at the front lower flange area of the top section.

6. Remove the wedges installed between the print head chassis and the lower cabinet.

7. Remove the Ty-Wrap from the latch at the left end of the printer drum gate.

8. Remove the tape holding the Mylar shield to the ribbon switching part.

CAUTION

Use extreme care when moving the printer. It is mounted on casters and is difficult to control once it is rolling.

9. Roll the line printer to its intended operating location.

CRATING

Crate the line printer as follows:

1. Using masking tape, secure the Mylar shield to the ribbon switching post.

2. Secure the latch on the left end of the drum gate with a Ty-Wrap.

3. Insert wooden wedges between the print lead chassis and the lower cabinet.

4. Latch the two top locking screws located at the front lower flange area of the top section.

5. Using a fork lift or hydraulic roller lift with the forks close together, enter the front of the printer, and lift the printer (figure 8-1).

6. Place the printer on the skid.

7. Secure the wooden mounting assembly to the printer base with steel strapping.

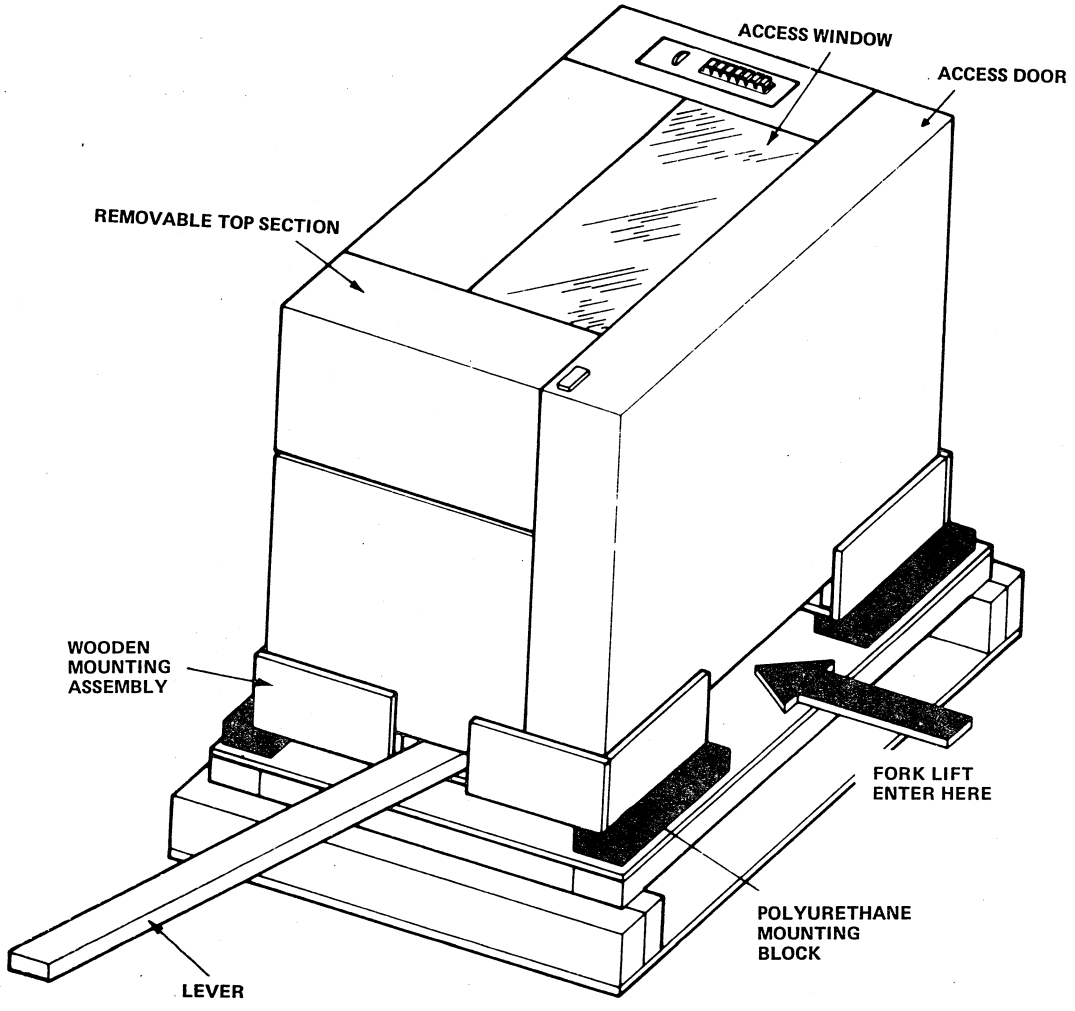

Figure 8-1. Printer Uncrating

8. Cover the printer with a plastic dust cover and secure the cover with masking tape.

9. Install the cushioning material at the top and corners of the printer.

10. Install the crate top and secure the top to the skid with steel bands.

INSPECTION

Inspect the line printer in the following manner.

1. Inspect the line printer for physical damage, such as impact damage, surface dents and scratches, and so forth.

2. Inspect the signal cable for damage to the connectors, the cable cover, and other equipment.

INSTALLATION

LEVELING

When installed, the printer may need to be leveled to obtain an acceptable printout. The printer cabinet is mounted on four adjustable casters (see figure 8-2). These provide enough adjustment to compensate for most floor conditions. The printer leveling should be checked using a 0.002-inch feeler gauge (see figure 8-3). The feeler gauge is used to check the gapping between the drum gate casting and the gate stop surfaces:

1. Remove the black plastic shroud cover from the drum gate frame.

2. To check the gapping, open the drum gate and close it slowly until one of the stop surfaces makes contact. The gap at the end not making contact must be less than 0.002 inch. If the gap exceeds 0.002 inch, the front caster height on the excessive gap side must be adjusted.

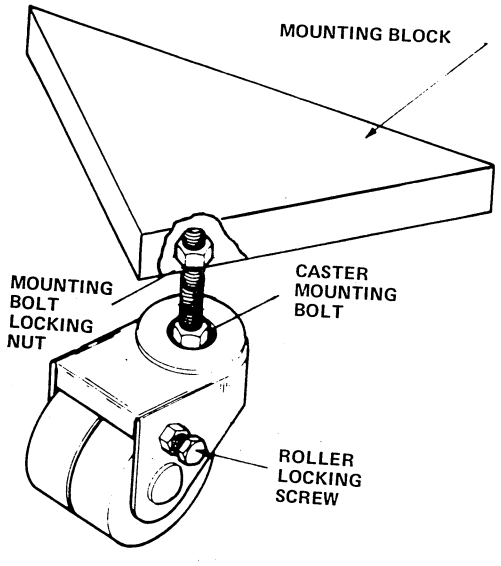

0386A Figure 8-2. Line Printer Caster

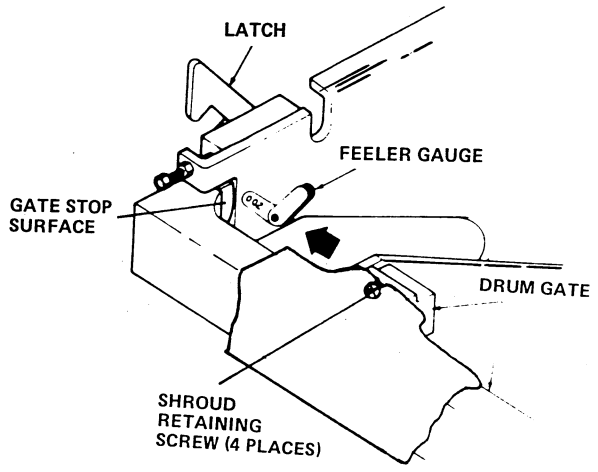

0386

Figure 8-3. Line Printer Installation Leveling

3. To adjust the caster height, use a 9/16-inch open-end wrench to loosen the mounting bolt locking nut. Screw the caster mounting bolt into or out of the mounting block (figure 8-2).

4. When the gap is reduced to the proper clearance, tighten the mounting bolt locking nut against the mounting block.

5. When the leveling procedure is completed, the roller locking screws should be tightened on all four wheels. This prevents the printer from moving once it is installed.

PRELIMINARY PARTICLE UNIT CHECKS

Before applying ac power to the printer, check the vertical advance clutch and brake. The clutch and brake are two separate magnetic particle clutches. In shipping, the magnetic particles settle and can pack solid, so they must be loosened. The following is a check of the clutch and brake following shipment or movement of the printer that includes extended periods of vibration:

1. Open the format reader to protect the channel brushes.

2. To check the brake, turn the main forms control knob counterclockwise without pulling the knob out. If the brake is frozen, the knob does not turn. If the brake is free, the knob rotates.

3. If the brake is frozen, rock the knob while tapping the casting at point A in figure 8-4 with a plastic mallet until the knob turns freely.

4. Rotate the flywheel; it should rotate freely if the clutch is free.

5. If the clutch is initially frozen, rock the flywheel while tapping point A with a plastic mallet until the flywheel turns freely.

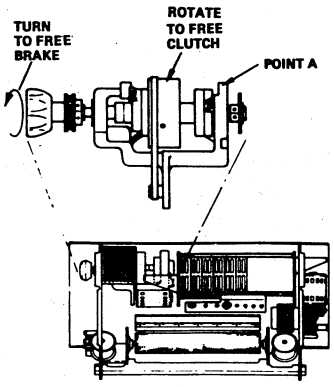

Figure 8-4. Freeing the Particle Unit

POWER REQUIREMENTS

The line printers are available in two power configurations, 60 Hz and 50 Hz. The 60 Hz printer operates with a voltage input between 104 V ac and 128 V ac. The 50 Hz printer uses a multitapped transformer to allow operation between 190 V ac and 235 V ac.

For power demand information, refer to section 1.

POWER CABLING

The line printer is received with a power cord installed. (The power plug may have to be replaced to meet local requirements.)

NOTE

Compare the unit name plate data (that is, primary power rating) to that of the available power source to ensure compatibility.

Compare the line printer power plug to the proper site power source.

SIGNAL CABLING

To connect the line printer signal interface cable to the controller, perform the following steps:

1. If connecting a CR/LP/CLA cable interface board, refer to section 21; if connecting a CR/LP controller, see figure 8-5.

   Install the signal cable as shown in figure 8-5.

2. Attach the cable shield to the line printer and cabinet as shown in figure 8-5.

3. Attach the other end of the cable to connector 4J109 located at the rear of the line printer.

4. Remove the Allen head screw on the logic chassis of the line printer (figure 8-5).

5. Use this set screw to attach the cable shield pigtail.

SWITCH/JUMPER VERIFICATION

EQUIPMENT JUMPERS

To verify the equipment jumpers on the card reader/line printer controller, the board must be removed from the chassis as follows:

1. Open the right access panel of the cabinet and remove the chassis cover plate. An extractor tool for removing the board is attached to the cover plate. Remove the board from slot J or alternate slot.

2. Once the board is removed, verify that the equipment jumpers comply with the normal operating congfiguration shown in figure 8-6.

INTERRUPT JUMPERS

Verify that the interrupt jumpers comply with the normal operating configuration shown in figure 8-7.

PROTECT JUMPERS

Verify that the protect jumpers comply with the normal operating configuration shown in figure 8-8.

PARITY JUMPERS

Verify that the parity jumpers comply with the normal operating configuration shown in figure 8-9.

Return the card reader/line printer controller board to the chassis, ensuring that the components on the board are facing left. Apply firm thumb pressure at the upper and lower corners of the board until it is well seated into the chassis backplane connector. Replace the extractor tool, chassis cover, and side panel.

LINE PRINTER SWITCH SETTINGS

Power-On Circuit Breaker

This switch must be set to the ON position for normal line printer operation. Figure 8-10 illustrates the location of this switch.

Lines-Per-Inch Select

The line printer provides a switch for selecting either six or eight horizontal lines of character print information for each inch of form's vertical motion.

The settings of this switch is six lines or eight lines per inch and must be compatible with the punched hole format of the format paper tape for proper line-per-inch printer operation.

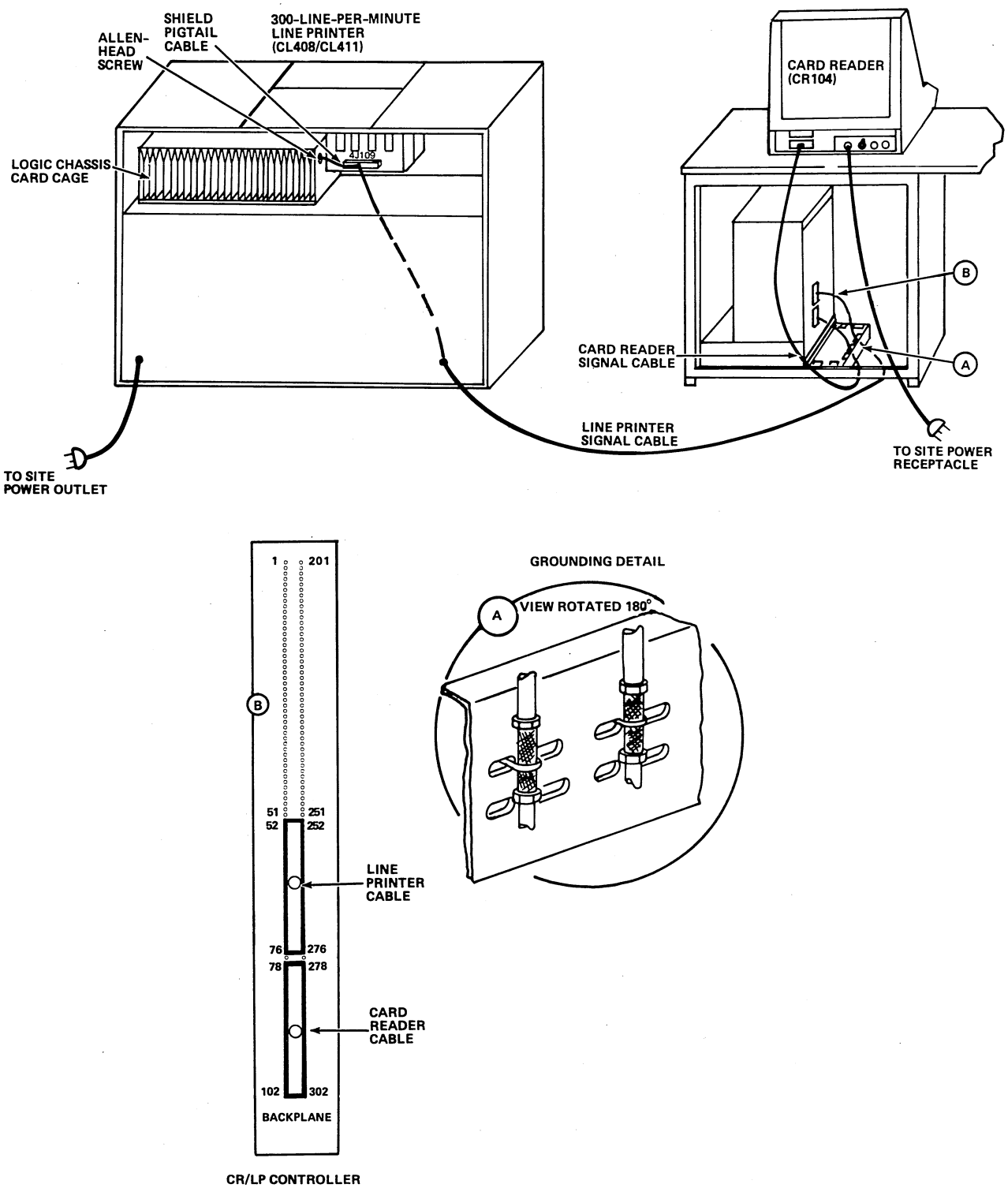

Figure 8-5. CYBER 18 Line Printer Signal and Power Cable Connections

CARD READ/LINE PRINTER CONTROLLER (COMPONENT SIDE)

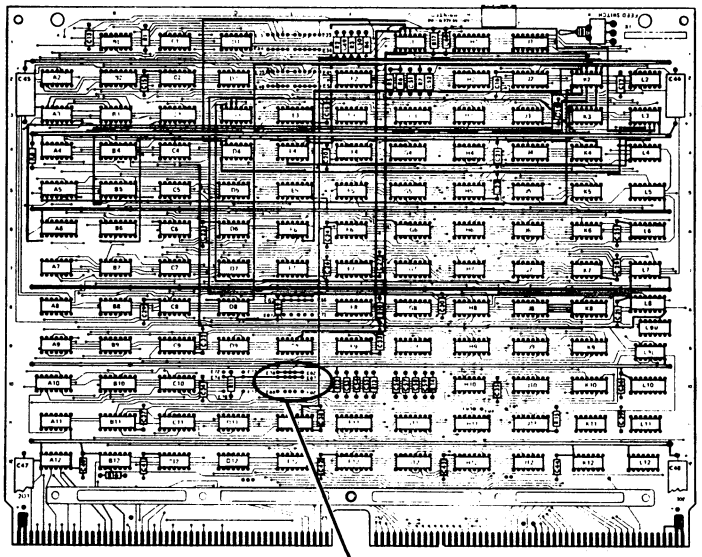

EQUIPMENT CODE SELECT TABLE

EQUIPMENT CODE (HEX)	CONNECT JUMPERS FROM			
	E88 TO	E89 TO	E90 TO	E92 TO
1	E83	E79	E80	E82
2	E78	E84	E80	E82
3	E83	E84	E80	E82
4	E78	E79	E85	E82
5	E83	E79	E85	E82
6	E78	E84	E85	E82
7	E83	E84	E85	E82
8	E78	E79	E80	E87
9	E83	E79	E80	E87
A	E78	E84	E80	E87
B	E83	E84	E80	E87
C	E78	E79	E85	E87
D	E83	E79	E85	E87
E	E78	E84	E85	E87
F	E83	E84	E85	E87

†NORMAL SYSTEM CONFIGURATION: EQUIPMENT SELECT 4_{16}. LINE PRINTER ENABLE/DISABLE IS ENABLED.

LOCATION E10

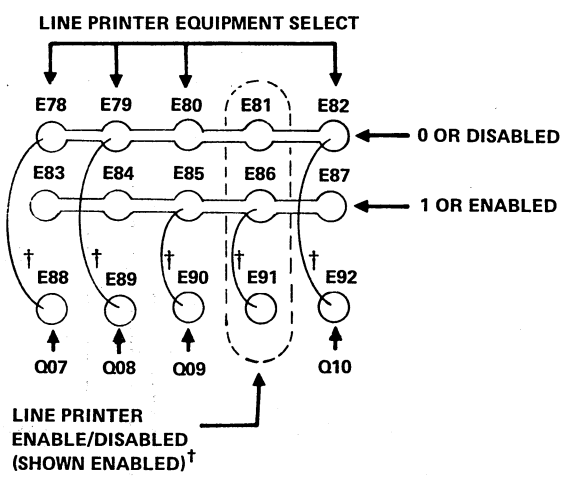

Figure 8-6. Card Reader/Line Printer Controller Equipment Jumpers

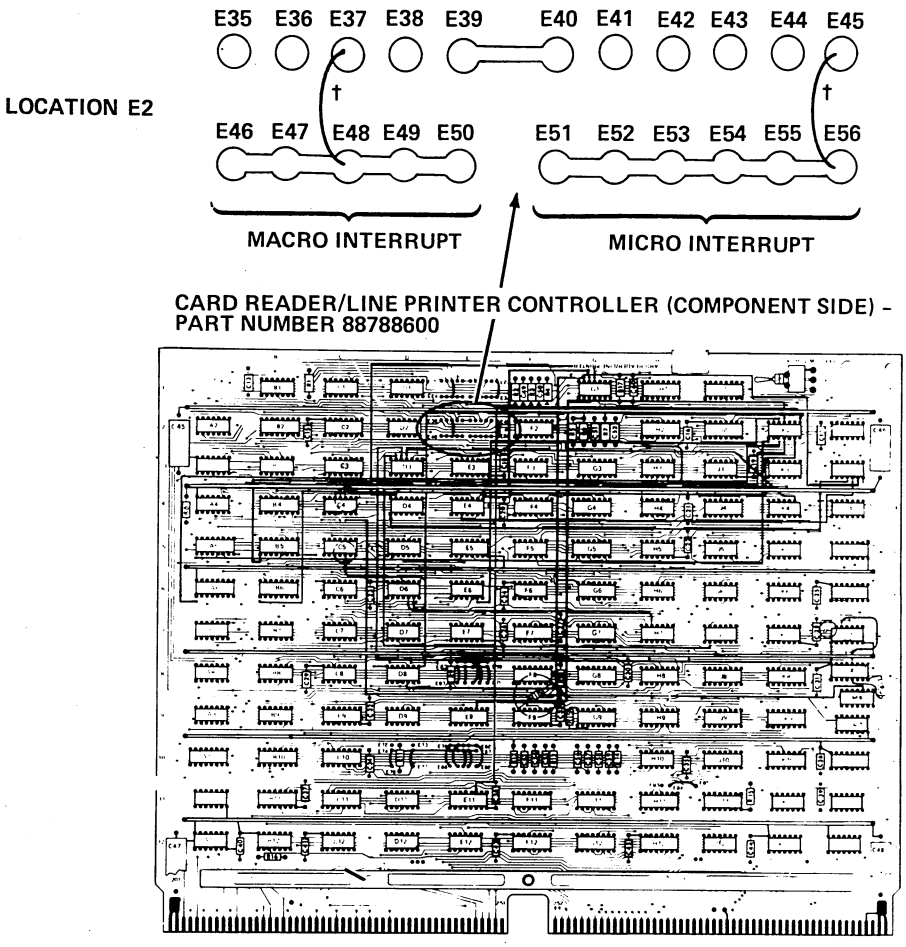

LINE PRINTER MACRO INTERRUPT CONFIGURATIONS (LOCATION E2)

OPTION	JUMPER ONLY
NO MACRO INTERRUPTS	E39 TO E50
ENABLE ALL MACRO INTERRUPTS	E37 TO E48†
INTERRUPT ONLY ON:	
DATA AVAILABLE	E35 TO E46
END OF OPERATION	E36 TO E47
ALARM	E38 TO E49

LINE PRINTER MICRO INTERRUPT CONFIGURATIONS (LOCATION E2)

OPTION	JUMPER ONLY
NO MICRO INTERRUPTS	E40 TO E51
AUTO-DATA TRANSFER	E45 TO E56†
ENABLE ALL OF THE BELOW	E42 TO E53
INTERRUPT ONLY ON:	
DATA AVAILABLE	E44 TO E55
END OF OPERATION	E43 TO E54
ALARM	E41 TO E52

†NORMAL SYSTEM CONFIGURATION

0976

Figure 8-7. Card Reader/Line Printer Controller Interrupt Jumpers

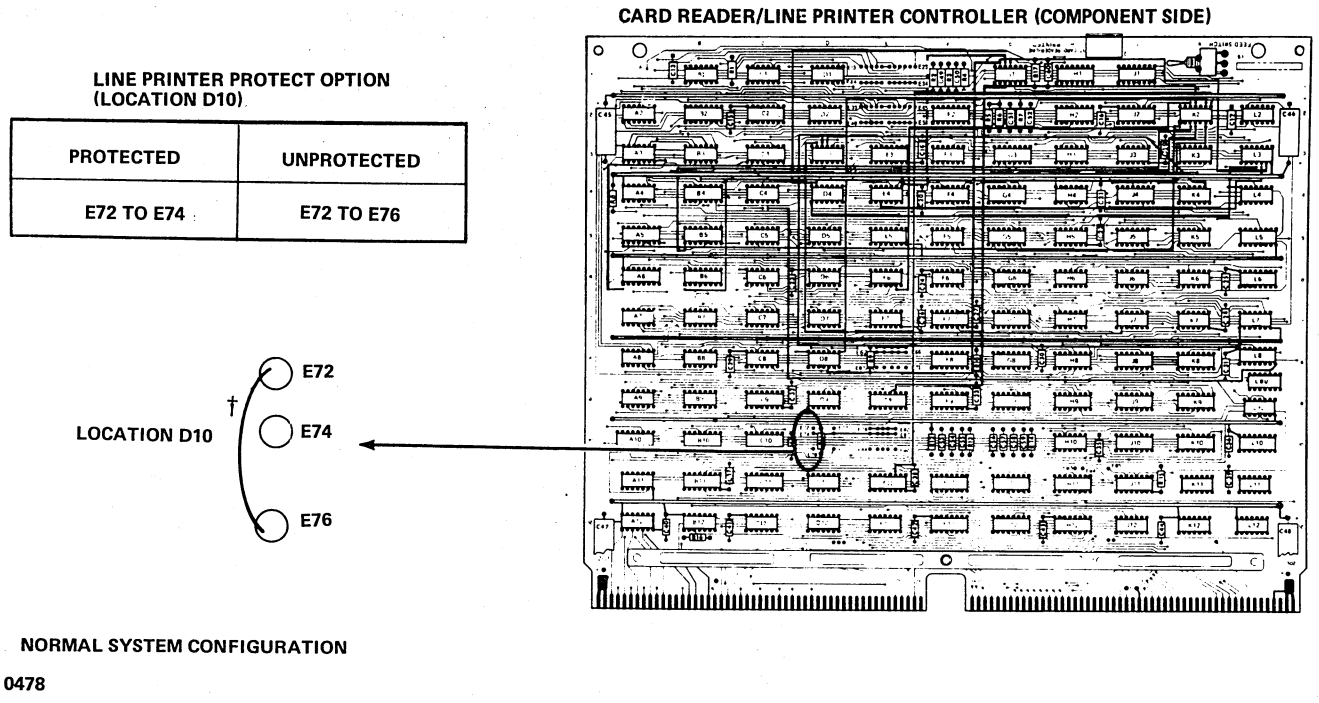

Figure 8-8. Card Reader/Line Printer Controller Protect Jumpers

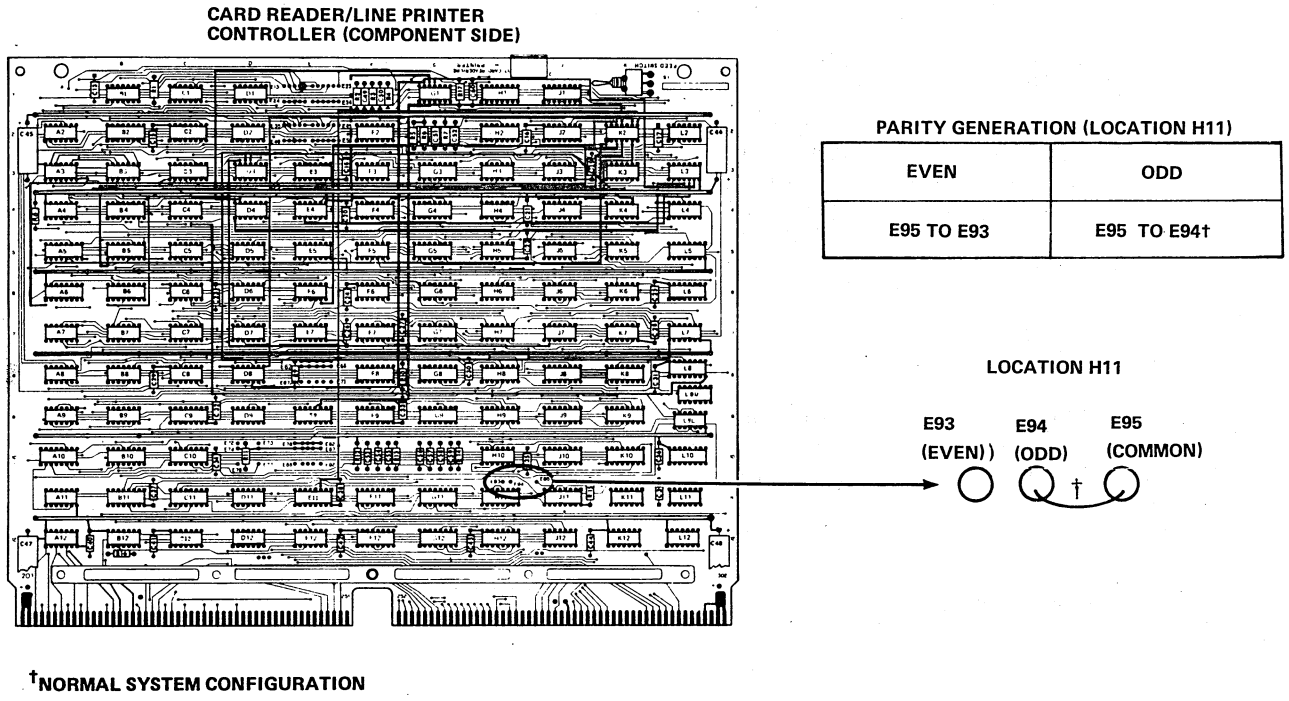

Figure 8-9. Card Reader/Line Printer Controller Parity Jumpers

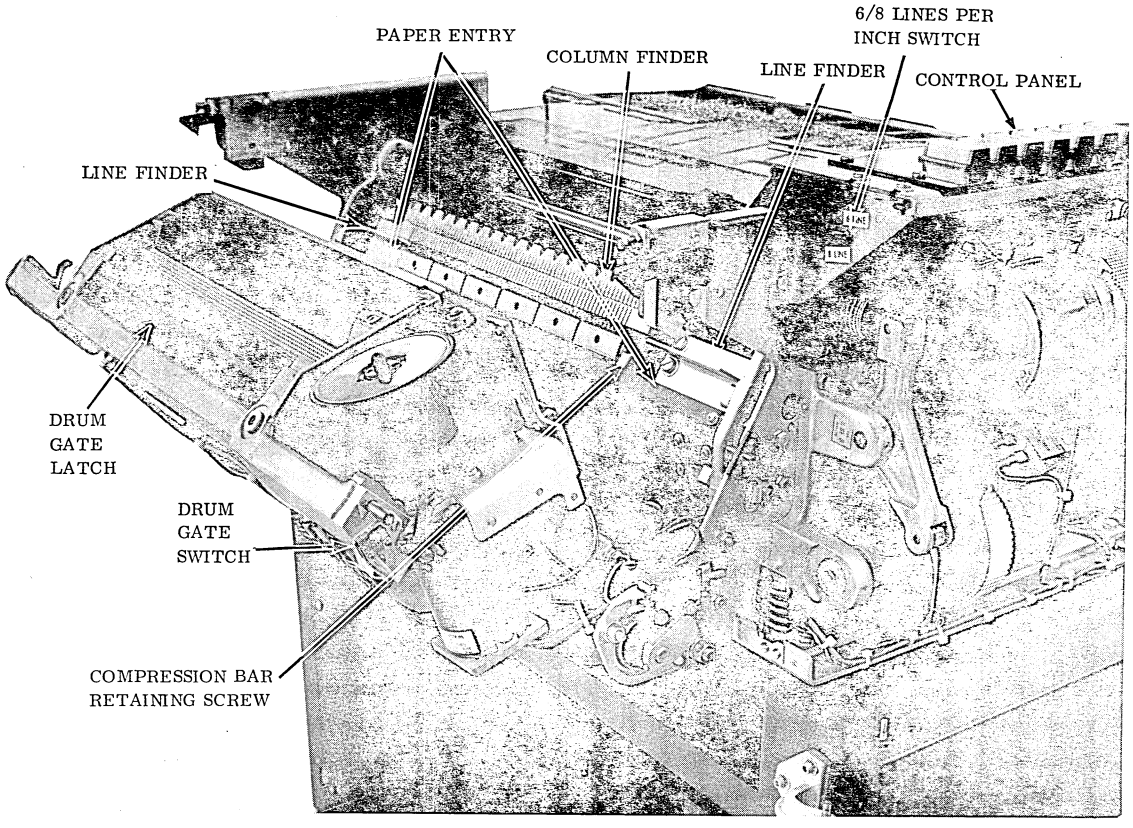

FRONT VIEW (RIGHT CORNER)

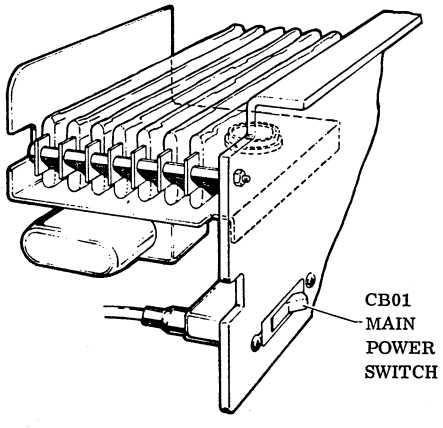

REAR VIEW (RIGHT CORNER)

Figure 8-10. Drum Gate Assembly

The normal operating switch setting is to six lines per inch using format tape (part number 44713801).

The line-per-inch switch location is illustrated in figure 8-10. The format paper tape location is illustrated in figure 8-11.

FORM FORMATTING OPTIONS

A jumper between 1TB11-3 and 1TB11-4 places the printer in the preprint mode. A jumper between 1TB11-5 and 1TB11-6 installs the auto perf skip option.

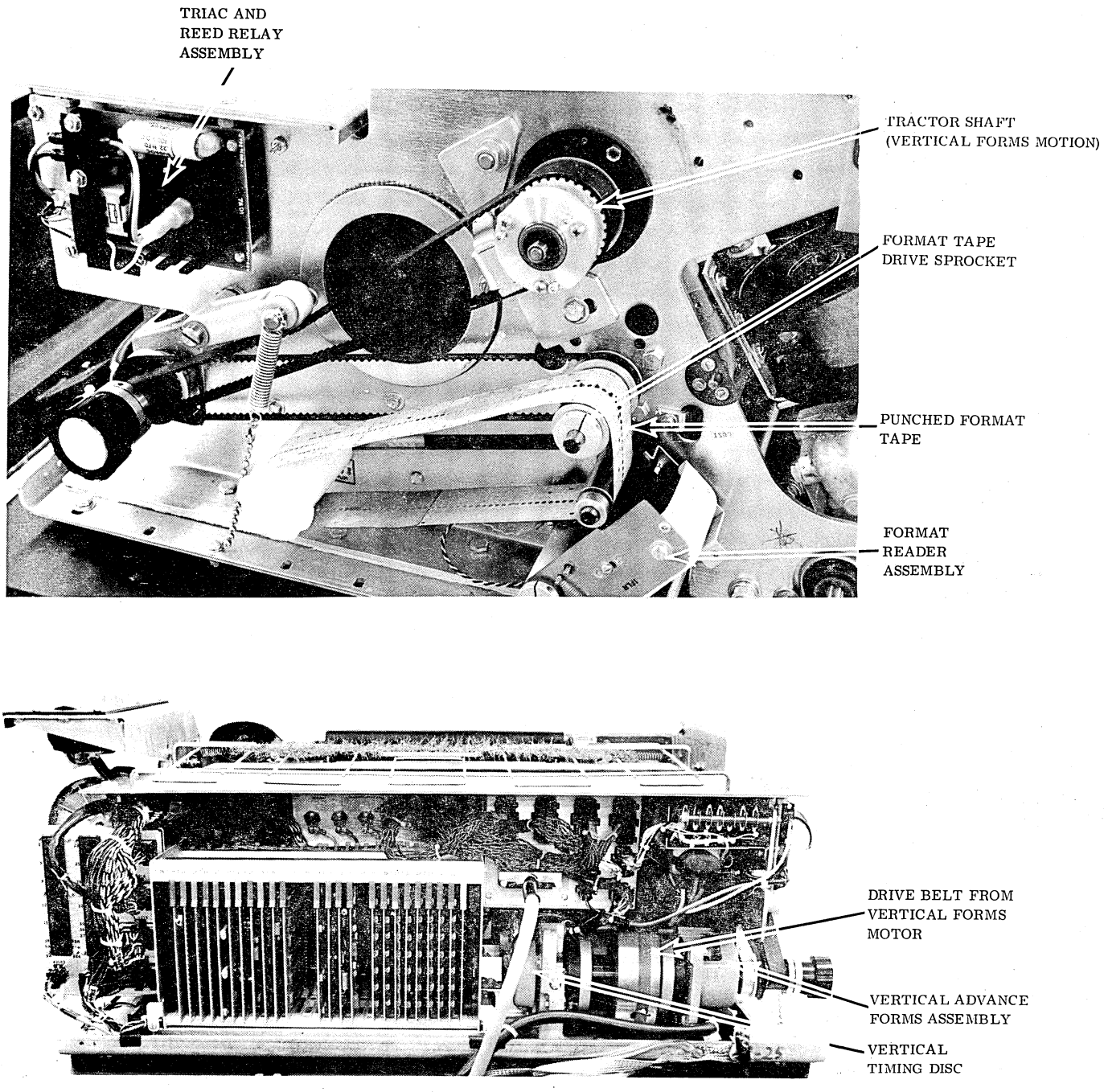

Figure 8-11. Vertical Forms Drive Assembly

PRINTER CIRCUIT BOARD SWITCHES

Verify that the switches on printer PWA 7PC1 are set as listed in table 8-1 and that the switches on PWA 7PC6 are set as listed in table 8-2.

NOTE

The switches may be marked ON/OFF or OPEN/CLOSED. ON is the same as CLOSED; OFF is the same as OPEN.

TABLE 8-1. 7PC1 SWITCH SETTINGS

Switch No.	On	Off
SWN1-1		X
SWN1-2	X	
SWN1-3		X

TABLE 8-2. 7PC6 SWITCH SETTINGS

Switch No.	On	Off
SWN1-1		X
SWN1-2		X
SWN1-3		X
SWN1-4		X
SWN1-5	X	
SWN1-6		X
SWN1-7		X
SWN1-8	X	

FORMAT TAPE PREPARATION

Format tapes are prepared from CDC format tape (part number 44713800) or a suitable equivalent. Holes are located on the tape by using CDC tape punch (part number 44870300) or to tolerances shown in figure 8-12. Holes

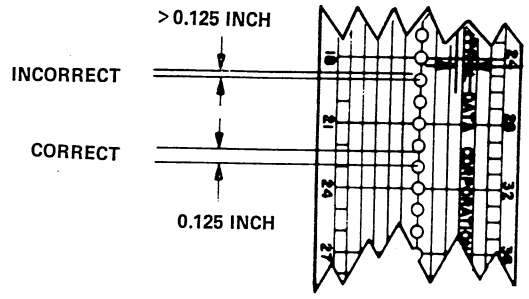

Figure 8-12. Format Tape Hole Tolerances

may be punched at either six or eight lines per inch. They must be located in line with the reference marks on the format tape as shown in figure 8-13.

NOTE

Every third six-line-per-inch position on the tape is aligned with an eight-line-per-inch position. This is referred to as the coincident line.

The minimum space permitted between the center lines of holes is 1/8 inch. This is especially important if some channels on the tape are punched at eight lines per inch while others are punched at six lines per inch and it is necessary to change from an eight-line-per-inch channel to a six-line-per-inch channel. (One-eighth inch corresponds to the minimum forms advance.)

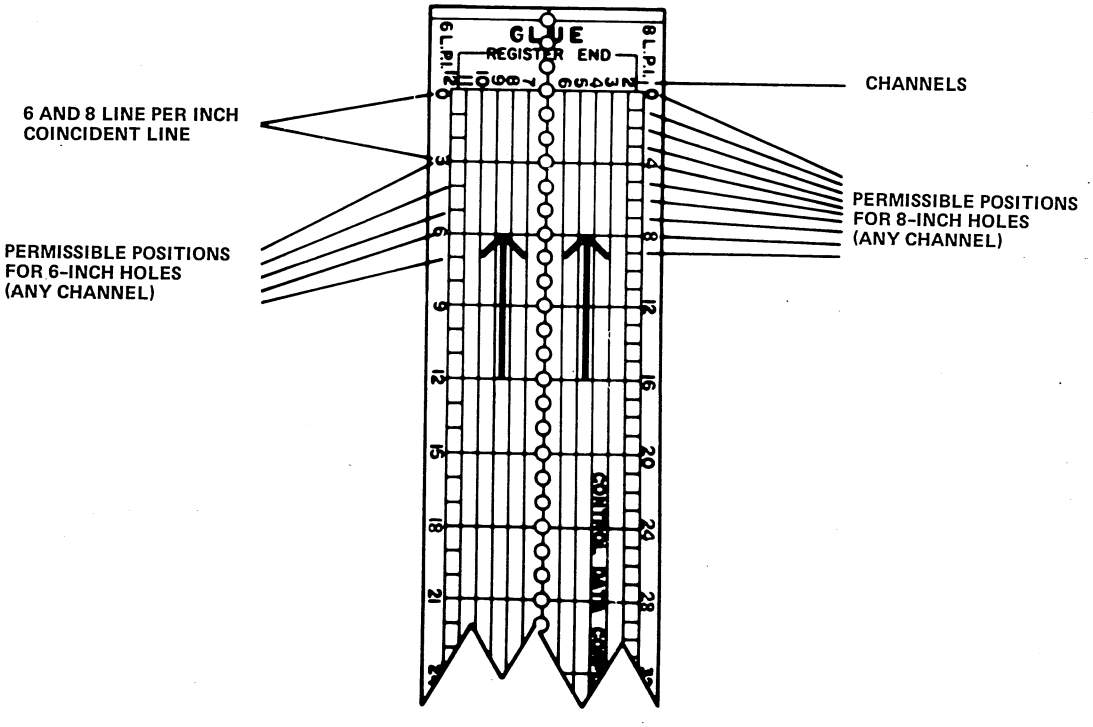

Figure 8-13. Format Tape Reference Marks

Figure 8-14 illustrates an example of format tape levels.

Tape must be spliced so that its loop length is exactly equal to the form length, or an even multiple of it, independently of whether it is punched at six or eight lines per inch.

The loop must be spliced as follows:

1. Apply a thin even coat of Fast Tack Adhesive where indicated on the format tape and also to the corresponding underside of the other end of the tape (figure 8-15). Allow the adhesive to dry until tacky.
2. Press the surfaces together.
3. Clean excess adhesive off the format tape with Chlorothene-Nu solvent.

FORMAT TAPE INSTALLATION

Install the format tape as follows:

1. Turn off ac power to the line printer.
2. Remove the paper guide grill at the rear of the printer.
3. Swing the printer's top panel cover open.
4. Unlatch the format reader by pressing down on the latch (figure 8-16).
5. Turn the tension roller counterclockwise to release it.
6. Remove the old format tape if present.
7. The tape is marked channels 1 through 12. Position the new format tape on the drive sprocket so that channel 1 of the tape is on the inside toward the chassis.
8. Install the new format tape on the drive sprocket so that the red coincidence dot on the sprocket is aligned with a coincidence line on the format tape (figure 8-16).
9. Loop the format tape around the contact roller and the tension roller.
10. Slide the tension roller toward the rear of the printer until the slack is removed from the format tape (allow a slight play). Tighten the tension roller by turning the knob clockwise.
11. Close the format reader by raising the reader back to the contact roller until it is latched.

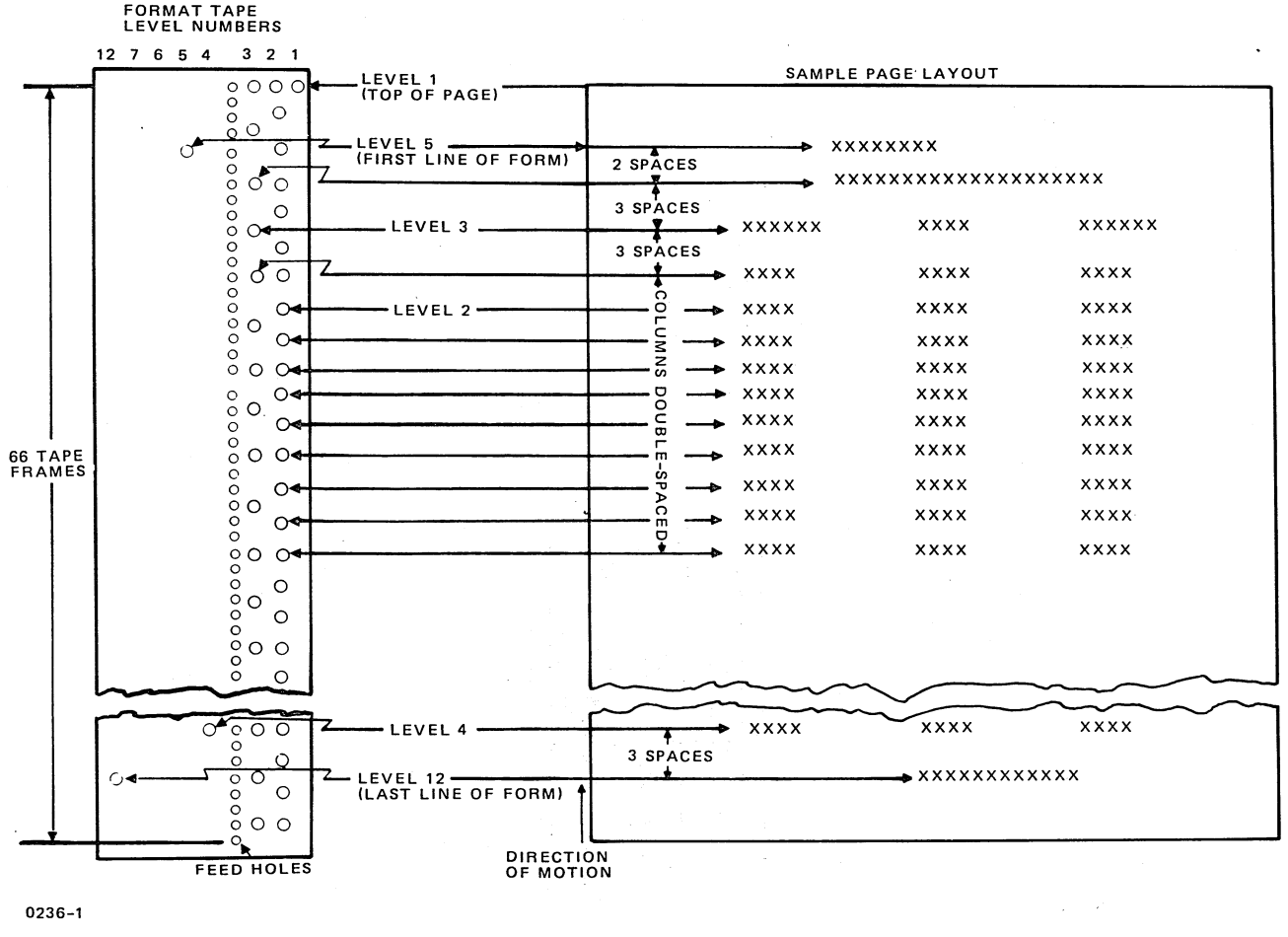

Figure 8-14. Format Tape Levels

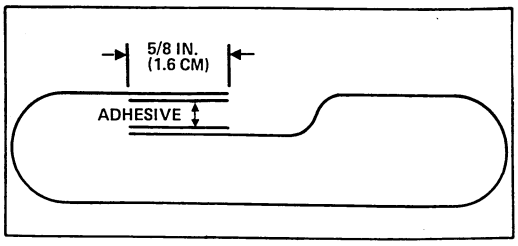

Figure 8-15. Format Tape Splicing

RIBBON INSTALLATION

Install the ribbon as follows:

1. Open the front panel door of the line printer. Swing the drum gate assembly forward by depressing the gate latch.
2. Move the right-handed edge of the Mylar shield away from the drum until it locks open (figure 8-17).
3. Remove the old ribbon spools, if any, by lifting the spools upward. Depress the gate latch to remove the left spool.
4. Clean the ink deposits from the ribbon guide posts using a solvent and a clean cloth or paper toweling.
5. Place one of the new ribbon spools on the left-hand spindle so that ribbon is playing off the inside of the spool (figure 8-17).
6. Route the ribbon around the left-hand guide post and between the Mylar shield and the drum assembly.
7. Route the ribbon around the right-hand guide post and install the second ribbon spool on the right-hand spindle (as shown in figure 8-17).
8. Turn the right-hand spool counterclockwise until all slack is removed from the ribbon.
9. Make sure the ribbon is centered on the guide posts and the ribbon spools are locked on the ribbon spool shafts.
10. Close the Mylar shield assembly.
11. Return the gate drum assembly to its latched position by pushing the assembly forward.

FORMS INSTALLATION AND ALIGNMENT

Perform the following steps:

1. Open the line printer front access door.
2. Place the line printer paper inside the printer, directly below the print stations.
3. Turn on power to the printer.
4. Depress the PAGE EJECT switch. This sets the tractors to the first line of the print position and horizontally aligns the tractor shaft to the column finder scale.
5. Raise the access window and open the drum gate. Then route the forms between the drum gate and the print mechanisms (figure 8-10).
6. Open the left- and right-hand tractor flaps and install the forms. Then position the tractor so that column 1 on the column finder is aligned to the desired position of print column 1 on the forms and so that line 1 of the print forms is aligned with the line finders shown in figure 8-10.
7. Paper tension is applied by a slight outward force exerted on the paper by the tractor sprockets. This tension is important for proper feeding of the paper.

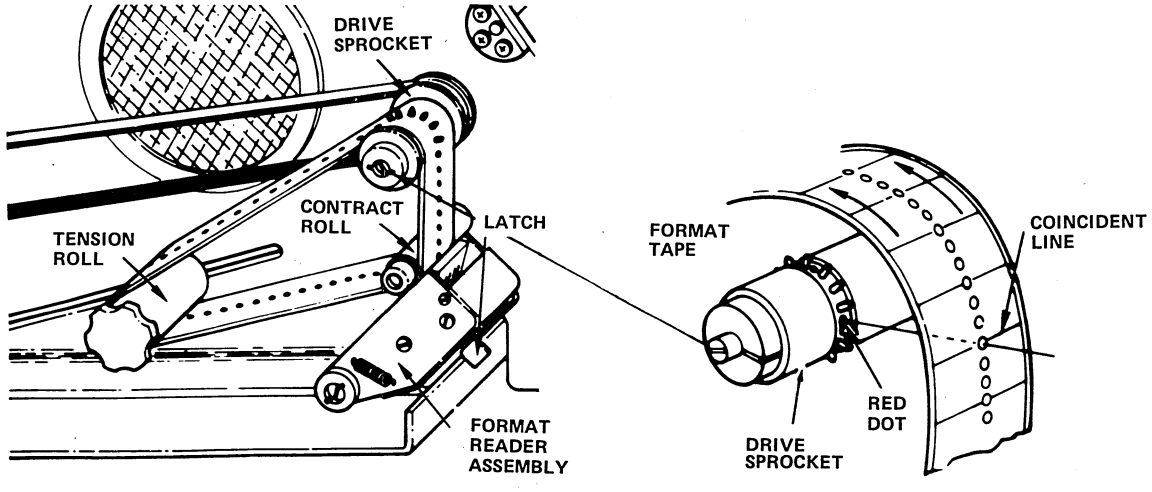

Figure 8-16. Format Tape Installation

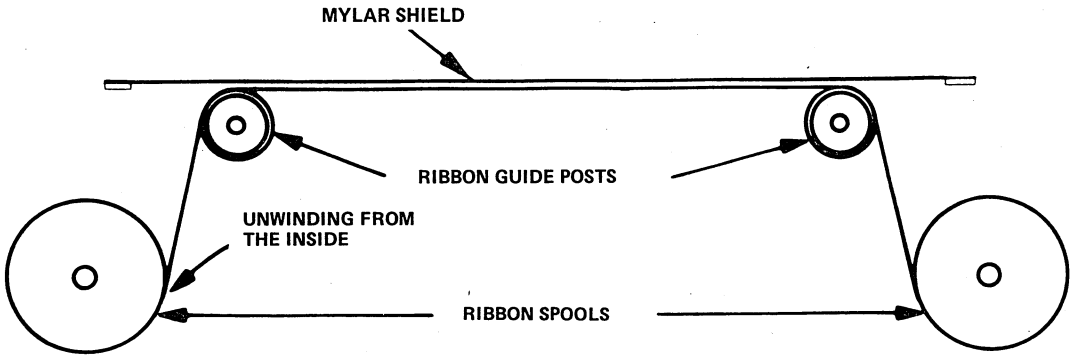

Figure 8-17. Ribbon Installation

8. Make the printer perform two top-of-forms functions by depressing the PAGE EJECT switch on the control panel twice. This allows enough form leader so that the forms can be routed out the rear of the printer.

9. Close the drum gate and depress the PAGE EJECT switch again. Check that the feed holes of the form are not torn. If they are, the forms paper stack below the print drum should be repositioned or the paper tension exerted by the tractor sprockets should be reduced. Turn the locking horizontal positioning control knob in the direction of the arrow and hold it while positioning the tractor assembly (figure 8-18).

10. Close the access window and the front access door.

11. The forms are now ready for printing.

DIAGNOSTIC TESTING

Perform the manual operating and diagnostic checks according to the diagnostic decision logic tables in the system hardware maintenance manual, volume 2.

NOTE

The diagnostic tests and routines described in the system hardware maintenance manual can only be performed after the console display, processor, and flexible disk drive or tape cassette (diagnostic load device) installations are complete.

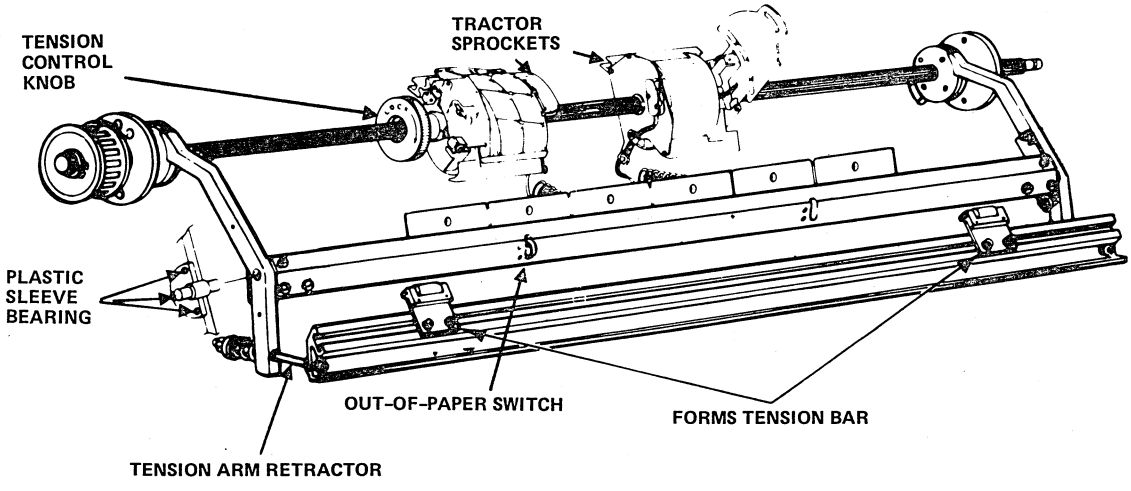

Figure 8-18. Print Forms Positioning

MAGNETIC TAPE TRANSPORT

The NRZI magnetic tape transport subsystem consists of a one-board controller, a single translator board, and up to four magnetic tape transports. The magnetic tape controller plugs directly into the processor chassis and backplane. Power for the controller is obtained from the backplane and does not require a special power supply. The transport and transport power are installed in a vertical equipment cabinet with the translator board mounted atop the transport power supply.

NOTE

This section deals with NRZI magnetic tape transport subsystems only. PE magnetic tape transport subsystems are covered in another section of this manual.

The controller handles from one to four magnetic tape transports on a daisy-chain configuration. The following two model types may be intermixed on the daisy chain.

- Magnetic tape transport, NRZI, seven-track, 25 inches per second, 556/800 density
- Magnetic tape transport, dual mode, nine-track, 25 inches per second, 800 density

See figure 9-1 for a block diagram of the magnetic tape subsystem.

The following terminology is used in this section:

- Magnetic tape transport subsystem - This consists of the magnetic tape controller, the magnetic tape transport unit, the cable interface assembly, and an equipment cabinet.
- Magnetic tape transport unit - This consists of either a seven-track or nine-track magnetic tape transport drive and translator board.
- Magnetic tape transport drive - This consists of either the seven-track or nine-track transport drive system without a translator board. The magnetic tape transport drive is cable-interconnected with a magnetic tape transport unit and shares common usage of its translator board.

PARTS AND EQUIPMENT

Parts and Equipment	Equipment Number	Part Number
Magnetic tape transport (seven-track)	BW101-A	83803020
or		
Magnetic tape transport (nine-track)	BW303-A	83804209

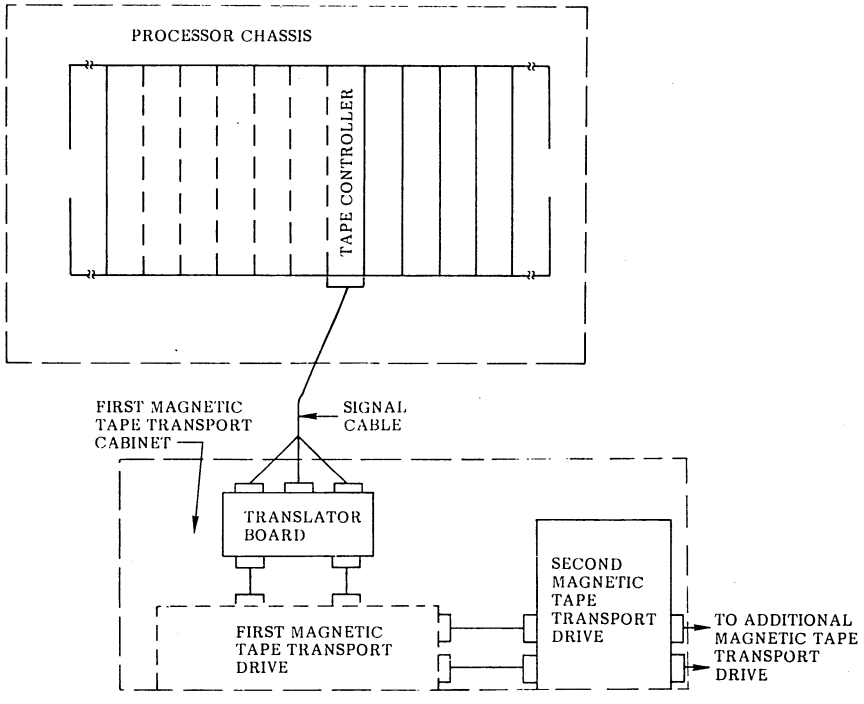

Figure 9-1. Magnetic Tape Transport Subsystem Block Diagram

Parts and Equipment	Equipment Number	Part Number
Magnetic tape NRZI controller - Includes cable to translator	FA107-A or FA107-B	88918500 96721466
Cable assembly - Included with controller (controller to translator)	--	96753942 or 96721475
Magnetic tape installation kit (upper)	YA135-A	96744493
Magnetic tape installation kit (lower)	YA136-A	96744496
Equipment cabinet - Includes power distribution box and power cord	XA123-C or XA123-D	96743967 96721666
Translator board	BW812-A	86674301
Cable assembly 20 feet (6.1 meters) - Included with translator board (translator to first magnetic tape transport drive)	--	96790100
Single tape drive cabinet assembly - Includes power distribution system, installation kit, and medium length front door	GH447-B or GH447-E	96750233 96730485
Dual tape drive cabinet assembly - Includes power distribution system, two installation kits, and one short length front door	GH447-C or GH447-F	96750237 96730488

NOTE

The magnetic tape transport equipment may be shipped in various configurations and quantities, depending on system requirements.

One or two magnetic tape transport drives may be installed in a cabinet. Figure 9-2 illustrates a maximum configuration system.

TEST EQUIPMENT

A scratch tape is required to install the magnetic tape transport and controller.

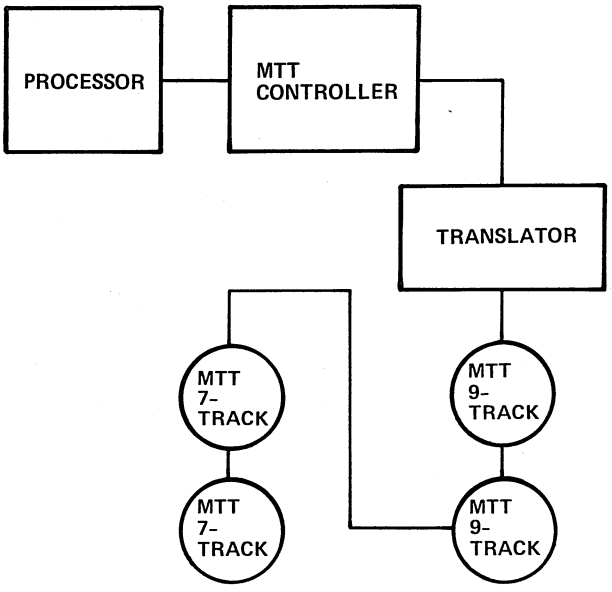

NOTES:
1. COMBINATIONS OF SEVEN-TRACK AND NINE-TRACK UNITS MAY BE USED AS LONG AS THE TOTAL NUMBER OF UNITS DOES NOT EXCEED FOUR.
2. UNIT NUMBERS MAY BE ARBITRARILY ASSIGNED TO ANY MAGNETIC TAPE TRANSPORT UNIT AS LONG AS EACH DRIVE HAS A UNIQUE NUMBER.

0193

Figure 9-2. Magnetic Tape Transport System Maximum Configuration

UNCRATING

Cabinets shipped with the magnetic tape transport already installed are uncrated as follows:

1. Cut the steel banding and remove the plywood top and cushioning pad (figures 9-3 and 9-4).
2. Cut the fiber strapping that secures the outer corrugated covering.
3. Remove the corrugated covering, cushioning material, and plastic dust cover (figure 9-4).
4. Using two roller lifts, insert the forks at the front and rear of the cabinet.
5. Carefully lift the cabinet off the skid and remove the skid.
6. While the cabinet is on the roller lifts, position the cabinet at its intended installation location.
7. Remove the banding and tape surrounding the cabinet front and rear access doors.

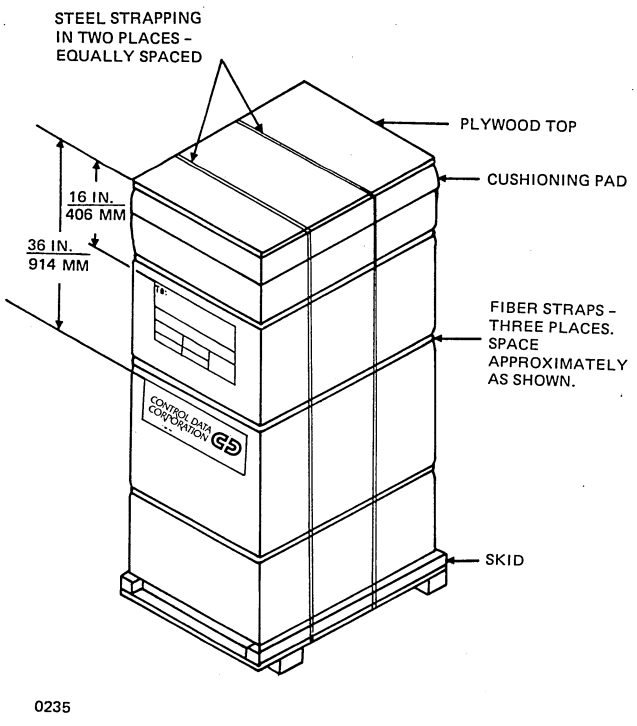

Figure 9-3. Magnetic Tape Transport and Cabinet Crating Diagram

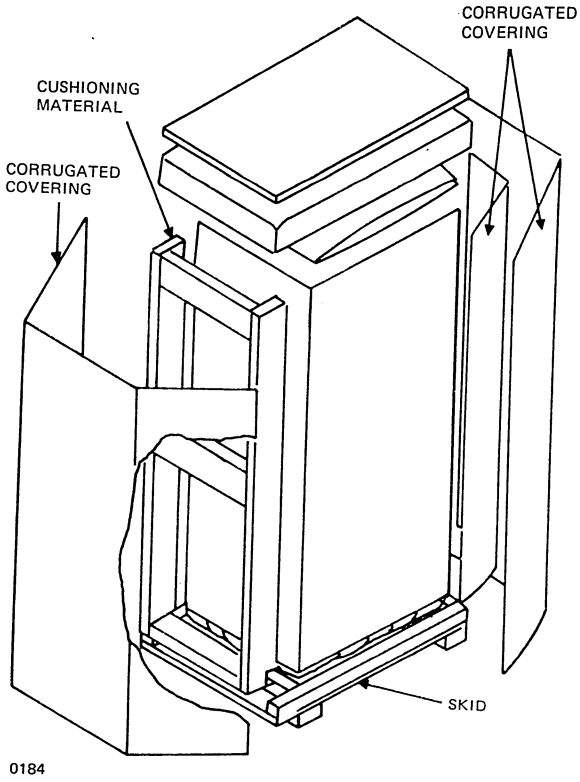

Figure 9-4. Magnetic Tape Transport and Cabinet Uncrating Diagram

8. Open the cabinet doors and magnetic tape transport cover door. Remove all wood block supports and cushioning material.

CRATING

The equipment should be crated by reversing the order of uncrating.

POWER REQUIREMENTS

See section 1 for the magnetic tape transport input power requirements.

The magnetic tape subsystem is designed to operate from a power source with a nominal input of 120 V ac, single phase, 50/60 Hz. For site voltages other than this value, a power conversion transformer is required. Refer to the applicable section of this manual for installing the power conversion transformer.

POWER CABLING

See figure 9-5 for details on connecting the input power cord of the magnetic tape transport. Compare the unit name plate power ratings with the available site power source.

SIGNAL CABLING

Figure 9-5 illustrates the connection of the interface cable assembly between the magnetic tape transport unit and the magnetic tape controller (see section 1 for the backplane slot assignment). If a nine-track and a seven-track magnetic tape transport are used in a system, the first unit (MTT 1) must be the nine-track unit. See figure 9-2.

If only one magnetic tape transport unit is used, the cable assembly normally connecting to the second unit (MTT 2) is coiled and stored in the MTT 1 cabinet. The cable length is 15 feet (4.6 meters) from the controller to the translator.

Figures 9-6 and 9-7 illustrate how to connect the interface cables between the magnetic tape transport drive systems.

Ground the cable shield as follows:

1. Connect the signal cable to the backplane of the processor and to the translator board (figure 9-5).

2. Ground the cable shield to the processor cabinet as illustrated in figure 9-5. More than one cable can be grounded by a single U-bolt.

3. Ground the cable shield to the magnetic tape transport cabinet as shown in figure 9-5.

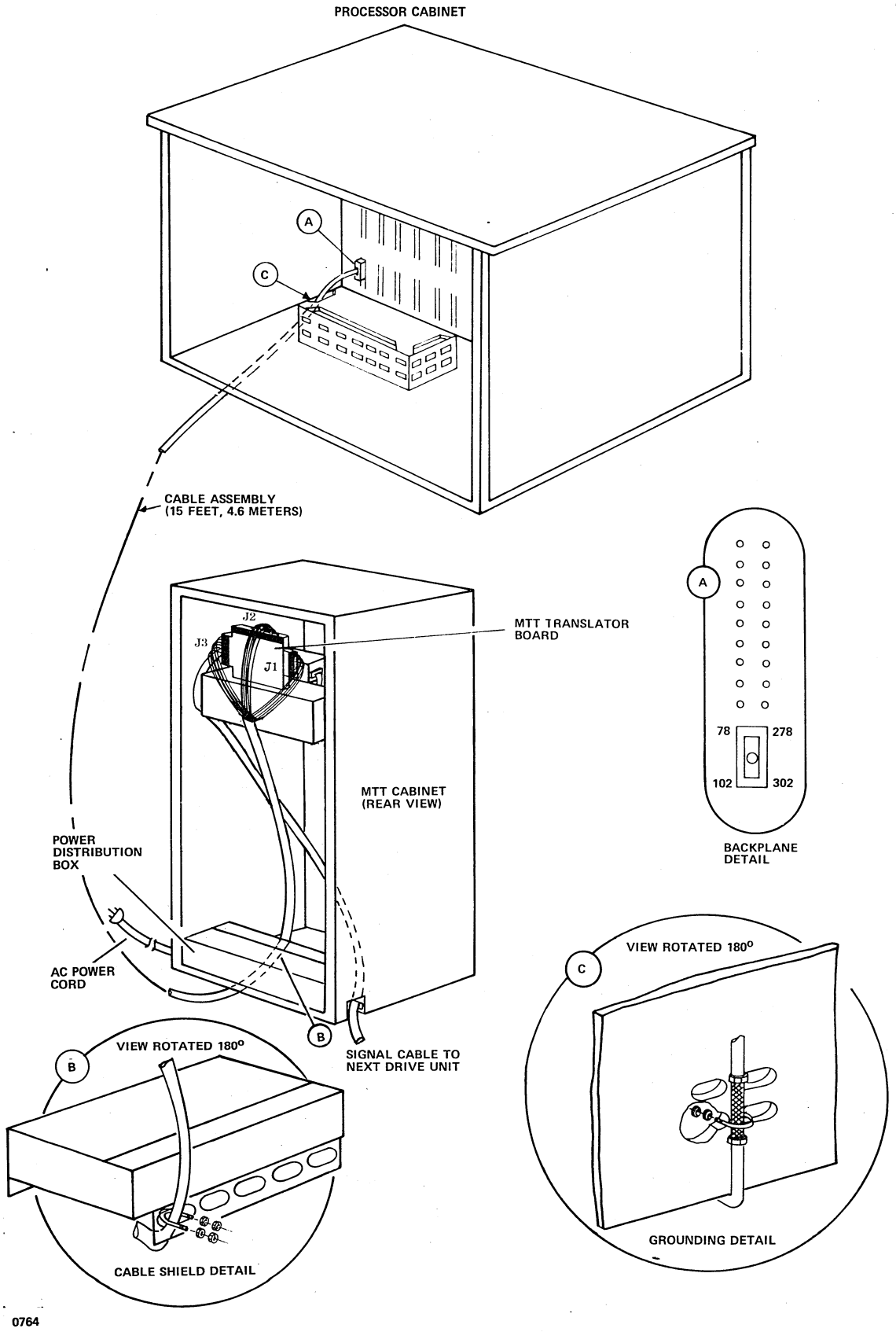

Figure 9-5. CYBER 18 Magnetic Tape Transport Signal and Power Cable Connection

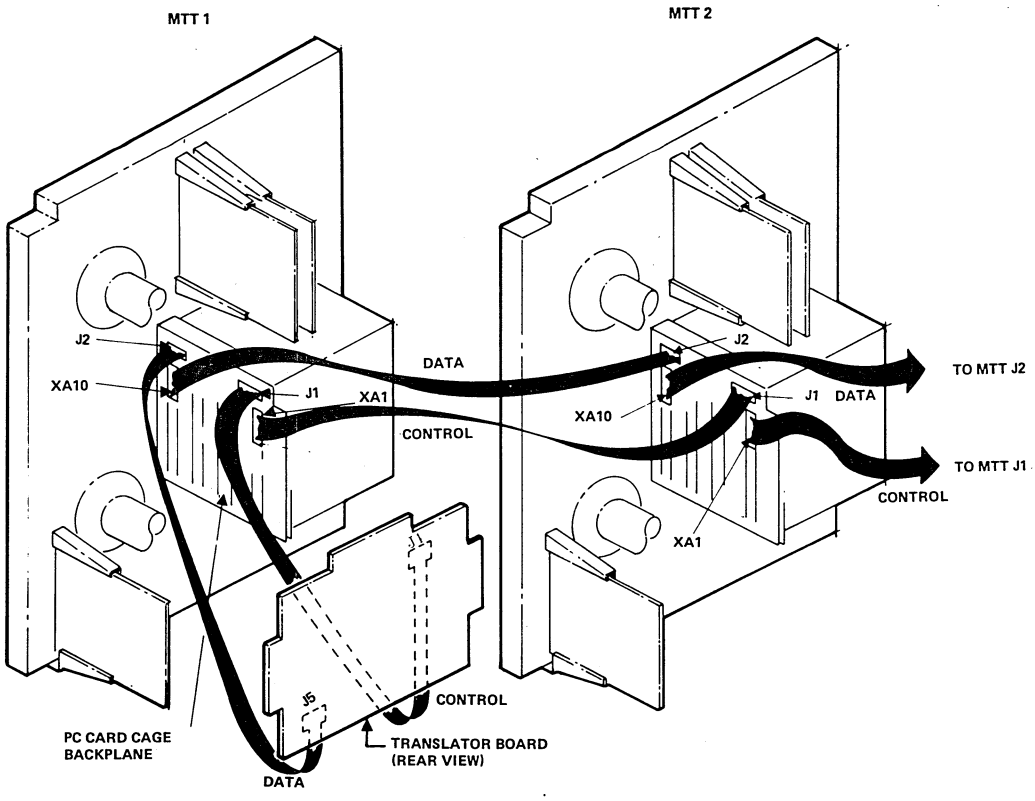

Figure 9-6. MTT-to-MTT Signal Cable Connections (Seven Track NRZI Mode)

Magnetic Tape Transport

Figure 9-8 illustrates the location and normal operating configuration of the magnetic tape transport select jumper. When more than one magnetic tape transport is used in a system, each unit must be jumpered for a different unit select number. When only one magnetic tape transport is used in a system, it is jumpered as illustrated in figure 9-8 for unit 0. The stop jumper is normally installed on all units. Verify that this jumper is installed at its location between XA4B14 and XA4B15.

Magnetic Tape Controller

The equipment and interrupt jumpers are wire-wrap interconnections at the processor chassis backplane between the magnetic tape controller and the computer system (see table 9-1). These are special wires normally installed at the factory when a tape controller is provided. In the case of add-on equipment, these wires must be added in the field.

DIAGNOSTIC TESTING

Perform the manual operating and diagnostic checks according to the diagnostic decision logic tables in the subsystem hardware maintenance manual.

NOTE

The diagnostic tests and routines described in the subsystem hardware maintenance manual can only be performed after the console display, processor, and flexible disk drive or tape cassette (diagnostic load device) installations are complete.

MAGNETIC TAPE TRANSPORT DRIVE

The magnetic tape transport drives (seven- or nine-track) are installed in a equipment cabinet and require two men to perform installation procedures. One or two magnetic tape transport drives can be installed in a single cabinet. If only one drive is being installed, the installation kit provides hardware to facilitate assembly in the top half of the cabinet. Installation of the magnetic tape transport subsystem is discussed under Magnetic Tape Transport above. After installing the magnetic tape transport drives into the equipment cabinet, refer to Magnetic Tape Transport above for installation of the complete magnetic tape transport subsystem.

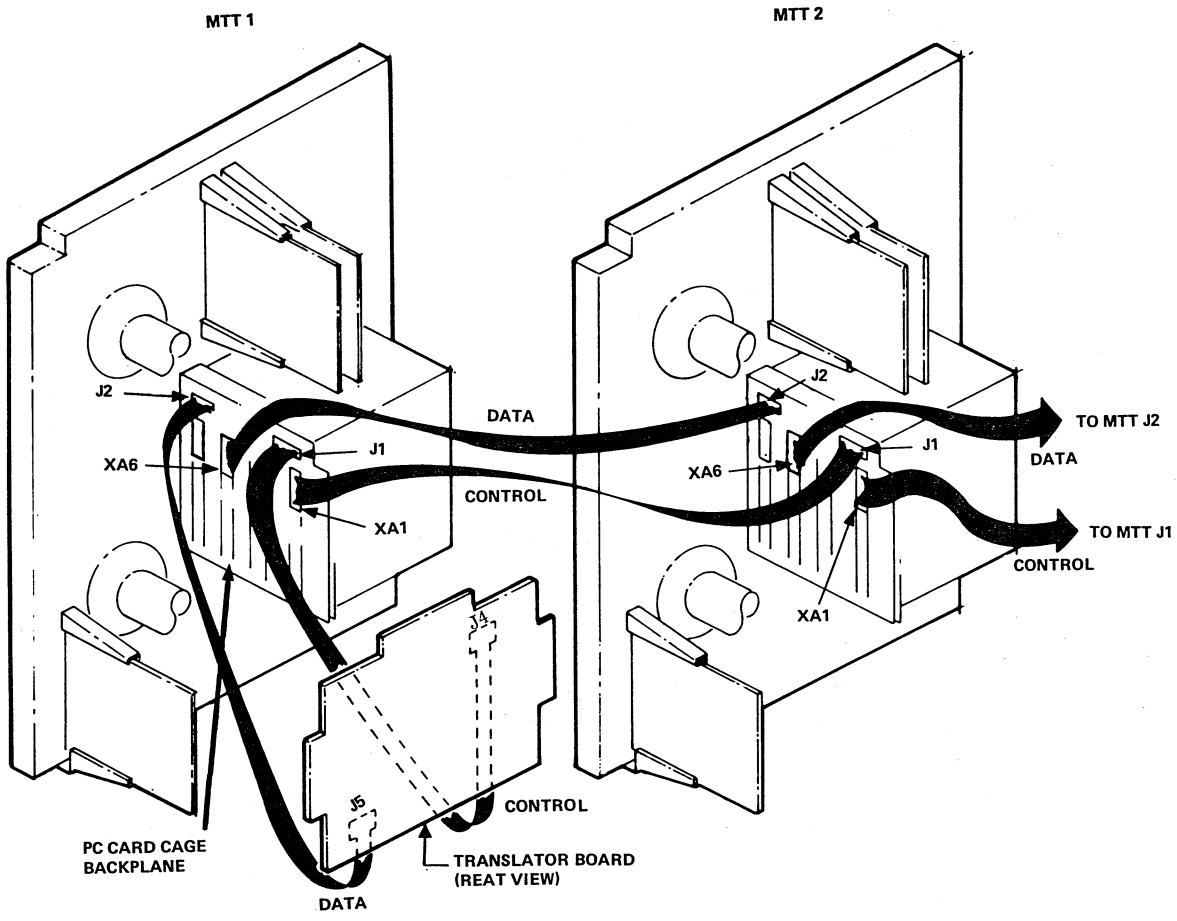

Figure 9-7. MTT-to-MTT Signal Connections

PARTS AND EQUIPMENT

Parts and Equipment	Equipment Number	Part Number
Magnetic tape transport (seven-track)	BW101-A	83803020
Magnetic tape transport (nine-track)	BW303-A	83804209
Magnetic tape installation kit (upper)	YA135-A	96744493
Magnetic tape installation kit (lower)	YA136-A	96744496
Equipment cabinet - Includes power distribution system and temperature-sensing options	XA123-C or XA123-D	96743967 96721666
Single tape drive cabinet assembly - Includes power distribution system installation kit, and medium length front door	GH447-B or GH447-E	96750233 or 96730485
Dual tape drive cabinet assembly - Includes power distribution system, two installation kits, and short length front door	GH447-C or GH447-F	96750237 or 96730488

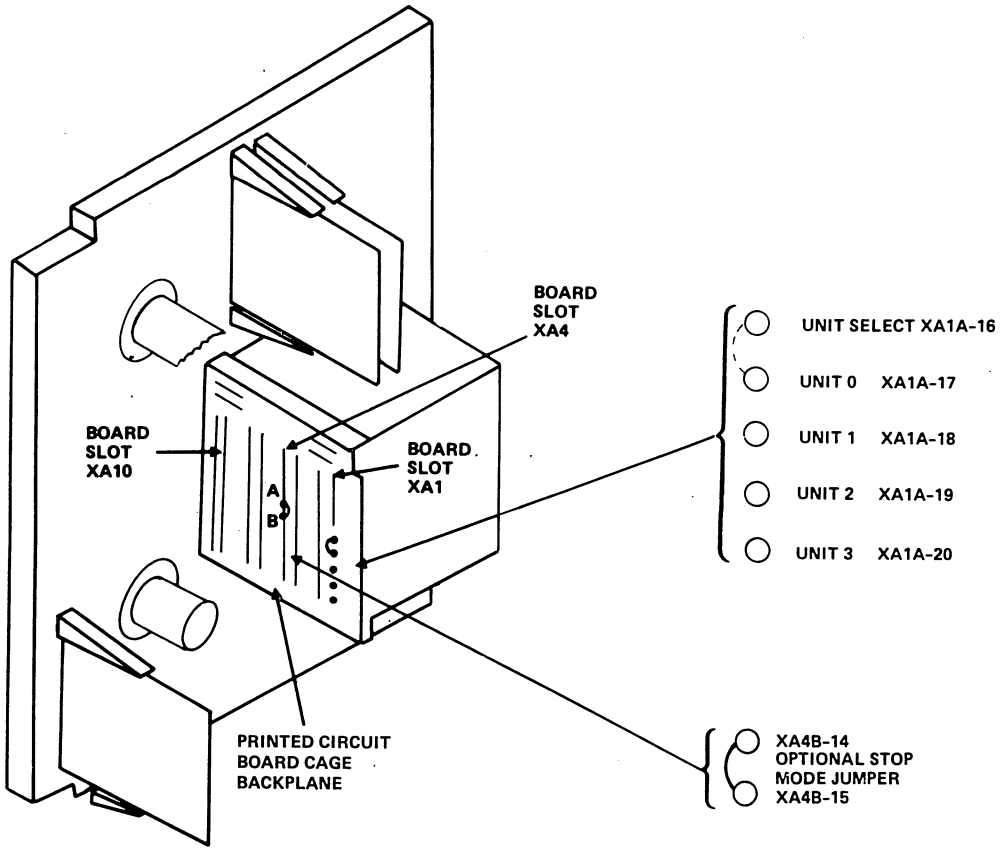

NOTE: TO SELECT A UNIT OTHER THAN 0, PLACE THE JUMPER BETWEEN UNIT SELECT AND THE DESIRED UNIT NUMBER.
VERIFY THAT THE STOP MODE JUMPER IS INSTALLED FROM XA4B-14 TO XA4B-15.

0933-2

Figure 9-8. Magnetic Tape Transport Unit Select and Stop Mode Jumper

TABLE 9-1. ADDRESS AND INTERRUPT LINES

SPT/ Port Address Wiring				SSEL/ Select Line Wiring			
From Slot A		To Slot K		From Slot A		To Slot K	
Name	Pin	Name	Pin	Name	Pin	Name	Pin
SPT/	A227	SPT0/	K-99	SSEL/	A251	SSEL0/	K-293
SPT/	A227	SPT1/†	K-98	SSEL/	A251	SSEL1/†	K-294
SPT/	A227	SPT2/	K-97	SSEL/	A251	SSEL2/	K-295
SPT/	A227	SPT3/	K-96	SSEL/	A251	SSEL3/	K-290
SPT/	A227	SPT4/	K-94	SSEL/	A251	SSEL4/	K-296
SPT/	A227	SPT5/	K-93	SSEL/	A251	SSEL5/	K-297
SPT/	A227	SPT6/	K-95	SSEL/	A251	SSEL6/	K-298
SPT/	A227	SPT7/	K-92	SSEL/	A251	SSEL7/	K-299

†Standard system configuration

TABLE 9-1. ADDRESS AND INTERRUPT LINES (Contd)

RPINT/ Program Interrupt Wiring				RDINT/ Data Interrupt Wiring			
From Slot A		To Slot L		From Slot A		To Slot L	
Name	Pin	Name	Pin	Name	Pin	Name	Pin
RPINT/	A249	INT16/	L-69	RDINT/	A250	INT00/	L-227
RPINT/	A249	INT17/	L-269	RDINT/	A250	INT01/	L-27
RPINT/	A249	INT18/	L-270	RDINT/	A250	INT02/	L-32
RPINT/	A249	INT19/	L-70	RDINT/	A250	INT03/	L-232
RPINT/	A249	INT20/	L-72	RDINT/	A250	INT04/	L-28
RPINT/	A249	INT21/	L-272	RDINT/	A250	INT05/	L-31
RPINT/	A249	INT22/	L-271	RDINT/	A250	INT06/	L-231
RPINT/	A249	INT23/	L-71	RDINT/	A250	INT07/	L-228
RPINT/	A249	INT24/	L-73	RDINT/	A250	INT08/	L-30
RPINT/	A249	INT25/ †	L-274	RDINT/	A250	INT09/ †	L-230
RPINT/	A249	INT26/	L-74	RDINT/	A250	INT10/	L-229
RPINT/	A249	INT27/	L-273	RDINT/	A250	INT11/	L-29
RPINT/	A249	INT28/	L-277	RDINT/	A250	INT12/	L-33
RPINT/	A249	INT29/	L-276	RDINT/	A250	INT13/	L-226
RPINT/	A249	INT30/	L-77	RDINT/	A250	INT14/	L-233
RPINT/	A249	INT31/	L-275	RDINT/	A250	INT15/	L-234

† Standard system configuration

TOOLS REQUIRED

One each of the following list of tools is required to perform the installation.

- Drill motor, 1/4 horsepower, 1/4-inch chuck
- Drill, high-speed no. 43
- Drill, high-speed no. 36
- Tap, centering 4-40
- Tap, centering 6-32
- Tap wrench
- Spin wrench, 5/16-inch
- Screwdriver, medium Phillips
- Screwdriver, large Phillips
- Scissors, general-purpose, 8-inch
- Pliers, snap ring, external
- Pliers, cutting (diagonals)
- Dolly, two-wheel

UNCRATING

Uncrate each item in the sequence that the installation procedure indicates. This ensures minimum dirt or foreign particle deposits on the equipment.

Equipment Cabinet

1. Cut the steel bands and remove the cardboard covered cabinet from the pallet (if provided).
2. Cut the fiber bands and remove the cardboard cover and plastic dust cover.

Magnetic Tape Transport

WARNING

The unit weighs more than one hundred pounds. Two men are needed for uncrating to prevent personal injury.

1. Cut the container tape and open the carton flaps (figure 9-9).
2. Remove the manual and transport mounting hardware packages.

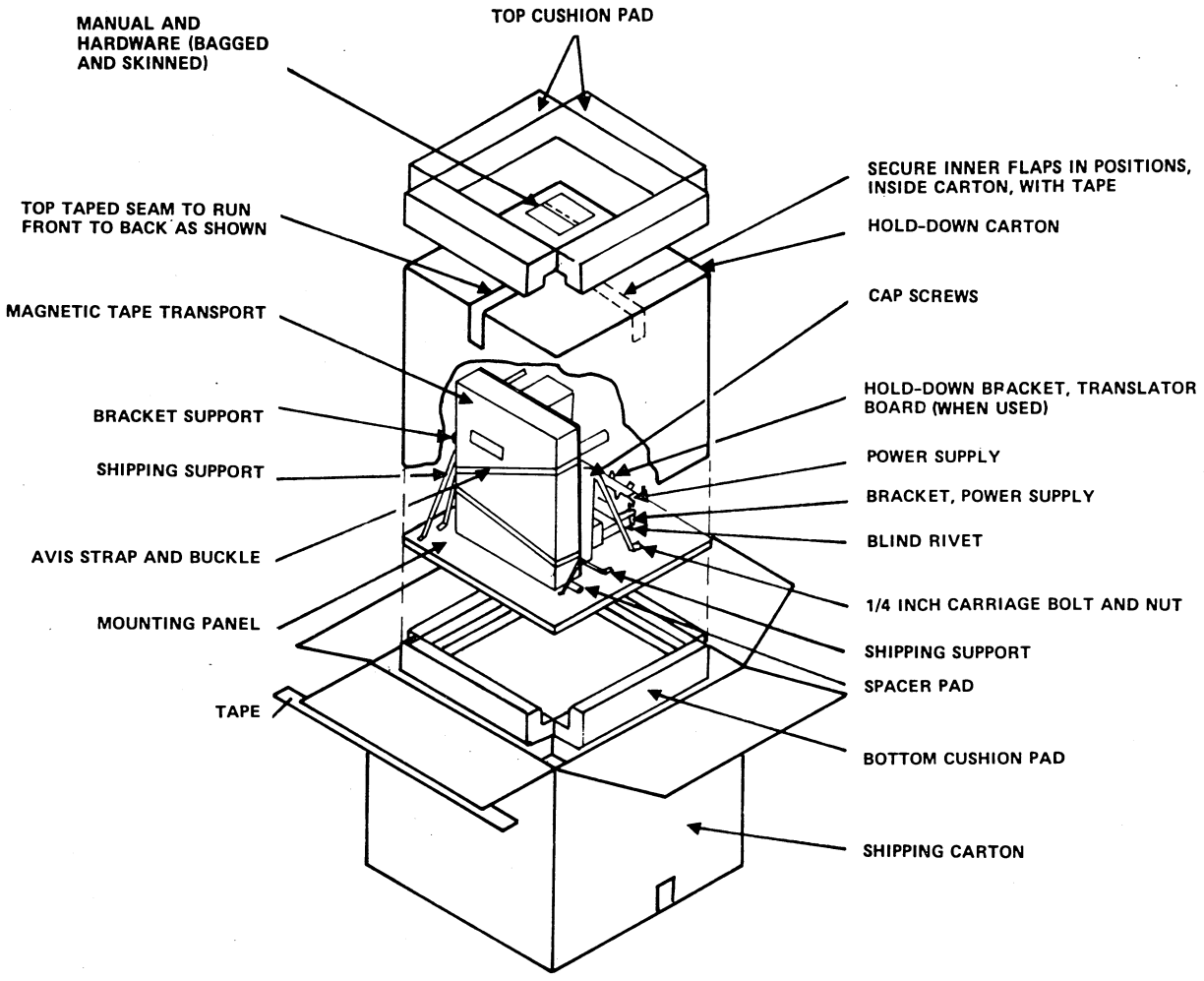

Figure 9-9. Unpacking

3. Remove the top cushion pad.

4. Remove the hold-down carton; lift straight up.

CAUTION

Removing the transport from the carton requires two men. Do not use components as lift handles.

5. With a man at each side of the carton, grasp the shipping support braces securing the transport to the wooden panel, and lift the unit straight up to remove it from the carton.

6. Inspect the unit to ensure removal of all packing materials.

7. Perform visual inspection per table 9-2.

INSTALLATION

The following are step-by-step procedures for installing single and dual transports in a single cabinet.

Cabinet Preparation

Single Magnetic Tape Transport Drive

1. Unpack the cabinet, cabinet door assembly, and installation kit. Check the contents of the kit against the enclosed parts list (figure 9-10).

2. Remove the four top and middle horizontal channel brackets and the two attached panel mounting brackets from the upper half of the cabinet interior.

3. Select eight spring nuts (part number 39005406) from the kit. Insert four on each side into the right and left rear vertical channels at positions that coincide with the holes in the ballast bars.

TABLE 9-2. INITIAL VISUAL INSPECTION

Item	Check and Desired Condition
Hinged deck and access door	Painted surface unmarred, no structural damage, open and close is smooth and positive
Switch lights (operators panel)	Intact and marking legible
Tape path	No visible obstructions in tape feed path and tape guides clean. No visible deformity to tape path components; all hardware firmly attached to tape deck
Head mounting assembly	Electrical terminations properly connected; no visible damage to read/write heads
Capstan wheel	Clean, free to rotate; check by inserting screwdriver into slotted shaft. Inspect for excessive surface wear/deterioration of elastomeric surface, gashes and scratches on capstan, and oxide accumulation.
Printed circuit cards	Check chassis for visible evidence of damage; check all cards for proper seating. Check for full card complement.
Plastic/glass enclosures	Check relative transparency, glass/plastic not chipped, smoked, or cracked.
Cabling/wiring	Check for viewable continuity, badly crimped or broken leads or exposed conductors. Insulation sleeving correctly positioned; connector pins not broken, bent or shorted
Pneumatics connections	Hose and tubing connections properly routed; no visible evidence of leaks
Fuses	Fuse elements not open; fuses properly seated within holders
Chassis ground	Unit is properly grounded.
Backplane	Pins not broken, bent, or shorted; no foreign material caught in the pins
Fiber optics	Not broken or loose

4. Select eight cap screws (part number 10126512). Attach the ballast bars to the cabinet sides where the spring nuts are located.

5. Using the drill motor with a no. 43 drill bit, drill door latch striker plate holes at the center punch dimples that coincide with the right side of the door latch.

6. Using a no. 36 drill bit, drill door hinge bracket holes at the center punch dimples that coincide with the left side of the door top hinge post.

7. Using a 4-40 tap and tap wrench, thread the door latch striker plate holes.

8. Using a 6-32 tap and tap wrench, thread the door hinge bracket holes.

9. Attach the door latch striker plate (part number 84927200) using the attaching hardware (part number 36159311) received with the door. Attach the lower door hinge bracket (part number 96744030) using part number 39398601 and the upper door hinge bracket (part number 96743998) using part number 17901509 that was received with the door.

10. Using the fastener block assembly (part number 96792200), fastener block (part number 96791000), and screws (part number 92748166), attach the fastener block assembly.

11. Using the horizontal support (part number 96791800) and attaching hardware (part numbers 10127113, 10125803, and 10125605), attach the support to the top of the cabinet.

12. Select four spring nuts (part number 39005406) and insert them in the front left side channel in positions that coincide with the holes in the left support bracket (part number 96791600). Using attaching hardware (part numbers 10126502, 10125806, and 10125608), attach the left support bracket.

13. Select another four spring nuts and insert them in the front right side channel in positions that coincide with the holes in the right support bracket (part number 96791500). Using attaching hardware (part numbers 10126502, 10125806, and 10125608), attach the right support bracket.

14. Select the remaining four spring nuts and insert two each in the right and left channels at positions that coincide with the holes in the center support (part number 96791700). Using attaching hardware (part numbers 10126502, 10125608, and 10125806), attach the center support.

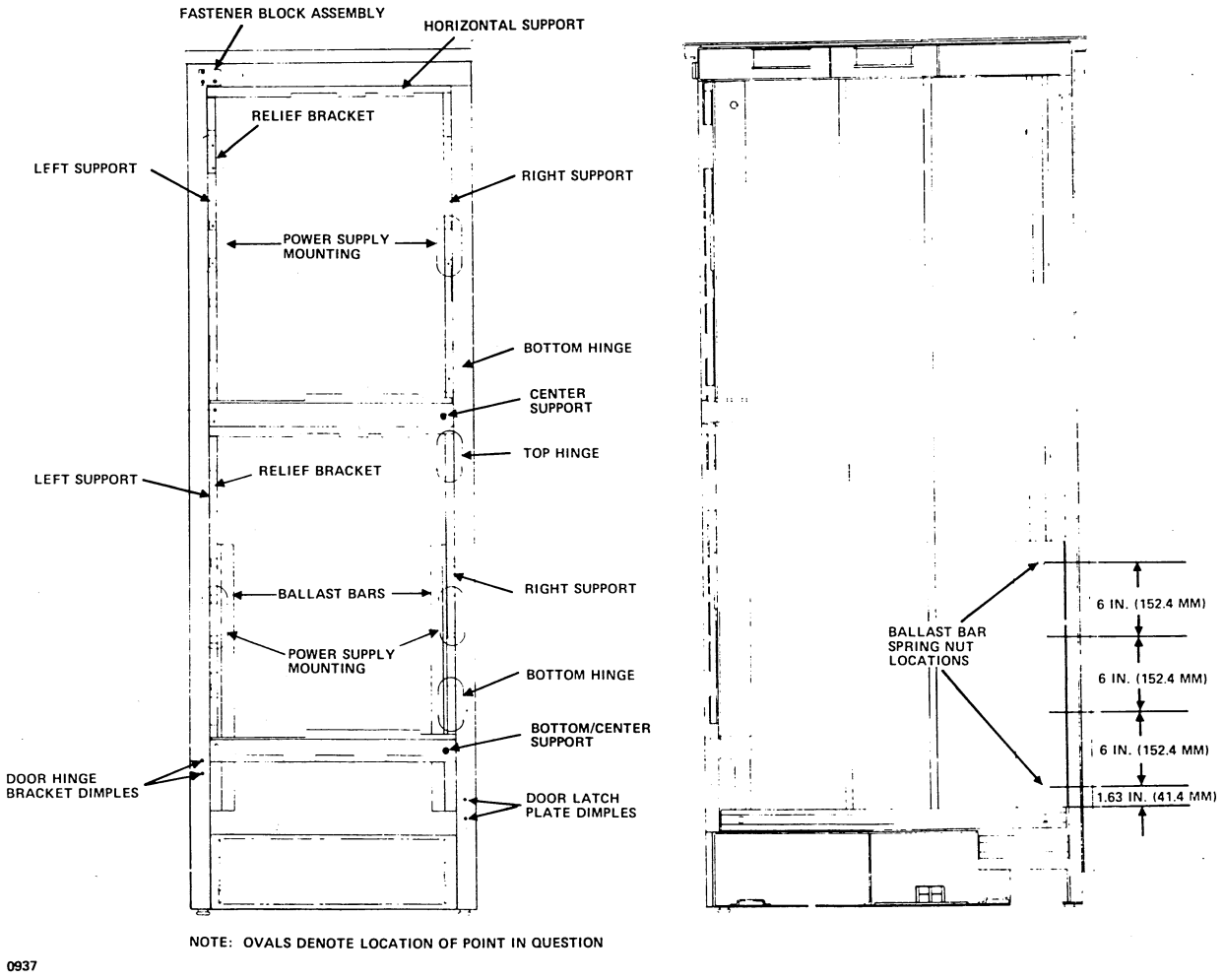

Figure 9-10. Signal Unit Cabinet Preparation

Dual Magnetic Tape Transport Drive

1. Unpackage the cabinet, door assembly, and installation kit. Check the contents of the kit against the enclosed parts list.

2. Remove the top and middle six horizontal channel brackets and the attached four panel mounting brackets from the cabinet interior (figure 9-11). Do not remove the bottom horizontal channel brackets.

3. Select eight spring nuts (part number 39005406) from the kit. Insert four on each side into the right and left rear vertical channels at positions that coincide with the holes in the ballast bars.

4. Select eight cap screws (part number 10126512). Attach the ballast bars to the side of the cabinet where the spring nuts are located.

5. Using the drill motor with a no. 43 drill bit, drill the door latch striker plate holes at the center punch dimples that coincide with the door latch, right side.

6. Using a no. 36 drill bit, drill the door hinge bracket holes at the center punch dimples that coincide with the door top hinge post, left side.

7. Using a 4-40 tap and tap wrench, thread the door latch striker plate holes.

8. Using a 6-32 tap and tap wrench, thread the door hinge bracket holes.

9. Attach the door latch striker plate (part number 84927200) using the attaching hardware (part number 36159311) received with the door.

10. Complete steps 10 through 13 of the single unit cabinet preparation above.

11. Select four spring nuts and locate them, two each, in the right and left channels at positions that coincide with the center support (part number 96791701). Using the attaching hardware (part numbers 10126502, 10125806, and 10125608), attach the center support.

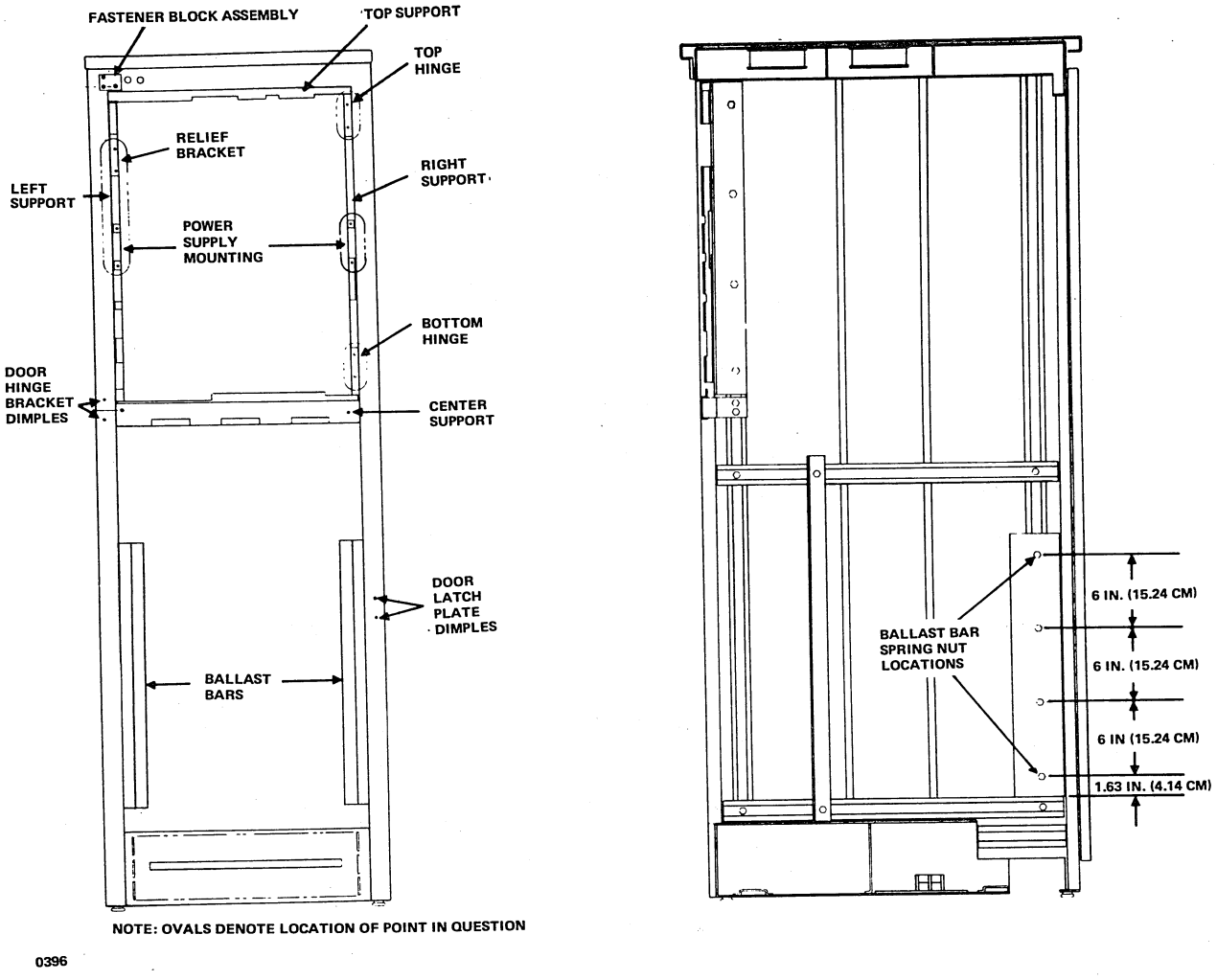

Figure 9-11. Dual Unit Cabinet Preparation

12. Perform steps 11 through 14 of the single unit cabinet preparation above. Locate all pieces using the center support as the top of the cabinet.

Magnetic Tape Transport Preparation

1. Select the top right bracket (part number 96791900), top left bracket (part number 96792100), and bottom bracket (part number 96792000) from the installation kit.

2. Clean the bracket surfaces with solvent to remove any oil or grease residue. Place the brackets on a clean horizontal surface with the underside up (figure 9-12).

3. Select the EMI contact strip (part number 96785600) from the installation kit. Cut the EMI contact strip into segments, as indicated in figure 9-12. Remove the protective cover from the adhesive back of each segment and attach the segment to the brackets.

4. After all segments of the EMI strips are applied to the underside of the bracket, turn the brackets over. Place the brackets on the support to protect the EMI strips from damage. Cut and attach the segments of the EMI strip to the topside of the brackets as indicated in figure 9-12, except for the segments that bridge the mounting holes of the brackets.

5. Remove the magnetic tape transport from the shipping container.

6. Remove the power supply from the magnetic tape transport wooden pallet.

   a. Select the mounting bracket (part number 96744692) and attaching hardware (part numbers 10127113, 10125803, and 10125605) from the installation kit.

   b. Attach the bracket to the power supply at the holes provided at the top rear.

   c. Select the stay track and two 6-32 x 3/8-inch screws from the transport hardware and attach the stay track to the inside edge of the power supply right hand support bracket.

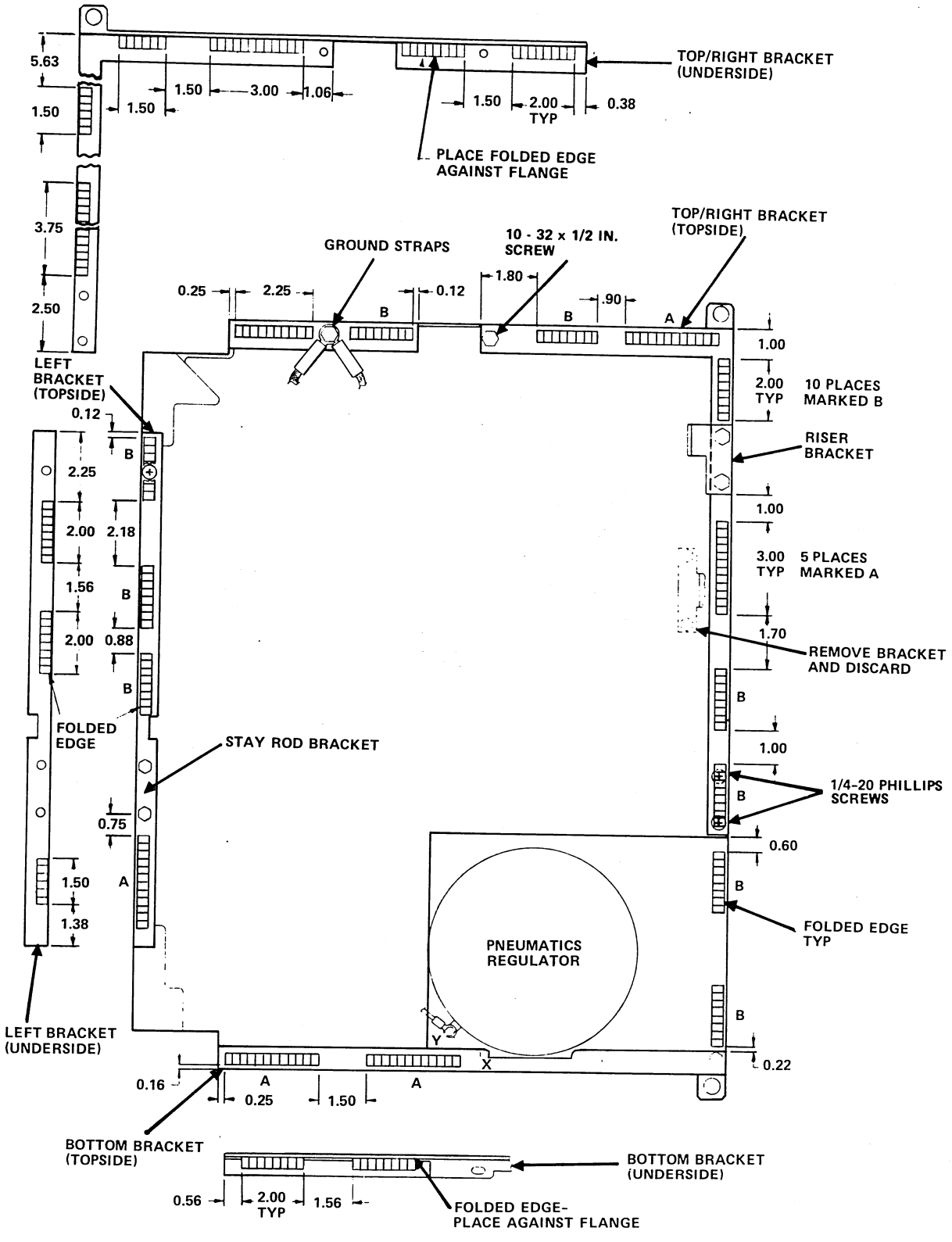

Figure 9-12. EMI Strip Application

d. Using the attaching hardware (four 1/4-20 x 3/8 cap screws, the lock washer, and the flat washer) from the transport hardware, attach the power supply to the cabinet (figure 9-13).

Magnetic Tape Transport Attachment

1. Select the bottom cabinet mount hinge (figure 9-13) and attaching hardware (two 1/4-20 screws, lock washers, and flat washers) from the transport hardware and two shims (part number 96792400) from the installation kit. Place the shims under the hinge and attach them to the cabinet frame at the location (bottom hinge) indicated in figure 9-10 or 9-11.

2. Select the top and bottom deck mount hinge (figure 9-13) and attaching hardware (four 1/4-20 screws, lock washers, and flat washers) from the transport hardware and attach them at the top and bottom mounting locations on the right side of the deck.

3. Remove the transport from the shipping support. Do not discard any hardware, since some items will be reused.

4. Select the top cabinet mount hinge and attaching hardware (two 1/2-20 screws, lock washers, and flat washers) from the transport hardware and two shims (part number 96792400) from the installation kit.

WARNING

Mounting the transport to the cabinet requires two men.

5. Using two men, lift the transport up to the cabinet and attach the bottom hinge. While one man supports the transport, the other must mate the top hinge pieces and attach the shims and top hinge to the cabinet.

6. On the right side when facing the rear of the deck, remove the screws attaching the latch bracket (part number 8670400) and lamp bracket from the transport. Discard the latch bracket and replace the screws to secure the lamp bracket.

7. Select the relief bracket (figure 9-13) and attaching hardware (two 1/4-20 screws, lock washers, and flat washers) from transport hardware. Attach them at the location indicated in figure 9-10 or 9-11.

EMI Bracket Attachment

Top Right EMI Bracket

1. Remove the ground straps from the deck (figure 9-12).

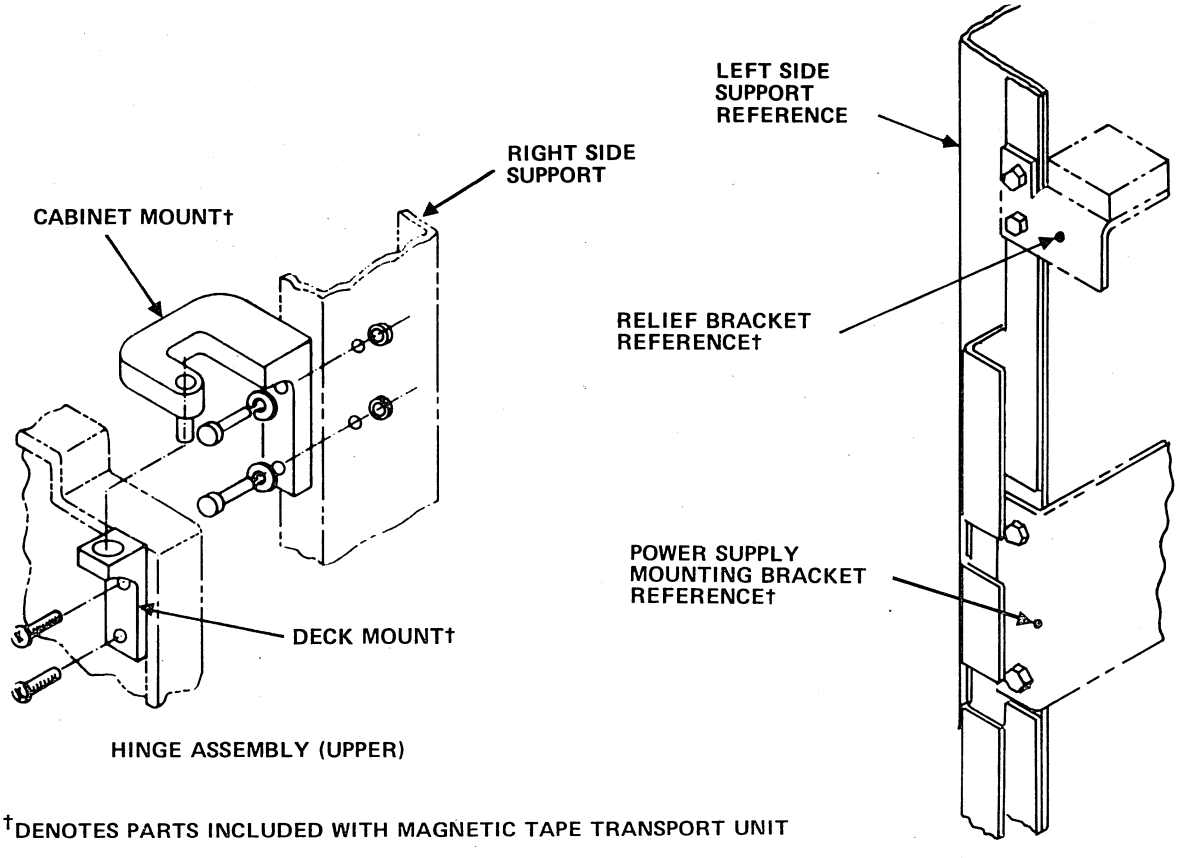

†DENOTES PARTS INCLUDED WITH MAGNETIC TAPE TRANSPORT UNIT

0940

Figure 9-13. Power Supply, Hinge Assembly, and Relief Bracket Attachment

2. Select the top right bracket, with EMI strips attached. Attach the bracket using the ground bolt, with ground straps, two 1/4-20 flat head Phillips screws, and one 10-32 x 1/2-inch pan head Phillips screw from the transport hardware (figure 9-12).

3. Select the riser bracket and attaching hardware (1/4-20 screws, lock washer, and flat washer) from the transport hardware. Attach the riser bracket to the deck at the location indicated in figure 9-12.

4. Add the EMI strips that bridge the flat head screw heads. Also add the EMI strips to the pneumatics regulator bracket.

Left EMI Bracket

1. Select the left bracket, with EMI strips attached. Using one 1/4-20 x 1/2-inch flat-head Phillips screw, attach the top end to the deck's left side (figure 9-12).

2. Select the stay rod bracket and attaching hardware (two 1/4-20 screws, lock washers, and flat washers) from the transport hardware. Attach them on the top of the left EMI bracket at the location indicated in figure 9-12.

3. Add the EMI strip to the bridge flat-head screw.

Bottom EMI Bracket

1. Remove the three screws from the bottom of the pneumatics regulator.

2. Select the bottom bracket with EMI strips attached.

3. Attach the bottom bracket using the three screws removed in step 1.

Final Preparation

1. Select the stay rod, nylon washer, and retainer (slip) ring from the transport hardware. Slide the nylon washer onto the long end of the stay rod.

2. Insert the stay rod into the stay rod bracket and secure with the slip ring.

3. Using shims, adjust the relief bracket nylon pad to align the captive screws with the threads in the top and center support brackets when the transport is secured to the cabinet.

4. Cut and apply foam padding to all areas of the cabinet interior except the ventilation screens.

5. Cut 3-inch segments of the EMI contact strip and apply, three inches apart, to the door assembly inside flange. Apply to the door flange to ensure that contact is made with the stainless steel strip on the cabinet.

6. Attach the door to the cabinet and adjust the door latch for proper closure.

Translator Board

1. Remove the translator board from the shipping package.

2. Attach the translator board housing using the attaching hardware (4-40 screws, lock washers, flat washers, and spacers) on the top of the bracket attached to the power supply bracket. Attach the translator board with the components facing the front of the cabinet (connector J1A toward the right, figure 9-14).

3. Attach the cable connectors (part no. 96753942) to the translator board connectors (figure 9-14).

4. Install translator board strain relief bracket and secure cable to the bracket using adjustable cable ties.

NOTE

Secure bracket either to back of power supply chassis or translator board housing.

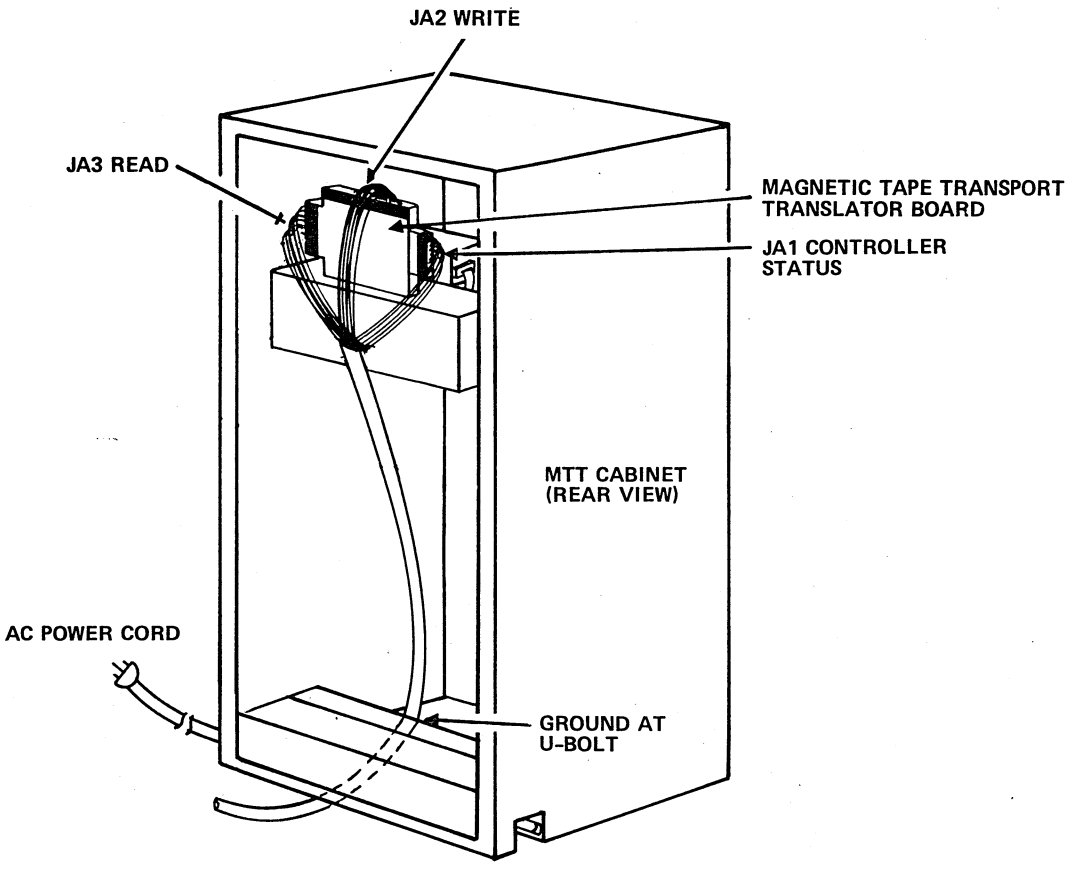

Figure 9-14. Translator Board Connections

The module drive is a random-access device that can use removable disk packs as the storage medium or a disk storage device with fixed media. The module drive subsystem can consist of one module drive interface board or one module drive adapter, one module drive control unit (controller/formatter), and one to eight module drives. The module drive interface/adapter board plugs directly into the processor chassis backplane. Power for the module drive interface/adapter board is obtained from the processor power supplies via backplane connections. Power for the module drives and the control unit is obtained from the site power source.

The module drive interface/adapter couples control, data, and status signals between the processor and the module drive control unit. The control unit handles from one to eight module drives in a daisy-chain configuration (figures 10-1 and 10-2).

PARTS AND EQUIPMENT

Parts and Equipment	Equipment Number	Part Number
Module drive interface	GB138-A	96752140
Module drive adapter	GB145-A	96890063
Paddleboard (PWA)	--	96870430
Cable, module drive bus in	--	96720677 or 96870930†
Cable, module drive bus out	--	96720678 or 96870935†
Module drive adapter	GB145-B	96890063
Cable, bus in expansion	--	96744226
Cable, bus out expansion	--	96744227
Module drive adapter	GB145-D	96890090
Paddleboard (PWA)	--	96870430
Cable, module drive bus in	--	96720677 or 96870930†
Cable, module drive bus out	--	96720678 or 96870935†
Cable, bus in expansion	--	96744226
Cable, bus out expansion	--	96744227

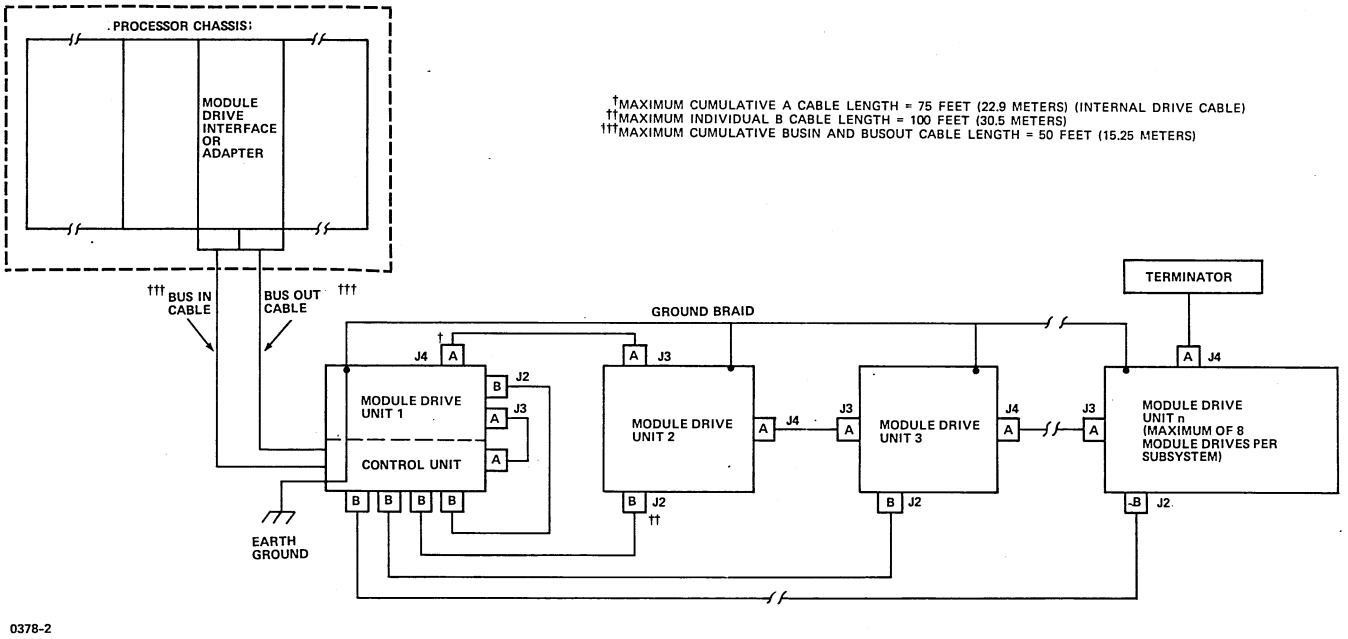

Figure 10-1. Module Drive Subsystem Block Diagram (Single CPU)

†Meets FCC EMI requirements.

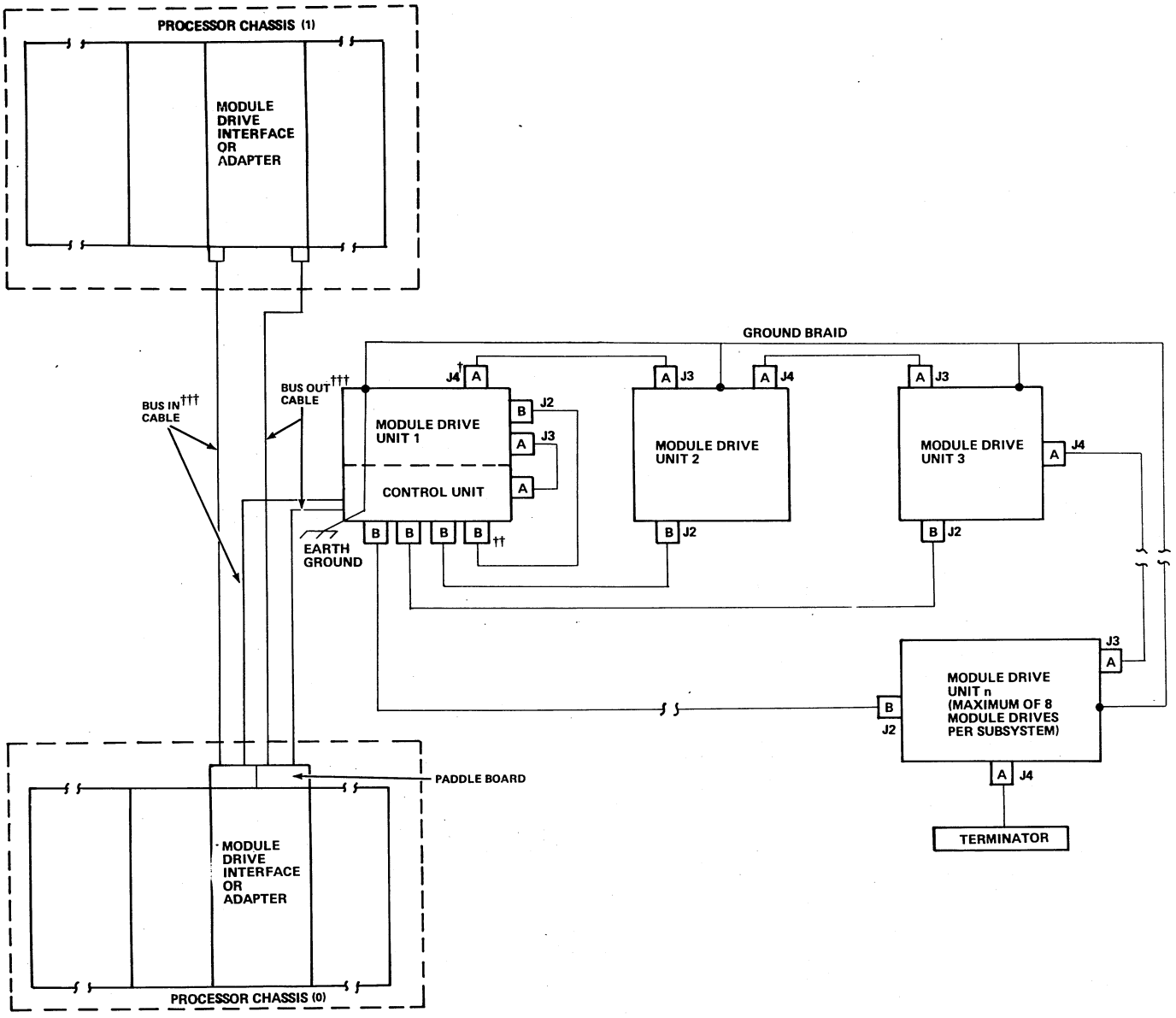

†MAXIMUM CUMULATIVE A CABLE LENGTH = 75 FEET (22.9 METERS) (INTERNAL DRIVE CABLE)
††MAXIMUM INDIVIDUAL B CABLE LENGTH = 100 FEET (30.5 METERS)
†††MAXIMUM CUMULATIVE BUSIN AND BUSOUT CABLE LENGTH = 50 FEET (15.25 METERS)

1880

Figure 10-2. Module Drive Subsystem Block Diagram (Dual CPU)

Parts and Equipment	Equipment Number	Part Number
Finalization kit	YA123-B	--
Paddleboard (PWA)	--	96870430
Cable, module drive bus in	--	96720677 or 96870930†
Cable, module drive bus out	--	96720678 or 96870935†
Finalization kit	YA124-B	--
Cable, bus in expansion	--	88893703
Cable, bus out expansion	--	88893704
Finalization kit	YA127-B	--
Cable, adapter-to-CU, single CPU, bus in	--	96721490
Cable, adapter-to-CU, single CPU, bus out	--	96721495
Module drive control unit	FA727-D	77525005
Cable, A (shielded)	--	77569705
Cable, B (shielded)	--	47201703
Terminator	--	40067207
Cable jumper, A	--	40020504
Module drive (300 megabyte)	BJ402-A or BJ402-B	77445021 77445022
Mini-module drive (15 megabyte)	BZ403-A or BZ403-B	73016520 73016521
Module drive (80 megabyte)	BJ701-A or BJ701-B	76420017 76420018
Module drive (25 megabyte)	BJ701-J or BJ701-K	76420072 or 76420073

TOOLS REQUIRED

Installation of the module drive requires the following tools:

- Spirit level (24 inches long)
- End wrenches (9/16-inch)
- Roller lift (two required)
- Set of Allen wrenches
- Scratch pack

POWER REQUIREMENTS

SITE ELECTRICAL REQUIREMENTS

Section 1 lists the module drive and control unit power requirements. Figure 10-3 illustrates module drive line current versus start-up time.

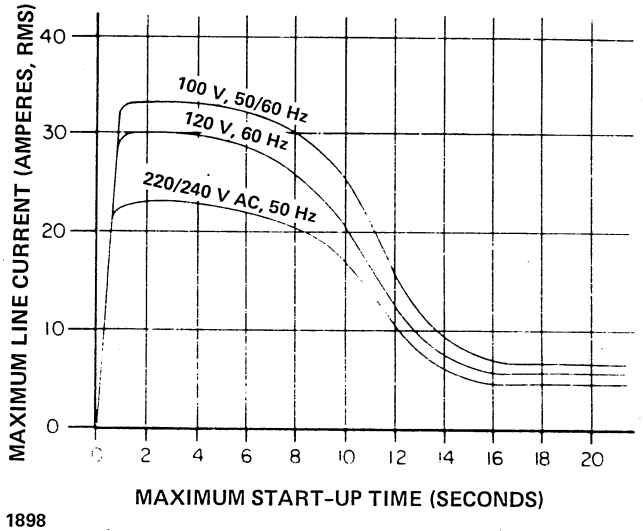

Figure 10-3. Line Current Versus Start-Up Time

AC POWER CONNECTIONS

Each module drive receives its ac power via a 10-foot (3.05-meter) cable. This cable originates from line filter FL1 located in the rear of the cabinet below the power supply.

The input power is available at terminal board TB1. This terminal board is located under the deck and ahead of the transformer; it is accessible by raising the deck. The drive is adapted to the desired input voltage option by wiring terminal board TB1 according to figure 10-4.

The green wire is the safety ground. It is not to be used as neutral because it is a noncurrent-carrying ground. This wire connects to a lug inside the drive.

† Meets FCC EMI requirements

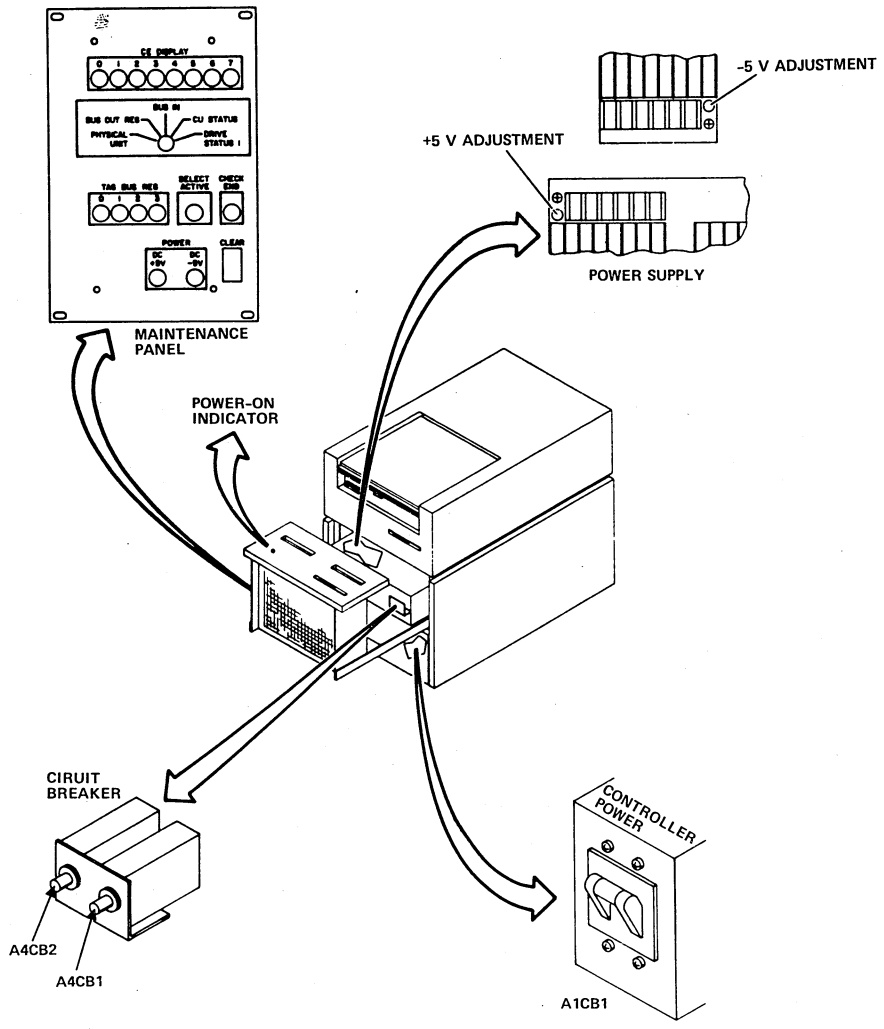

LINE FILTER OUTPUT	TERMINAL BOARD TB1					
	1	2	3	4	5	6
60 HZ 100 V	LF1-4 NEUT	LF1-3 0				
60 HZ 120 V	LF1-4 NEUT		LF1-3 0			
50 HZ 100 V	LF1-4 NEUT	LF1-3 0				
50 HZ 220 V	LF1-4 0				LF1-3 0	
50 HZ 240 V	LF1-3 0					LF1-3 0

TB1

1	1 BLACK 2 WHITE	TO T1 TRANSFER (REFER TO BASE ASSEMBLY WIRE LIST)
2	1 ORANGE 2 GREY	
3	1 BROWN 2 BLACK	
4	YELLOW	
5	GREY	
6	WHITE	

NOTES:

1. DENOTES INSTALLATION OF JUMPER
2. 0 = AC POWER INPUT
3. NEUT = NETURAL INPUT

1 = WIRE COLOR FOR 50 HZ UNITS
2 = WIRE COLOR FOR 60 HZ UNITS

1899

Figure 10-4. Module Drive Control Unit and Indicators

The 220/240 V ac, 50 Hz unit power connector must be supplied by the customer. An applicable site 50 Hz connector with a current rating of at least 15 amperes must be used for proper operation. Install the connector to the power cable as follows:

- Green or green/yellow wire to the ground terminal
- Black or brown to phase one
- White, blue, or gray to the neutral terminal

BJ402 AND BJ701 MODULE DRIVE

UNCRATING

CAUTION

Use tools carefully when uncrating the unit to prevent damage to any assembly.

As the unit is uncrated, inspect it for possible shipping damage. All claims for this type of damage should be filed promptly with the transporter involved. If a claim is filed for damages, save the original crating materials. Most crating material may be reused if reasonable care is used while uncrating.

BJ402 Unit

WARNING

Use care while cutting the steel straps since they may whip when they are cut.

The BJ402 module driver unit must be properly packaged whenever it is shipped from one location to another.

The unit leaves the factory packaged to ensure it is not damaged during shipment to the installation site. This packaging must be removed prior to installing the unit.

The first step in unpacking is to remove the outer package consisting of a corrugated cardboard cover, wood frame, and plastic dust cover. The remainder of the packaging is removed by following the instructions on the unpackaging instruction sheet contained in the pack shroud area. All packaging materials should be retained in the event it is necessary to reship the unit.

If reshipment of the unit becomes necessary, packaging instructions may be obtained from:

Packaging Engineer, Material Services Department
Normandale Division, MPI
7801 Computer Avenue
Minneapolis, MN 55435

BJ701 Unit

WARNING

Use care while cutting the steel straps since they may whip when they are cut.

1. On an air-shipped unit, cut the straps securing the unit to the skid.
2. Remove the external packing material.
3. Remove the polyethylene dust cover.
4. Open the rear door, and look inside the unit to determine how the case is secured.

NOTE

The acoustic top case can have one of two methods of latching; either two 1/4-turn fasteners or a slide-bolt latch.

5. Release the top case as follows:
   a. If the case is secured by 1/4-turn fasteners, use a screwdriver to release the two 1/4-turn fasteners, then lift up on the rear of the case.
   b. If the case is secured by a slide-bolt latch, use a six millimeter hex wrench to actuate the latch while lifting upward on the rear of the case.
6. Continue to lift the case upward until the support rod reaches its end of travel.
7. Then, lower the case until the support rod bottoms securely in the stop groove of the support rod slide.
8. Open the pack access cover by squeezing the cover latch (figure 10-5).
9. Remove the screw securing the deck assembly to the deck hold-down bracket (figure 10-6). Loosen the screw securing the bracket to the base assembly. Slide the bracket away from the deck as far as the bracket will go, and rotate the bracket 90 degrees clockwise. Tighten the screw. Install the screw removed from the deck into the hole in the deck, and tighten it.
10. Remove the two deck-to-frame hold-down screws at the bottom of the shroud (figure 10-6).

NOTE

Do not raise the deck without first installing the spacer and hold-down screw between the rear shock mounts and the hinge, as shown in figure 10-7.

11. Close the pack access cover.
12. Raise the deck assembly, and install the deck support bracket (figure 10-7).
13. Inspect the base assembly, deck assembly, and power supply for damage.
14. Support the deck assembly while releasing or removing the deck support bracket.
15. Lower the deck assembly and raise the pack access cover.

16. Lower and secure the deck assembly to the base assembly using the deck-to-frame hold-down screws removed in step 9.

17. Remove the screw located between the two shock mounts at the rear of the deck (figure 10-6). Remove the spacer between the deck and the frame. Install the screw and spacer in the keeper hole in the deck casting.

18. Inspect the top of the deck assembly for damage.

19. Loosen the turnlock fastener securing the logic chassis to the support arm at the rear of the deck.

20. Grasp the logic chassis fan, and raise the chassis up. Lock the chassis in this position using the slide bar on the top of the magnet assembly (figure 10-6).

21. Inspect the logic chassis connectors and wiring for loose or broken wires. Make sure all logic cards are firmly seated in the connectors.

22. Lower the logic chassis, and secure the chassis in place with the turnlock fastener.

23. Remove the carriage locking pin, and place it in the storage hole (figure 10-6).

24. Close the pack access cover.

25. Lower the top case as follows:

    a. Push the case assembly forward until it reaches its end of travel.

    b. Lift up on the support rod.

    c. Lower the case while continuing to lift up on the support rod just long enough for it to clear the stop groove in the guide; then continue to lower the case to its closed position.

26. Secure the case as required by:

    a. Using a screwdriver to turn the two 1/4-turn fasteners to their locked postion, or

    b. Confirming that the slide-bolt latch is fully extended below the latch catch.

27. Remove the wood board between the primary filter brackets (figure 10-8).

28. Remove the primary air filter from the interior of the drive, and install it in the primary filter brackets.

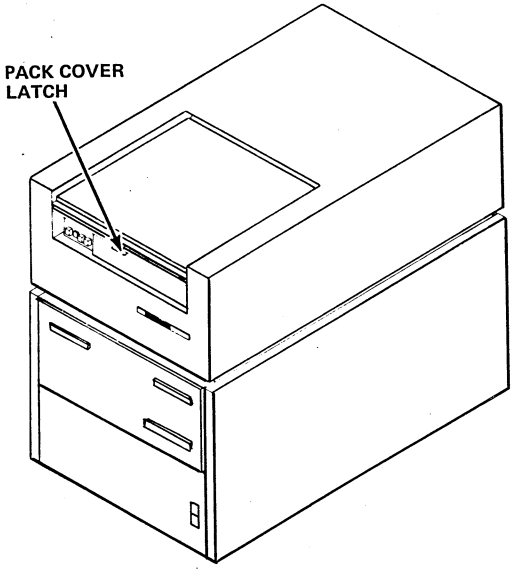

CABINET WITH TOP-MOUNTED DRIVE AND CONTROL UNIT FACILITIES UNIT 1

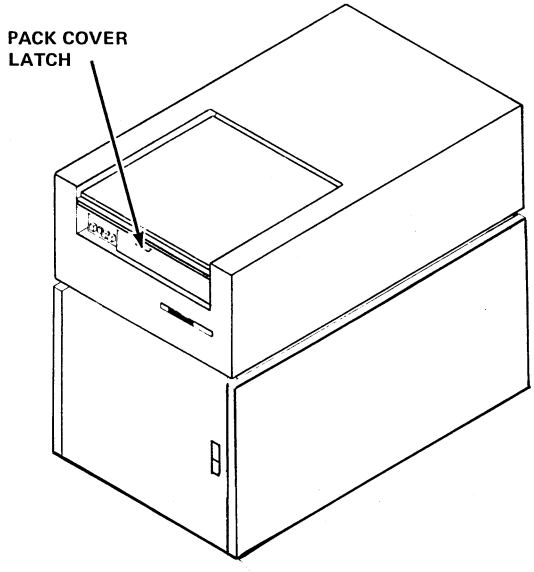

CABINET WITH TOP-MOUNTED DRIVE

UNITS 2 THROUGH n

0405-1

Figure 10-5. BJ402 and BJ701 Module Drive Physical Configuration

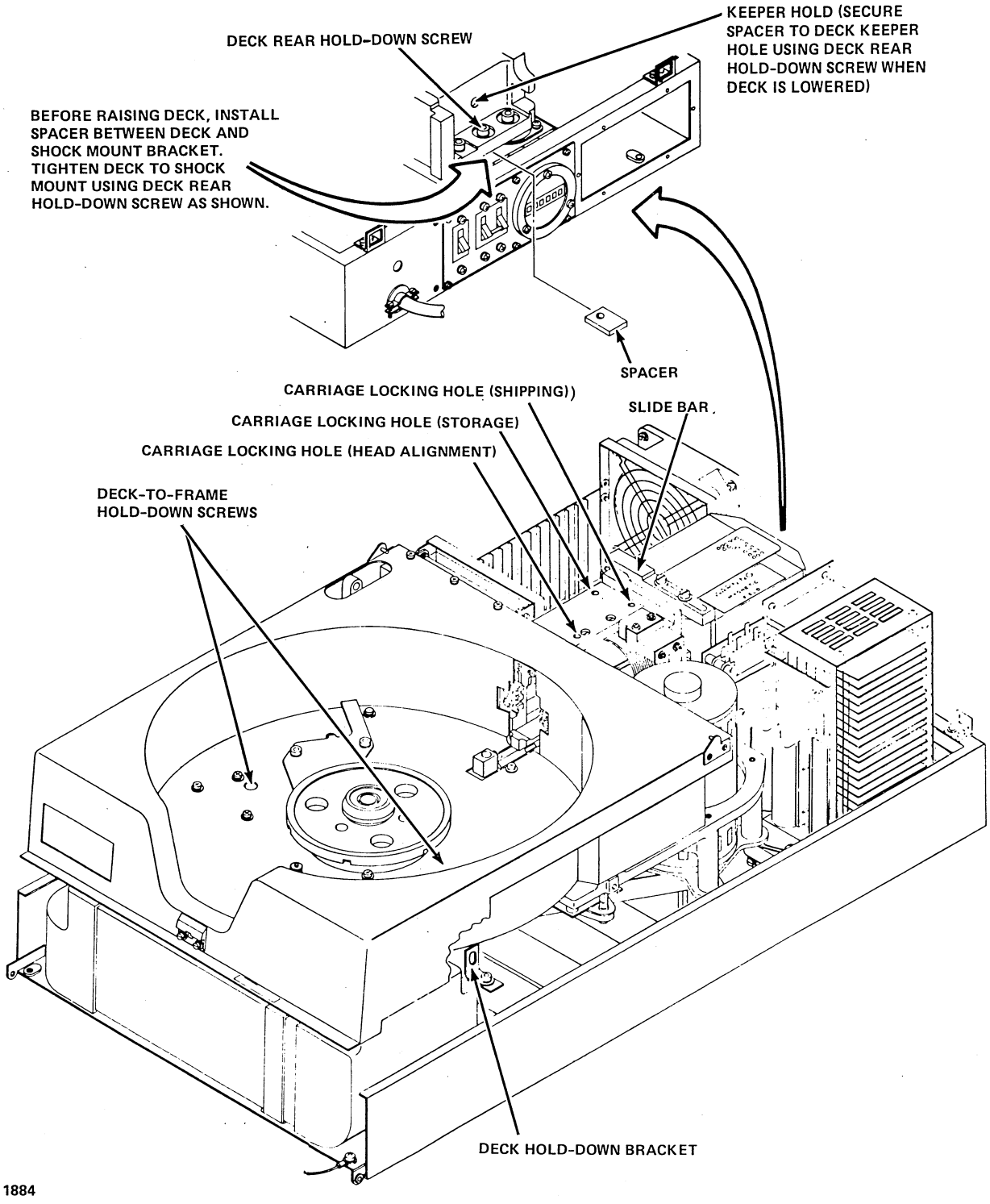

Figure 10-6. Drive Shipping Hardware

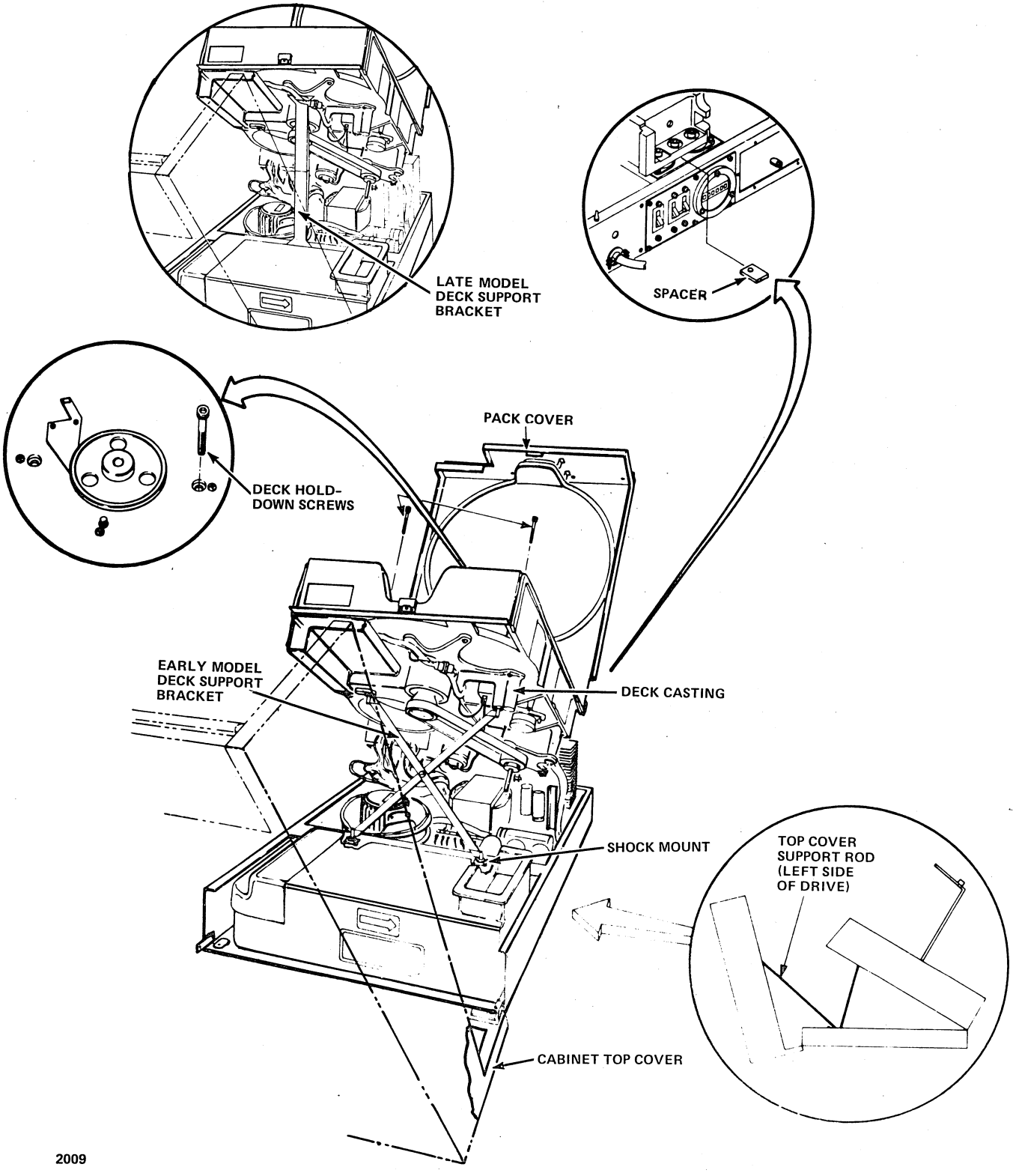

Figure 10-7. Deck Support Bracket

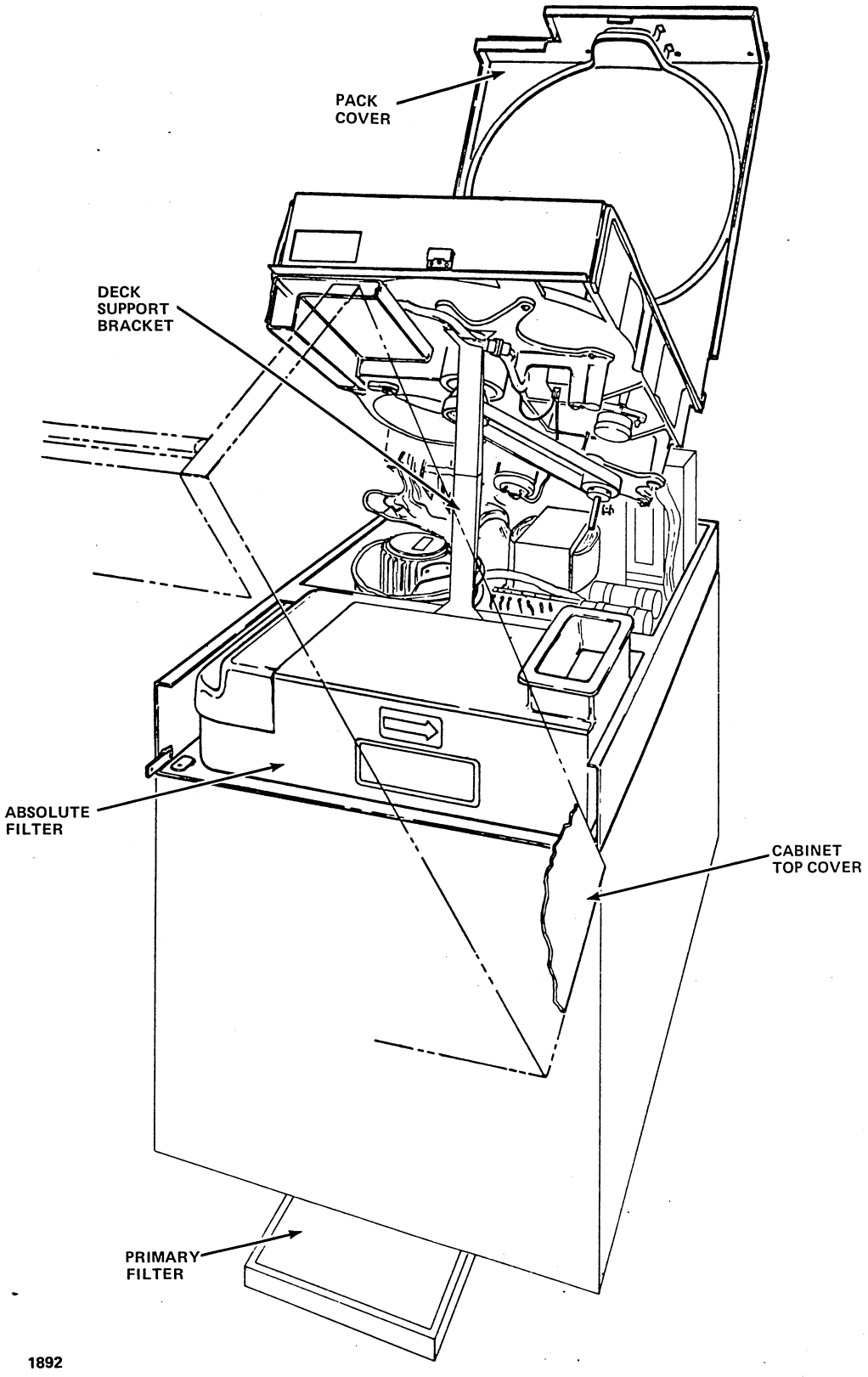

Figure 10-8. BJ701 Module Drive Air Filter Locations

Control Unit

1. Inspect the carton for possible shipping damage. All claims for this type of damage should be filed with the carrier involved.

NOTE

Do not remove the carton base containing the module drive control unit from the skid until the installation is complete.

2. Using the two roller lifts, move the module control unit (while still on the skid) to the immediate area where the unit is to be installed.

WARNING

Use care when cutting the straps (steps 3 and 7) since they may whip when they are cut.

3. Remove the straps securing the carton to the skid.

4. Remove the top cover from the carton (figure 10-9).

5. Remove the box containing the accessories and parts kit (figure 10-9).

6. Remove the other external packing, leaving the controller exposed (figure 10-9).

7. Remove the straps securing the control unit to its installation platform.

8. Check the module drive control unit for visible signs of damage. Report any damage or missing items to the CDC representative responsible for the equipment.

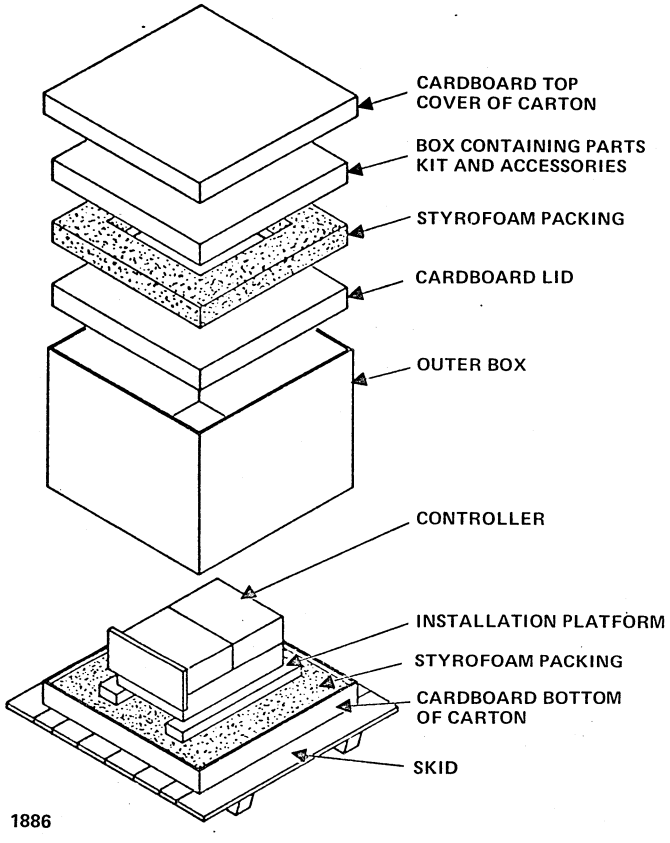

Figure 10-9. Module Drive Control Unit Crating

DRIVE INSTALLATION PREPARATION

Module Drives

Module drive installation preparation involves positioning, leveling leg adjustment (figure 10-10) and alignment of the unit. Refer to section 1 of the hardware maintenance manual of the unit to be installed.

Control Unit Installation

The following steps describe the installation of the parts kit and controller into the drive cabinet. Also explained is the attachment of I/O cables, ground straps, and power cables. The FA727 Control Unit can be installed into either the BJ701 Module Drive Cabinet or the BU281 Mass-Storage Cabinet. Figures 10-11 through 10-14 show the cabinets as they appear before and after the installation. They indicate the parts that have to be removed before the controller can be installed.

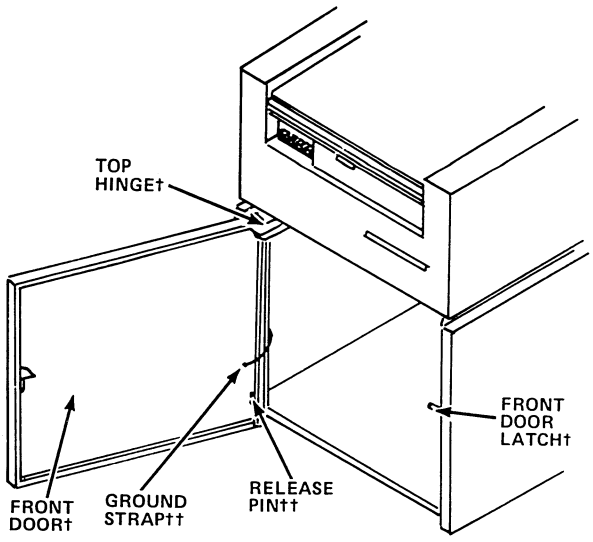

†REMOVED AND NOT REPLACED
††USED ON THE CONTROLLER FRONT DOOR

1888

Figure 10-11. Module Drive Cabinet Before Controller Installation

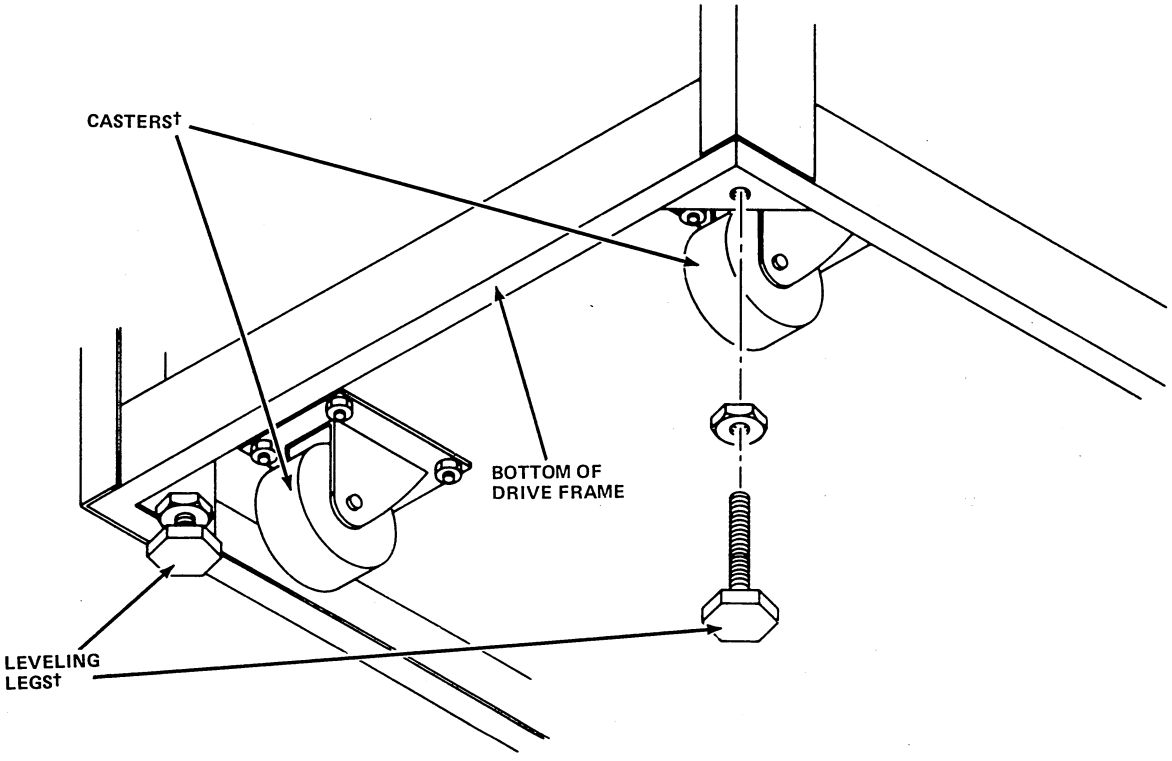

†LOCATED AT EACH CORNER OF FRAME

1887

Figure 10-10. Leveling Legs

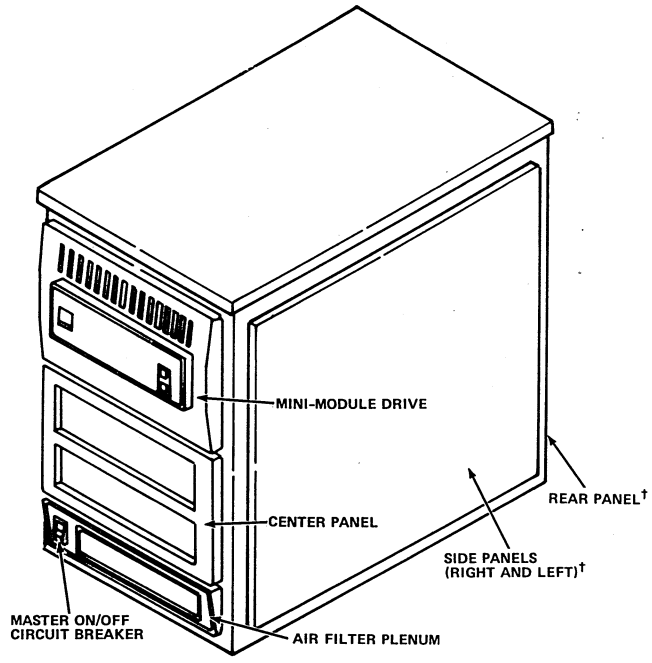

Figure 10-12. BU281 Mass-Storage Cabinet Before Controller Installation

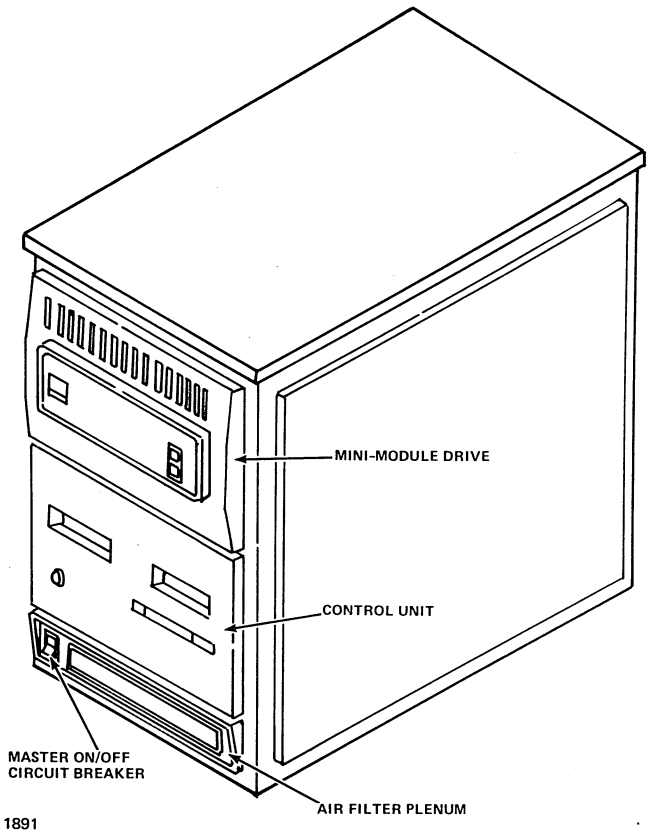

Figure 10-14. BU281 Mass-Storage Cabinet After Controller Installation

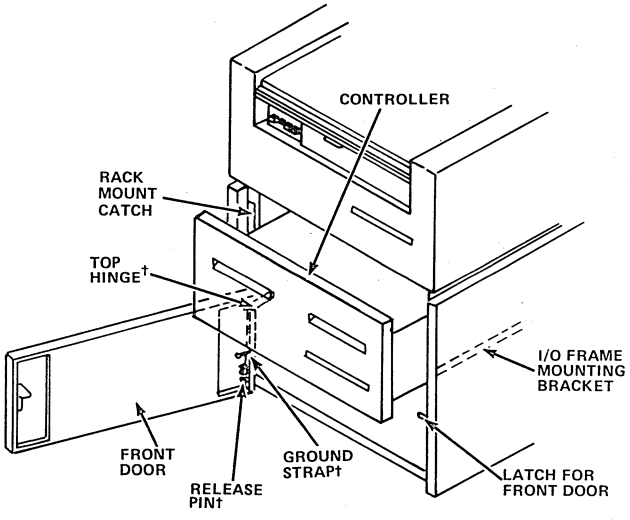

Figure 10-13. BJ701 Module Drive Controller Installation

Cabinet Preparation

BJ701 Module Drive Cabinet

1. Open the rear door of the drive cabinet.
2. Remove the front door of the drive cabinet as follows:
   a. Remove the ground strap (refer to figure 10-11). Save the strap and the attaching hardware for use later during the installation procedure.
   b. Remove the door by lifting out the release pin (figure 10-11), then slip the door off the upper hinge. Save the releasing pin for use when installing the controller.
   c. Remove the upper hinge from the cabinet (refer to figure 10-11).
3. Remove the front door latch (refer to figure 10-11).
4. Remove the right side panel as follows:
   a. Remove the ground strap.
   b. Loosen the two quarter-turn fasteners, and pull the side panel off.
5. Remove the left side panel following the same procedure as in step 4.

BU281 Mass-Storage Cabinet

The BU281 Mass-Storage Cabinet side panels are attached to the frame by a combination of metal upper hooks and two captive screws (figure 10-15). The rear panel is attached to the frame by a combination of metal upper hooks and two captive screws (figure 10-16). The front panel is held in place by four screws. To remove and replace the side panels, perform the following:

1. Loosen the captive screws until the bottom of the panel is loose.

2. Remove the right side panel as follows:

   a. Extend the bottom of the panel outward approximately 30 degrees.

   b. Lift up to free the top edge from the hook brackets.

3. Remove the left side panel following the same procedure as in step 2.

4. Remove the rear panel as follows:

   a. Loosen the captive screws until the bottom of the panel is loose.

   b. Extend the bottom of the panel outward approximately 30 degrees.

   c. Lift up to free the top edge from the hook brackets.

5. To replace the side and rear panels, perform steps 1 through 4 in reverse order.

6. To prepare this cabinet for the controller installation, remove the center panel as follows, discarding after removal:

   a. Remove the mounting screws and stand-offs.

7. Remove the air filter assembly located on the front of the cabinet by lifting up approximately one-fourth inch and pulling outward to clear the shoulder screws.

8. To replace the air filter assembly, perform step 7 in reverse order.

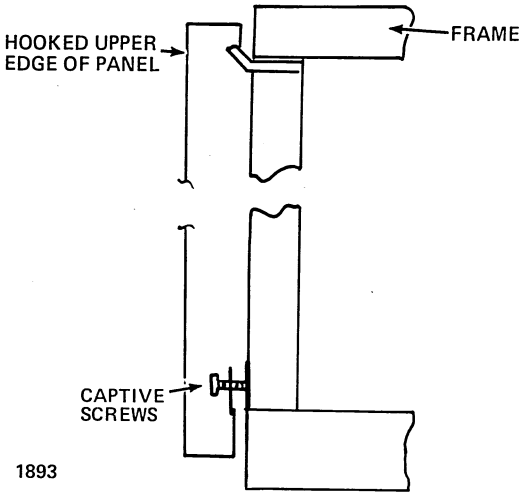

Figure 10-15. BU281 Mass-Storage Cabinet Side Cover Attaching Detail

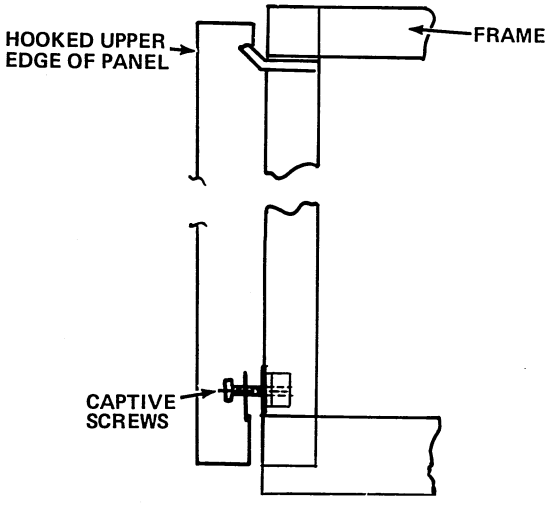

Figure 10-16. BU281 Mass-Storage Cabinet Rear Panel Attaching Detail

CONTROLLER MOUNTING

CAUTION

Block the casters on the drive cabinet so it does not move during controller installation.

Install the controller in either the BJ701 Module Drive Cabinet or the BU281 Mass-Storage Cabinet as follows:

1. Position the controller so it is directly in front of the device cabinet, as shown in figures 10-17 or 10-18.
2. Remove the screws securing the controller to the installation platform (refer to figure 10-17 or 10-18).

WARNING

Be certain to give proper support to the controller when extending the logic chassis and power supply (step 3). The weight may be shifted to the front end of the controller, thus giving it a tendency to topple if not supported and causing injury to personnel and damage to the unit.

3. Extend the controller logic chassis and power supply until the spring catches snap into the holes in the slides (refer to figure 10-17 or 10-18). This allows the controller to slide into the drive cabinet.
4. Position the power cable as shown in figure 10-17 or 10-18.
5. Raise the rear of the controller, and slide it into the I/O frame mounting brackets. Push the controller into the cabinet until the I/O frame mounting ears contact the front of the frame (refer to figure 10-19).
6. Slide the logic chassis and power supply in far enough to ensure that the controller is resting securely on the I/O frame mounting brackets but not so far as to interfere with the installation of the screws in step 7.

NOTE

Do not tighten the screws installed during the following two steps until the controller has been aligned properly (step 9).

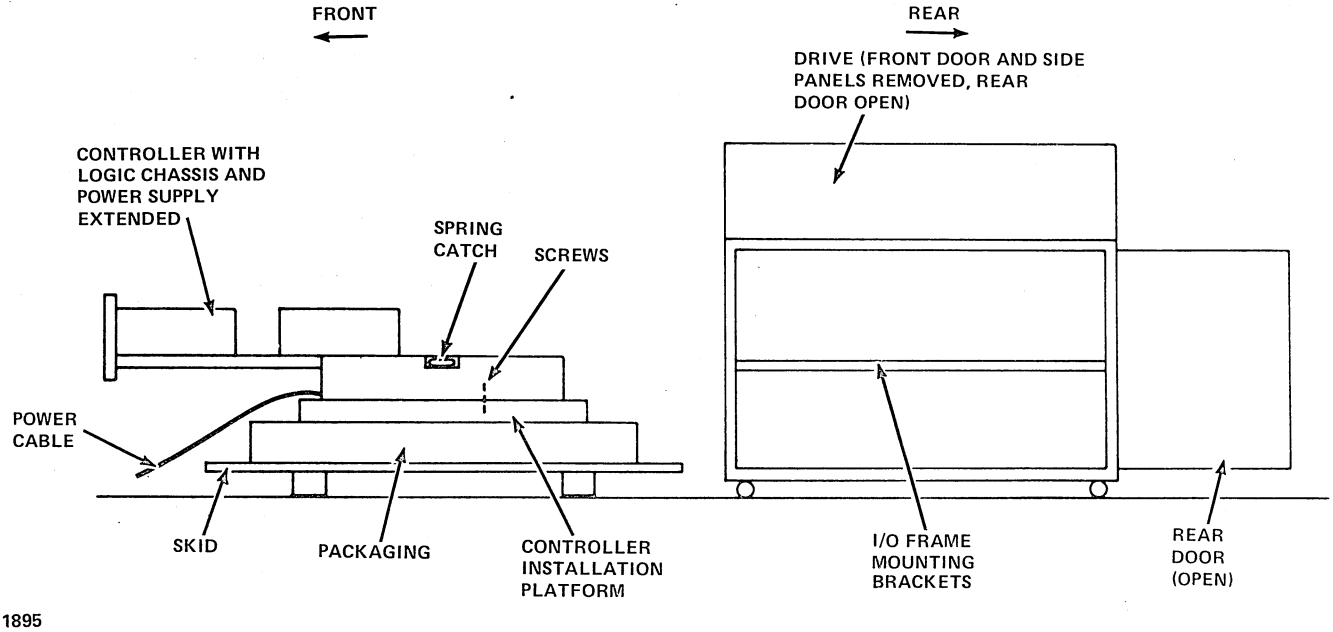

Figure 10-17. BJ701 Module Drive Cabinet Installation Orientation

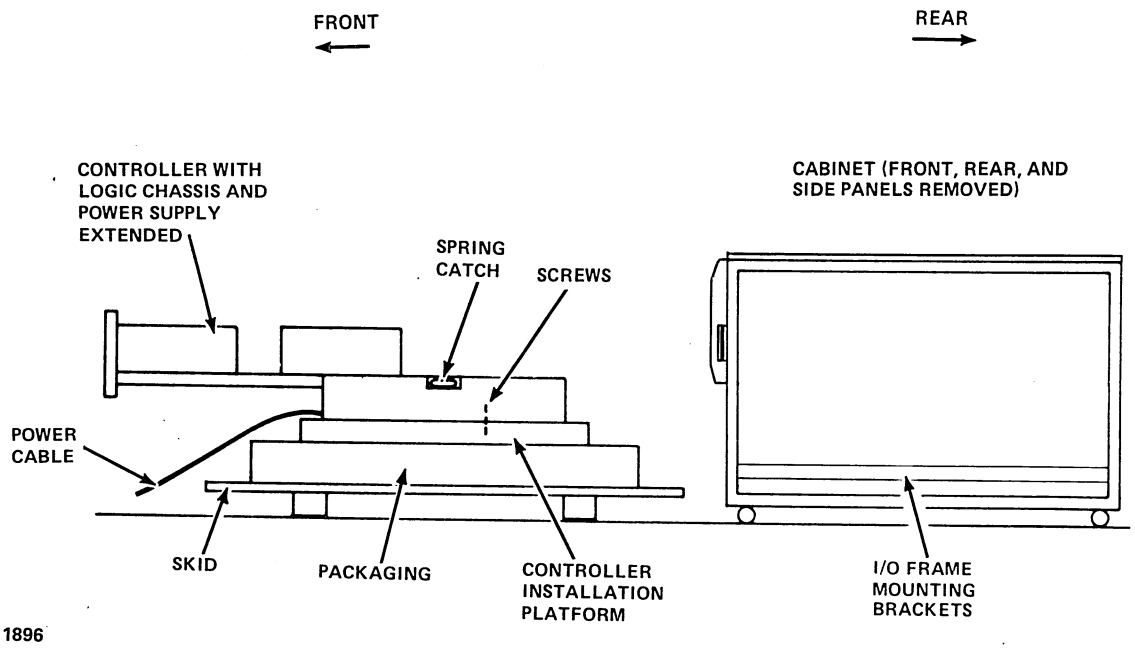

Figure 10-18. BU281 Mass-Storage Cabinet Installation Orientation

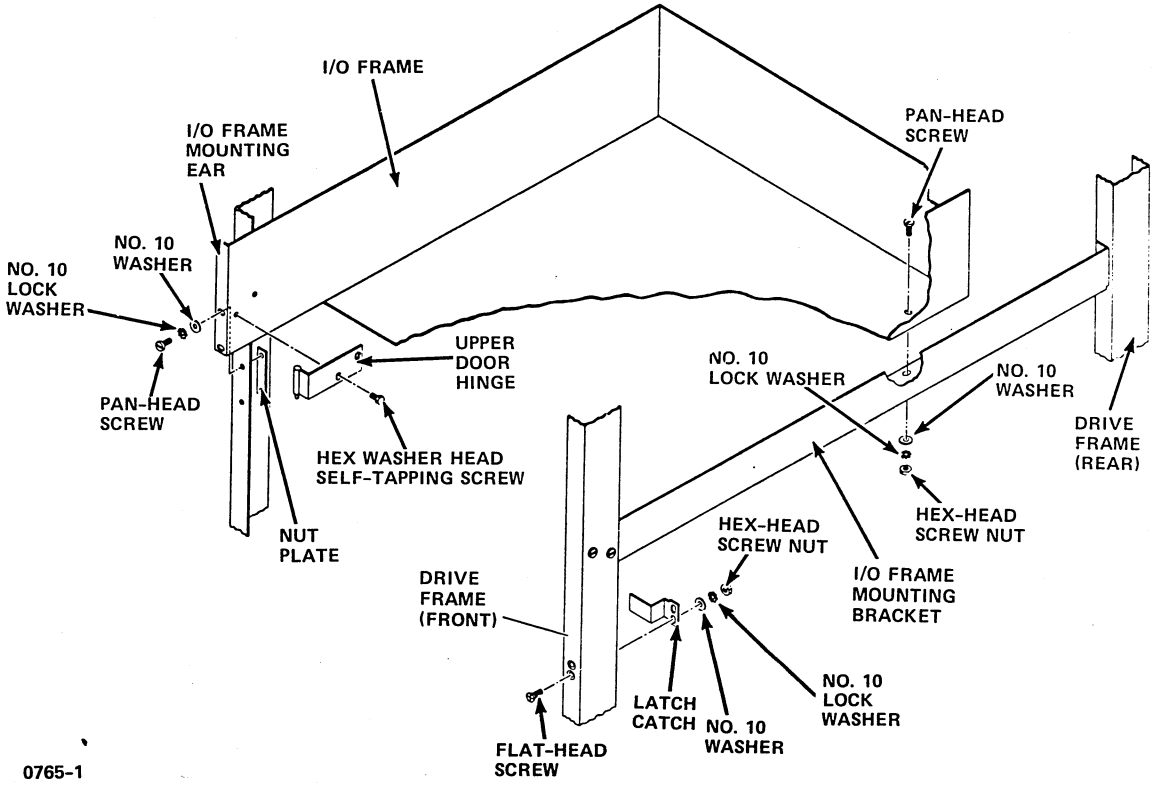

Figure 10-19. Controller Installation

7. Position the controller until the holes in the controller I/O frame are aligned with the holes in the I/O frame mounting brackets. Install the screws, nuts, and washers (figure 10-19).

8. Install the nut plates (figure 10-19), thus securing the front of the controller I/O frame.

NOTE

Step 8 provides hardware installation procedures for the BJ701 Module Drive Cabinet. The BU281 Cabinet has latch strikes and shoulder screws already installed for controller installation.

9. Ensure that the controller is resting approximately parallel with the front/rear axis of the drive cabinet; then tighten the screws installed during the preceding two steps.

10. For the BJ701 only, install the front door latch catch (figure 10-19). Note that this is not the same latch catch removed in step 3 of BJ701 Module Drive Cabinet Preparation.

11. Attach the upper door hinge (figure 10-19) to the I/O frame. Note that this is not the same hinge removed in step 2 of BJ701 Module Drive Cabinet Preparation.

NOTE

It may be necessary to loosen the upper and lower hinges to perform step 12.

12. Install the front door (using the release pin saved from step 2b of BJ701 Module Drive Cabinet Preparation) so that the lower edge of the door is aligned with the lower edge of the side panels.

13. Attach the ground strap to the front door using the strap and hardware from step 2a of BJ701 Module Drive Cabinet Preparation.

POWER CHECKS

These checks ensure that the control unit power supply circuits are providing the correct power for the fans and logic.

1. Connect the power input cable to the site main power source.

NOTE

Refer to figure 10-4 while performing the following.

2. Close the main power circuit breaker (A1CB1), and ensure that the following conditions exist.

   a. The fans are rotating.

   b. The POWER ON indicator, located on the front panel, is illuminated.

   c. The ±5 V indicators, located on the maintenance panel, are illuminated.

3. If no indicators are illuminated, press power reset circuit breakers A4CB1 and A4CB2.

4. Check the +5 V as follows:

   a. Monitor pin 62A (of any card position) on the back panel for +5.0 ±0.05 V. If the voltage exceeds this tolerance, adjust it as instructed in step 4b.

   b. Adjust the +5 V adjust potentiometer on the +5 V regulator until the voltage is correct.

5. Check the -5 V as follows:

   a. Monitor pin 02A (of any card position) on the back panel for -5.0 ±0.05 V. If the voltage exceeds this tolerance, adjust it as instructed in step 5b.

   b. Adjust the -5 V adjust potentiometer on the -5 V regulator until the voltage is correct.

SIGNAL CABLING

Each module drive is connected to the module drive control unit via two cables. These are designated the A cable and the B cable. (Refer to table 10-1 for pin assignments).

The B cable always connects directly to the control unit. However, if the subsystem includes more than one drive, the A cables are daisy-chain connected as shown in figures 10-1 and 10-2. In this case, only the A cable of the first drive in the chain connects directly to the control unit; the other A cables connect via the daisy chain. The last drive in the chain is left with an extra A cable connector, which is terminated with the terminator supplied with the control unit.

TABLE 10-1. MODULE DRIVE I/O CONNECTOR PIN ASSIGNMENTS

Cable A (J3)		Cable A (J3) (Contd)		Cable B (J2,J4†)	
Pins	Function	Pins	Function	Pins	Function
1,4	Tag gate out	34,37	Bus out bit 5	A,B,C††	Read/write data
2,5	Tag gate in	35,38	Bus out bit 6	H,J,E††	Write clock
3,7	Bus in bit 1	36,39	Bus out bit 7	M,N,K	Servo clock
8,12	Bus in bit 4	40,43	Not used	AA,CC††	Seek end
10,13	Index	41,44	Not used	BB,DD	Module addressed
11,14	Bus in bit 7	42,45	Bus in bit 0	EE,HH	Interrupt
15,18	Bus in bit 2	46,49	Tag 1 (2^0)		
16,20	Bus in bit 5	48,51	Tag 2 (2^1)		
17,21	Bus in bit 3	52,55	Tag 3 (2^2)		
22,25	Module select hold	53,54	Not used		
23,26	Bus out bit 0	56 through 73,76†††	Not used		
24,27	Bus out bit 1	74,77	Sector		
28,31	Bus out bit 2	75,78	Bus in bit 6		
29,32	Bus out bit 3	73	Sequence Power††††		
30,33	Bus out bit 4	76	Sequence Power††††		

†J4 installed on daisy-chain option

††Shield ground

†††Applies to the BJ701 only

††††Applies to the BJ402 only

Signal Cable Installation

Figure 10-20 illustrates the bus in and bus out interface cable connections between the module drive interface board and the control unit. To complete installation of the signal cables, proceed as follows. (Refer to figure 10-20):

1. Connect the cable interface or adapter paddleboard to the processor backplane. Refer to section 1 for assigned slot position. Observe the starting and ending pin numbers on the cable interface or adapter paddleboard and ensure that the interface or adapter paddleboard is inserted over these pins on the backplane.

2. Connect the module drive cables to the interface or adapter paddleboard by plugging the cable connector into the desired channel socket.

3. Attach the signal cable shield to the processor cabinet at the bottom entry point. The necessary U-bolts are included with the cable assembly. More than one cable may occupy each U-bolt.

4. Route the signal cable out of the cabinet through the bottom cable access point and along the floor to the rear of the cabinet.

5. Continue routing the signal cable to its assigned peripheral and secure the cable to the peripheral connector.

6. GB138-A controller interrupt connection is made at backplane pin 249 of the slot occupied by the controller.

7. GB145-A controller interrupt is to be installed on J6-1 of the paddleboard. (Refer to section 20 to define interrupt assignment.)

MODULE DRIVE SECTOR PLUG

The number of sector pulses generated by the drive for each revolution of the disk pack depends on the configuration of its sector plug. This plug is installed on the logic backplane at card location A03, and its terminals have a one-to-one correspondence with the backplane pins. This means that terminal 1A on the plug connects to pin 1A on the back plane and so forth.

The plug furnishes preset inputs to the drive's sector counter. The drive comes from the factory with its sector plug prewired for 64 sectors. If a different number of sectors is needed, the plug must be rewired. Refer to the hardware maintenance manual of the unit to be installed.

MODULE DRIVE GROUNDING

Each drive must be properly grounded to ensure safe and satisfactory operation. To be properly grounded, the drive must have two ground connections: a site ac power system safety ground and a system ground. Both of these are explained in the following text.

Site Power System Safety Ground

The site ac power system safety ground is provided by the green wire (or green with yellow stripes) in the ac power cord. This wire connects to the drive frame and goes through the ac power cord to earth ground via the ac branch circuit supplying the drive. Also, all power receptacles in the vicinity of the drive must be at the same ground potential as the drive.

System Ground

The power system safety ground does not necessarily satisfy all system grounding requirements. Therefore, additional connections to earth ground are required to ensure proper drive and system operation. This is referred to as the system ground. The system ground can connect to earth using any of the following methods:

- Floor grid (grounded) - The drives and controller are connected to a floor grid consisting of horizontal and vertical members which are mechanically secured and have ground straps or an equivalent joining them. The ground straps ensure a constant ground potential at all points on the grid. This grid is located under a false floor and connects directly to earth ground.

- Floor Grid (not grounded) - The drives and controller are connected to a floor grid that is isolated from earth ground. To ground the grid, the controller is connected to earth ground.

NOTE

The daisy chain method of grounding the system is not recommended in systems with more than ten separate equipments.

- Daisy chain - Drive ground terminals are connected in a daisy chain to one another and then to the controller, which connects to earth ground.

I/O Cables

In laying out the site, consideration must be given to the routing of I/O cables. The drive connects to the controller via two I/O cables which are designated as the A cable and the B cable.

The I/O cables connect to the controller in a daisy-chain configuration. Figures 10-1 and 10-2 show this configuration.

The daisy-chain configuration requires that the B cable go directly from each drive to the controller. However, only the first drive in the chain requires an A cable directly to the controller. The others are connected via the daisy chain. In the daisy-chain configuration, only the last drive in the chain has an A cable terminator assembly.

Both the I/O cables and terminators are provided with each drive and control unit. Table 10-2 lists the part numbers of the terminators and the various available lengths of I/O cables. Tables 10-3 and 10-4 list the pin assignments for the I/O connectors.

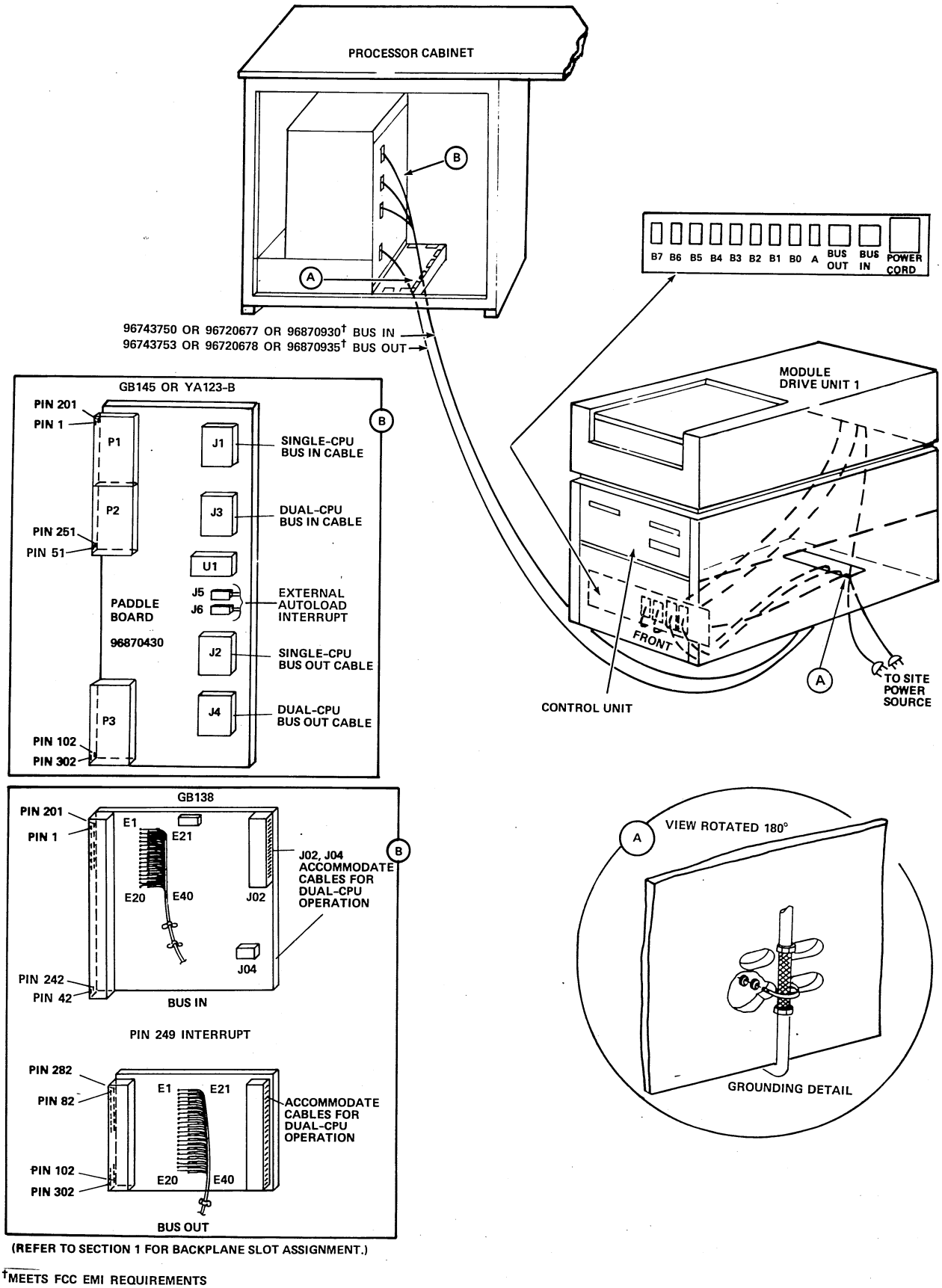

(REFER TO SECTION 1 FOR BACKPLANE SLOT ASSIGNMENT.)

†MEETS FCC EMI REQUIREMENTS

0390-3

Figure 10-20. CYBER 18 Module Drive Signal and Power Connections

TABLE 10-2. MODULE DRIVE I/O CABLE INSTALLATION ACCESSORIES

Cable Length	Cable Type and Part Number †			
	A Cable (Unshielded)	A Cable (Shielded) ††	B Cable (Unshielded)	B Cable (Shielded) ††
9 in (228.6 mm)		77569700		
4 ft (1.22 M)		77569701		
5 ft (1.53 M)		77569702	75241300	47201700
6 ft (1.83 M)	40020500			
8 ft (2.44 M)	40020504			
10 ft (3.05 M)	40020505	77569703	75241301	47201701
15 ft (4.58 M)	40020507	77569704	75241302	47201702
20 ft (6.10 M)	40020508	77569705	75241303	47201703
25 ft (7.63 M)	40020501	77569706	75241313	47201713
30 ft (9.16 M)	40020509	77569707	75241304	47201704
35 ft (10.7 M)		77569708	75241314	47201714
40 ft (12.2 M)	40020510	77569709	75241305	47201705
45 ft (13.8 M)		77569710	75241315	47201715
50 ft (15.3 M)	40020502	77569711	75241306	47201706
55 ft (16.8 M)		77569712	75241316	47201716
60 ft (18.3 M)	40020511	77569713	75241307	47201707
65 ft (19.9 M)			75241317	47201717
70 ft (21.4 M)	40020512	77569714	75241308	47201708
75 ft (22.9 M)			75241309	47201709
80 ft (24.5 M)			75241310	47201710
90 ft (27.5 M)			75241311	47201711
100 ft (30.5 M)			75241312	47201712

† The I/O plug terminator part number is 40067209.

†† Preferred Part. Required for FCC compliance.

TABLE 10-3. MODULE DRIVE A CABLE I/O CONNECTOR PIN ASSIGNMENTS

Pins†	J3, J4 Functions	Pins†	J3, J4 Functions	Pins†	J3, J4 Functions
22,25	Drive select hold	74,77	Sector	40,43	Spare
1, 4	Tag gate out	10,13	Index	41,44	Spare
46,49	Tag 2^0	2, 5	Tag gate in	47,50	Spare
48,51	Tag 2^1	42,45	Bus in bit 0	53,56	Spare
52,55	Tag 2^2	3, 7	Bus in bit 1	54,57	Spare
23,26	Bus out bit 0	15,18	Bus in bit 2	58,62	Spare
24,27	Bus out bit 1	17,21	Bus in bit 3	59,63	Spare
28,31	Bus out bit 2	8,12	Bus in bit 4	60,64	Spare
29,32	Bus out bit 3	16,20	Bus in bit 5	65,70	Spare
30,33	Bus out bit 4	75,78	Bus in bit 6	66,71	Spare
34,37	Bus out bit 5	11,14	Bus in bit 7	67,72	Spare
35,38	Bus out bit 6	73	Sequence power	80	GND††
36,39	Bus out bit 7	76	Sequence power		

†I/O connector pins without corresponding wires in cable are not listed. (Exceptions are noted.)

††Available at I/O connector but does not have corresponding wire in cable.

TABLE 10-4. MODULE DRIVE B CABLE I/O CONNECTOR PIN ASSIGNMENTS

Pins†	J2 Functions	Pins†	J2 Functions	Pins†	J2 Functions
A,B	Read/write data	K	Servo clock shield	EE,HH	Interrupt
D	Read/write data shield	W,X	Read clock††	U,V	Spare
H,J	Write clock	Y	Read clock shield††	T	Spare
E	Write clock shield	AA,CC	Seek end	FF,JJ	Spare
M,N	Servo clock	BB,DD	Module address	MM	-5 V for tester†††

†I/O connector pins without corresponding wires in cable are not listed. (Exceptions are noted.)

††Applicable only to drives with RD PLO/DATA SEPARATOR option.

†††Available at I/O connector but does not have correponding wire in cable.

INSTALLATION

The following procedures describe the actual installation of the BJ402 and BJ701 module drives. These procedures assume that the requirements previously discussed have been met.

All procedures are listed below and, in general, should be considered in the order they are presented. However, this order may have to be varied somewhat to meet the requirements of specific installations.

- Preinstallation inspection
- Ground strap installation
- Power cable routing
- I/O cable installation

Preinstallation Inspection

Perform the following inspection prior to installing the drive.

1. Inspect the drive for possible shipping damage. Any claim for this type of damage should be filed promptly with the transporter involved. If a claim is filed, save the original shipping materials.
2. Verify that all logic cards are firmly seated in the logic chassis and power supply.
3. Verify that all connectors are firmly seated.
4. Verify that the control panel is firmly seated in the shroud.
5. Verify that all cabling is intact and that there are no broken or damaged wires.
6. Check the entire drive for the presence of foreign material that might cause an electrical short.
7. Check the actuator and pack area for the presence of material that might obstruct movement of carriage and heads.

Grounding

The following procedures describe the previously discussed methods of grounding the drive.

Drive-to-Floor Grid Grounding

If a floor grid is available (either grounded or ungrounded), each drive is individually connected to the floor grid as follows. (Refer to figure 10-21 for a grounding illustration and to table 10-5 for grounding accessories).

TABLE 10-5. GROUNDING ACCESSORIES

Part	Part Number
Flat braided shielding	93267009, 50 ft (15.2 M)
Terminal lug	40125601
Lock washer, external tooth, no. 10	10126403
Screw, cross recessed, pan head, 10-32x1/2	17901524

1. Crimp and solder a terminal lug to one end of a length of flat braided shielding.
2. Connect the terminal lug to the ac terminal of the grounding block (refer to figure 10-22).
3. Route the free end of the braid strap through the I/O cable guide and into the cutout in the floor.

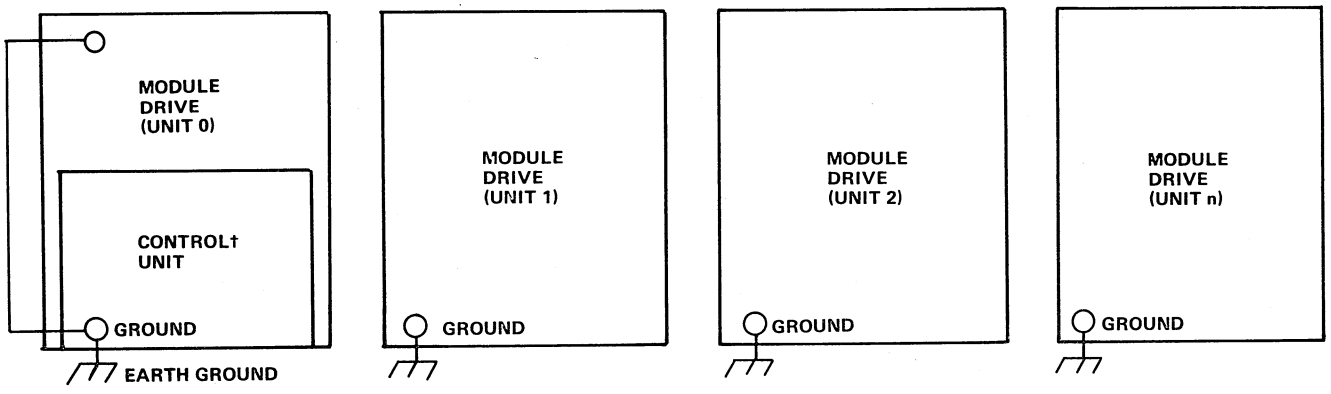

Figure 10-21. Floor Grid System Grounding

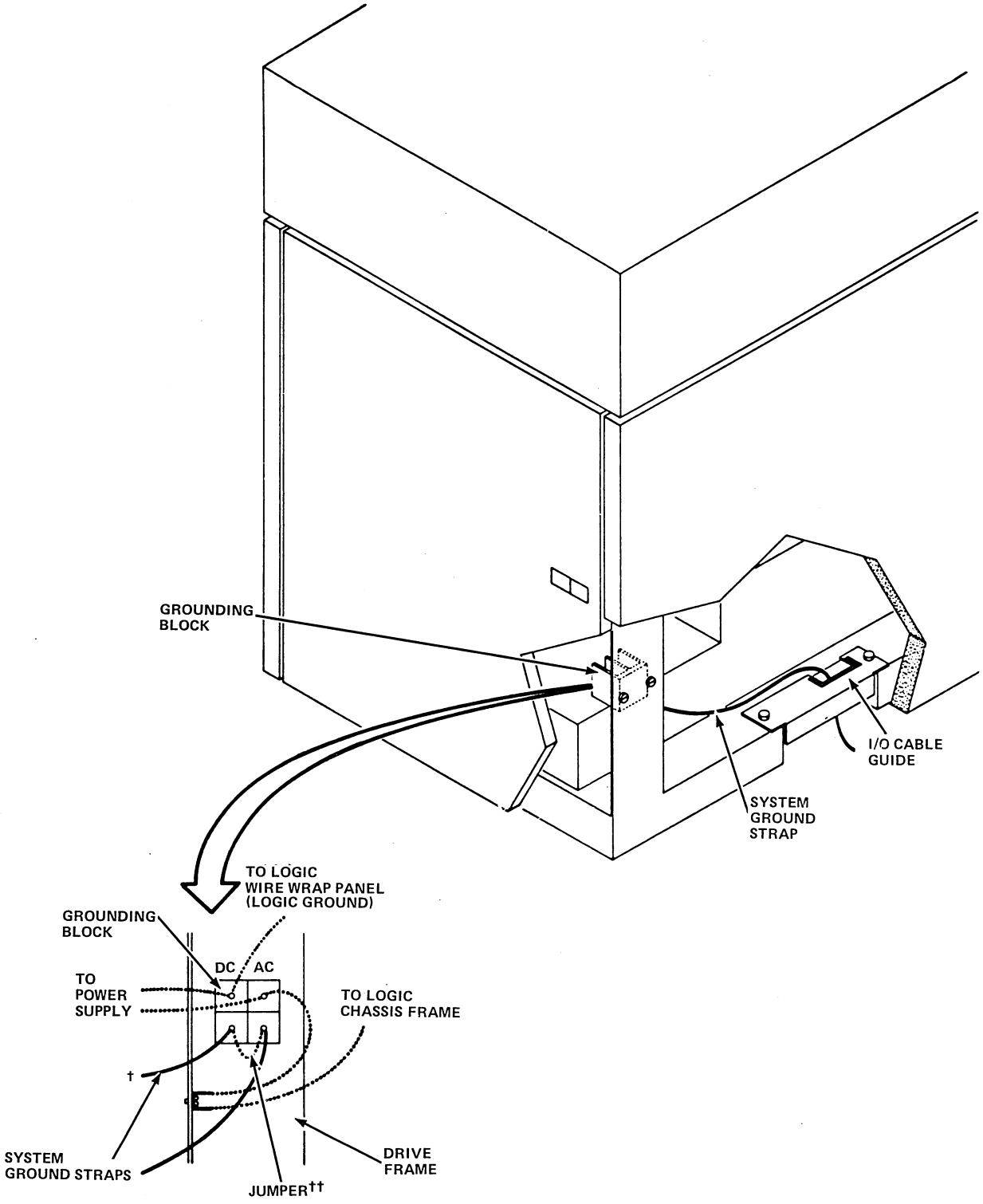

†APPLICABLE ONLY WHEN DRIVE HAS ISOLATED AC AND DC GROUNDS (JUMPER IS REMOVED)
††JUMPER IS REMOVED TO ISOLATE AC AND DC GROUNDS
1902

Figure 10-22. BJ402 Module Drive Grounding Block

4. Cut the strap to the proper length; attach the terminal lug to the free end, as done in step 2.

5. Drill an 11/32-inch (8.7-millimeter) hole in the floor grid.

6. Secure a terminal lug to the grid using a 10-32x1/2 screw and a number 10 external tooth lockwasher.

7. If the grid is not connected directly to the earth ground, connect it to the earth ground via the controller.

NOTE

The system ground must connect both the drive dc (logic) and ac (frame) ground to earth. In most installations, the drives ac and dc grounds are tied together by a jumper wire (refer to figure 10-22); only one system ground connection is required. However, some installations may require the ac and dc grounds to be isolated. In these cases, the jumper must be removed and both ac and dc grounds must connect to earth via separate system ground connections. Perform steps 8 and 9 only if the drive is to have isolated ac and dc grounds.

8. Remove the jumper wire between the ac and dc portions of the grounding block (figure 10-22).

9. Perform steps 1 through 6. When performing step 2, connect the ground strap to the dc terminal of the grounding block instead of the ac terminal.

Daisy-Chain Grounding

If a floor grid is not available, all drives must be connected to the controller in a daisy-chain grounding configuration (refer to figure 10-23). The controller then must be connected to earth ground. When connected in this configuration, the drive must have a common ac and dc ground. Therefore, the jumper on the grounding block must be connected (figure 10-22). The following describes this procedure (refer to table 10-5 for grounding accessories):

1. Cut lengths of flat braided shielding to the lengths required to go from drive to drive, from the last drive in the chain to the controller, and from the controller to earth ground.

2. Crimp and solder a terminal lug to the ends of each strap.

3. Connect two straps to an ac terminal of the grounding block; then route the straps through the I/O cable guide, and connect one strap to each of the two closest drives.

4. Ensure that the following conditions exist:

   a. All drives and the controller are connected in a daisy chain.

   b. The drive closest to the controller is connected to the controller.

   c. The controller is connected to earth ground.

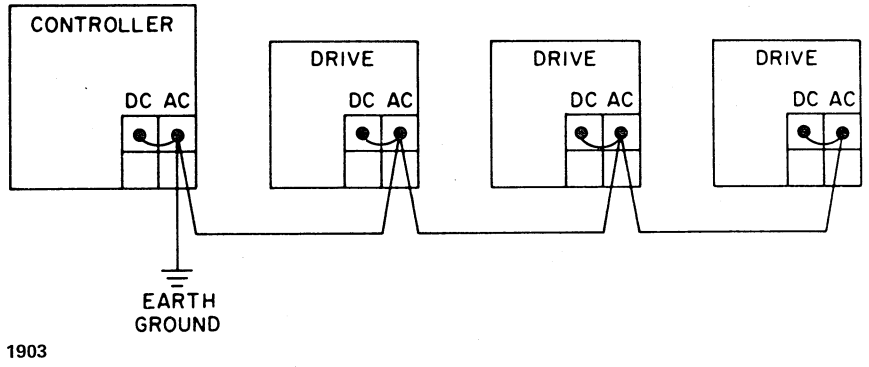

Figure 10-23. Daisy-Chain System Grounding

Power Cable Routing

BJ402 Unit

The drive's power cable is routed and connected as follows (refer to figure 10-24).

1. Remove the two screws securing the cable guide to the frame, and remove the cable guide.

WARNING

Ensure that the MAIN AC circuit breaker is set to the off position when connecting the power cable.

2. Route the power cable through the cable guide, and connect it to the power receptacle.
3. Position the cable guide on the frame, and secure it with the two screws.
4. Connect the support spring to the power cable.
5. Connect the power cord connector to the site power source connection.

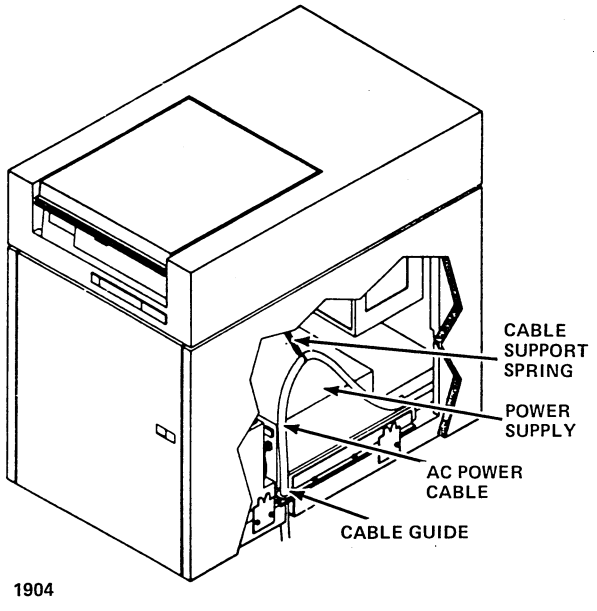

Figure 10-24. BJ402 Module Drive Power Cable Routing

BJ701 Unit

The power cable for the BJ701 is routed out of the drive cabinet as shown in figure 10-25.

I/O Cable Installation

BJ402 Unit

This procedure describes the installation of drive I/O cables and terminators. It assumes that the person performing the installation is familiar with the information presented in I/O Cables earlier in this section.

1. Remove power from the drive by setting the MAIN AC circuit breaker to the off position.
2. Remove the left side panel.
3. Remove the two screws securing the I/O cable guide (figures 10-26), and remove the guide.

NOTE

All cables installed in the following steps are routed through the I/O cable cutout (the opening left by the removal of cable guide). Also, some systems may require that specific connectors on the controller relate to specific physical drives. Consult the controller manual for information relating to I/O connections.

4. Connect the B cable between the controller and drive connector J2.

NOTE

Steps 5 through 9 apply only to systems using a daisy-chain I/O cabling configuration.

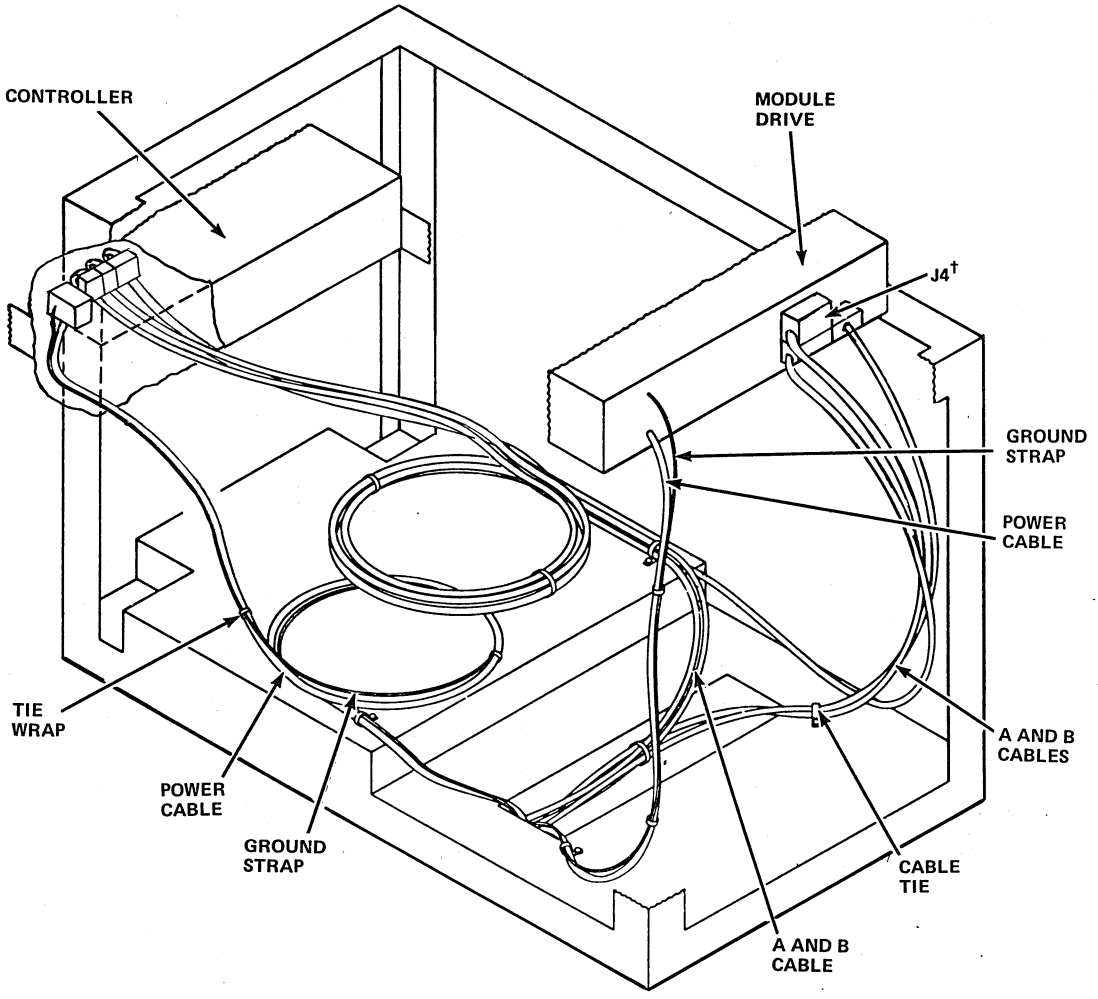

†REPLACED BY TERMINATOR IF IT IS LAST DRIVE IN DAISY CHAIN.

2010

Figure 10-25. BJ701 Basic Cable Routing with Drawer Mount

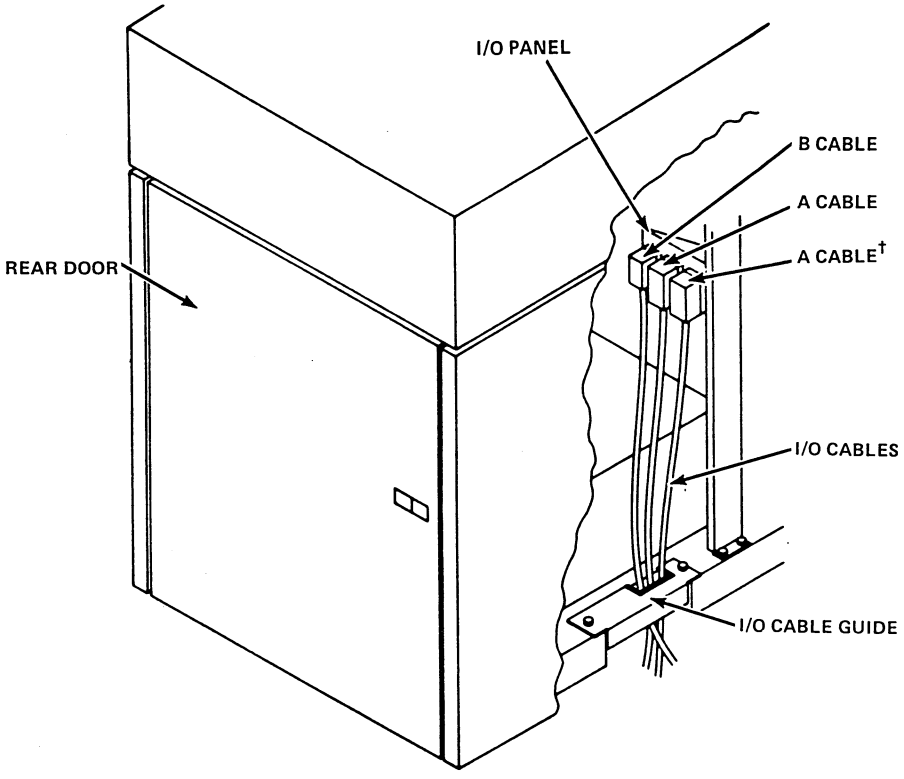

†THE J4 CABLE IS REPLACED BY A TERMINATOR IF IT IS STAR CONNECTED OR THE LAST DRIVE IN THE DAISY CHAIN.

1905

Figure 10-26. BJ402 Module Drive I/O Signal Cable Routing

5. Connect the A cable from the controller or connector J4 on the upstream drive (the drive that is closer to the controller on a daisy chain) to drive connector J3.

NOTE

If the drive is not the last in a daisy chain, perform step 6. If the drive is the last in a daisy chain, perform step 7.

6. Connect another A cable from drive connector J4 to down-stream drive connector J3. Return to step 7.

7. Install the terminator on J4.

8. Replace the I/O cable guide, ensuring that the cables are routed as shown in figure 10-26.

9. Replace the left side panel.

BJ701 Unit

1. Open the drive top cover (refer to figure 10-27)

2. Install the A and B cable to the drive (mounted above the controller) as shown in figures 10-25 and 10-27.

3. Close the drive cover.

INITIAL CHECKOUT AND STARTUP

This procedure assumes that all preceding procedures have been completed. Before performing this procedure, become familiar with all preventive maintenance procedures, safety precautions, maintenance preliminary conditions, and all operating instructions in the hardware reference manual.

1. Set the ac and dc power circuit breakers to OFF.

2. Remove dust or dirt from the interior of the shroud and cabinet per the Clean Shroud and Spindle procedure in the hardware maintenance manual.

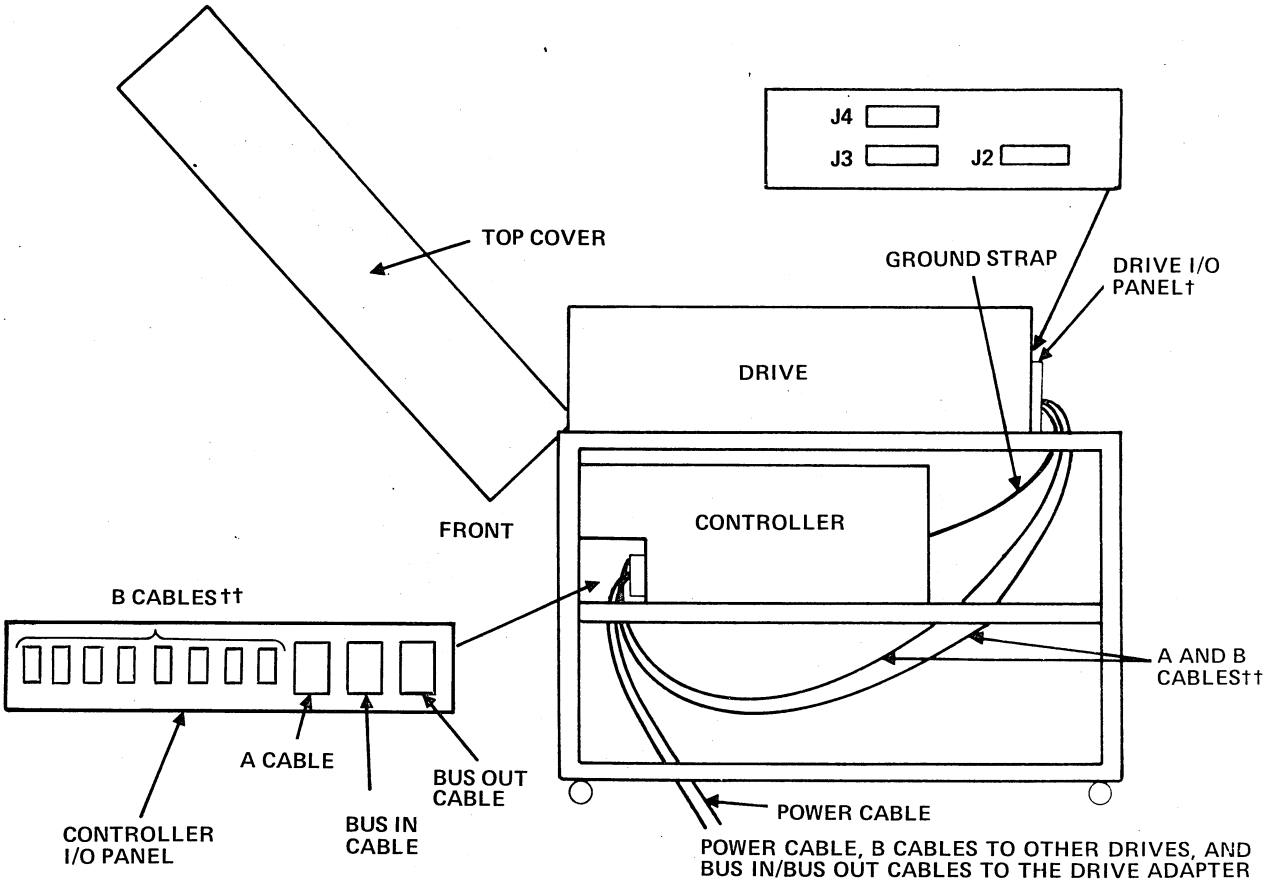

†NOTE THAT THE A CABLE SHOULD BE PLUGGED INTO THE CONTROLLER FIRST TO ENSURE PROPER ORIENTATION AT THE DRIVE I/O PANEL.

††THESE CABLES HAVE RIGHT ANGLE CONNECTORS.

0387-2

Figure 10-27. BJ701 Module Drive I/O Signal Cable Routing

3. Open the cabinet top cover.
4. Remove the logic chassis card cover.
5. Verify that all logic chassis cards are firmly seated in their connectors.
6. Install the logic chassis card cover.
7. Verify that the drive is connected to the external power source and that the external circuit breaker (if any) is ON.
8. Turn on the ac circuit breaker. The main blower motor then starts.
9. Set the front panel start switch to OFF.
10. Open the top cover from the rear.
11. Remove the black voice coil wire.
12. Turn on the POWER SUPPLY circuit breaker. The logic fan starts.
13. Install a clean scratch pack as directed in the applicable procedure in the module drive hardware reference manual.

14. Press the START switch. Observe the following:

    a. The start indicator illuminates.

    b. The spindle motor starts.

    Purge the unit in this mode for 10 minutes.

15. Stop the unit, and turn off the power supply circuit breaker.

16. Replace the voice coil wire.

17. Turn on the power supply circuit breaker.

18. Press the START switch. Observe the following:

    a. The START indicator illuminates.

    b. The spindle motor starts.

    c. The heads load.

CAUTION

If the FAULT indicator illuminates, power-down the unit and have a qualified customer engineer inspect the heads and the disk pack for damage.

DIAGNOSTIC TESTING

Perform the manual operating and diagnostic checks in accordance with the diagnostic decision logic tables described in the system hardware maintenance manual.

NOTE

The diagnostic tests and routines described in the system hardware maintenance manual can be performed only after the console display, processor, and flexible disk drive or tape cassette (diagnostic load device) installations have been completed.

Perform the head arm alignment if necessary according to the field repair guide using the ODS utility, SMDUT.

BZ403 MINI-MODULE DRIVE

The BZ403 Mini-Module Drive is a peripheral storage device that has a fixed rotating disk with both moving and fixed head capability. The moving head storage has formatted capacity of 15.7 million bytes, and the fixed head storage has a formated capacity of 589K bytes. The unit comes with the capacity to mount into a 19-inch (483-millimeter) rack (figure 10-28); but it may be housed in a tabletop-height cabinet (figure 10-29), which may also contain the control unit (figure 10-30).

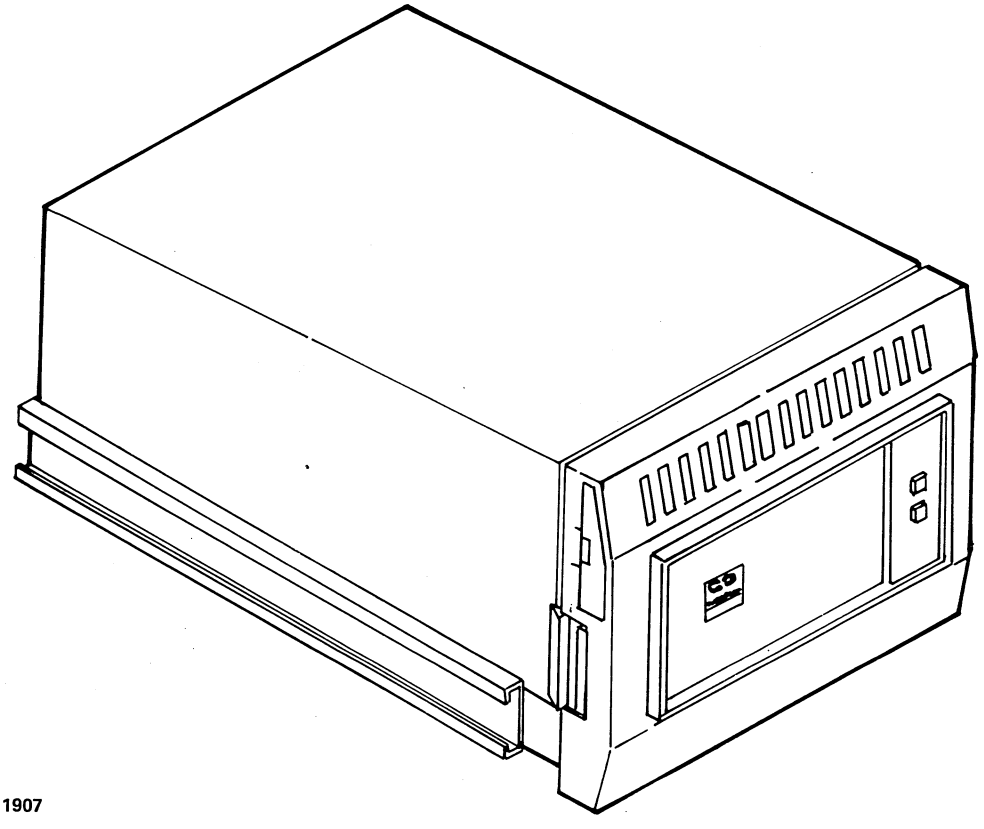

1907

Figure 10-28. BZ403 Mini-Module Drive

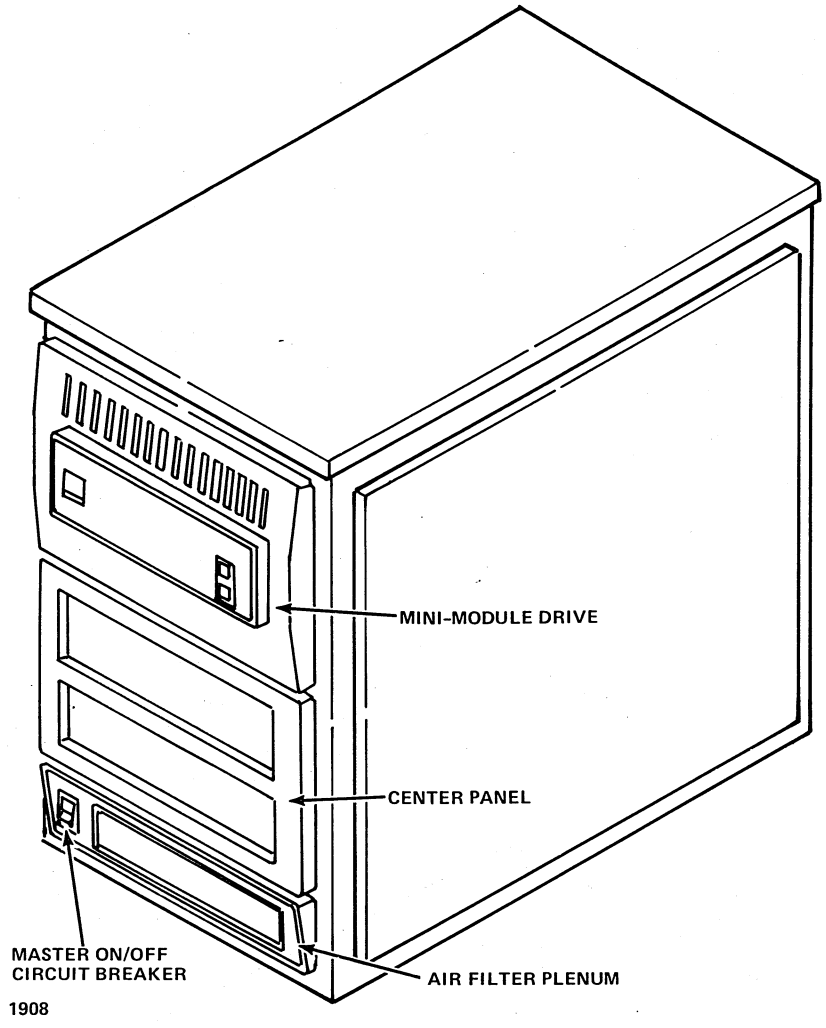

Figure 10-29. BU281 Mass-Storage Cabinet with Mini-Module Drive Installed

The mini-module drive is designed to function as a small, independent memory system or as part of a disk memory subsystem. When connected in a daisy-chain string, the first drive in the string provides the controller and sequence power functions (that is, it must interface totally with the storage control unit). All signal cables enter the first drive and are daisy chained to the remaining drives. Power is supplied to each drive and is not daisy chained. The power-sequence control signals are daisy chained from one drive to the next.

UNPACKAGING

1. Open the package, and save all the packaging material.
2. If the mini-module drive unit has a slide mount option, remove the packages containing the two slide mounts.
3. Remove the drive belt from the plastic bag.
4. Remove the plastic dust cover from around the mini-module drive unit.
5. Check all items against the shipping bill for the equipment and hardware required to complete the installation. Discrepancies, missing items, damaged equipment, and so forth, should be reported to the CDC account sales representative responsible for the equipment.

After removing the shipping packaging according to the unpackaging instructions provided with the unit, inspect for shipping damage and perform the final unpackaging procedures. Most packaging materials can be reused if it is necessary to reship the drive at some future date. To obtain packaging instructions, contact the packaging engineer at the following address:

Packaging Engineer, Material Services Dept.
Normandale Division, MPI
7801 Computer Ave.
Minneapolis, MN 55435

When ordering packaging instructions, specify the exact equipment number and series code of the drive as shown on the equipment identification label.

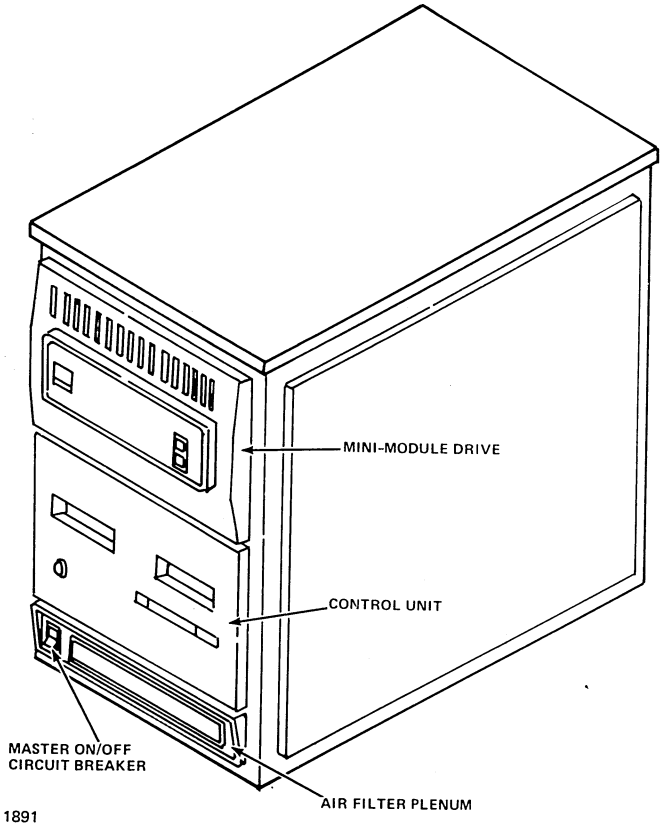

Figure 10-30. BU281 Mass-Storage Cabinet with Mini-Module Drive and Control Unit Installed

INSPECTION

While performing the installation procedures, inspect all components of the unit for possible shipping damage. All claims for this type of damage should be filed with the carrier involved.

INSTALLATION

The mini-module drive can be slide-mounted onto a 19-inch (483-millimeter) rack. The slide is available as an option and is furnished upon customer request. Figure 10-31 shows the BU281 Mass-Storage Cabinet 19-inch (483-millimeter) rack with the mini-module drive installed using the necessary hardware. Figure 10-32 shows the mounting hardware for the mini-module drive.

Mounting Rack

NOTE

Two people are required to perform step 5 of the following procedure.

1. Disassemble the j-bracket and the slide assembly, which come assembled together. See figure 10-32.
   a. Loosen the slide bracket catch.
   b. Extend the slide and j-bracket.
   c. Slide the j-bracket forward and out from under j-bracket catch on the slide assembly.
2. Mount the j-brackets onto the mini-module drive cabinet using four screws for each bracket, as shown in figure 10-32.
3. Mount the slide assembly to the 19-inch (483-millimeter) slide mounting brackets with four screws for each side of the rack, ensuring that both slide assemblies are mounted at the same level in the rack.
4. Install two latch brackets onto the 19-inch (483-millimeter) rack on each side of the mini-module drive and above the slide assembly. Allow enough space above the slide assembly for the slide action to clear the latch bracket.
5. Extend the slide assembly full length and place the mini-module drive with j-brackets onto the slide assembly, ensuring that the j-brackets fit under the j-bracket catches at the rear of the slide assemblies.
6. Tighten the slide bracket catches at the front of the j-bracket to hold the slide assembly in place.
7. At the bottom of the drive, loosen the three Phillips-head screws and remove one screw at the back of the cover. Slide the cover so that the three Phillips-head screws fall through the cover slots. Remove the bottom cover by dropping it straight down (figure 10-33).
8. At the top of the drive, take out the ten socket-head screws and remove the top cover (figure 10-33).
9. Unlock the drive motor by removing the Phillips-head screw at the side of the motor. Allow the motor to slide to the rear of the drive.

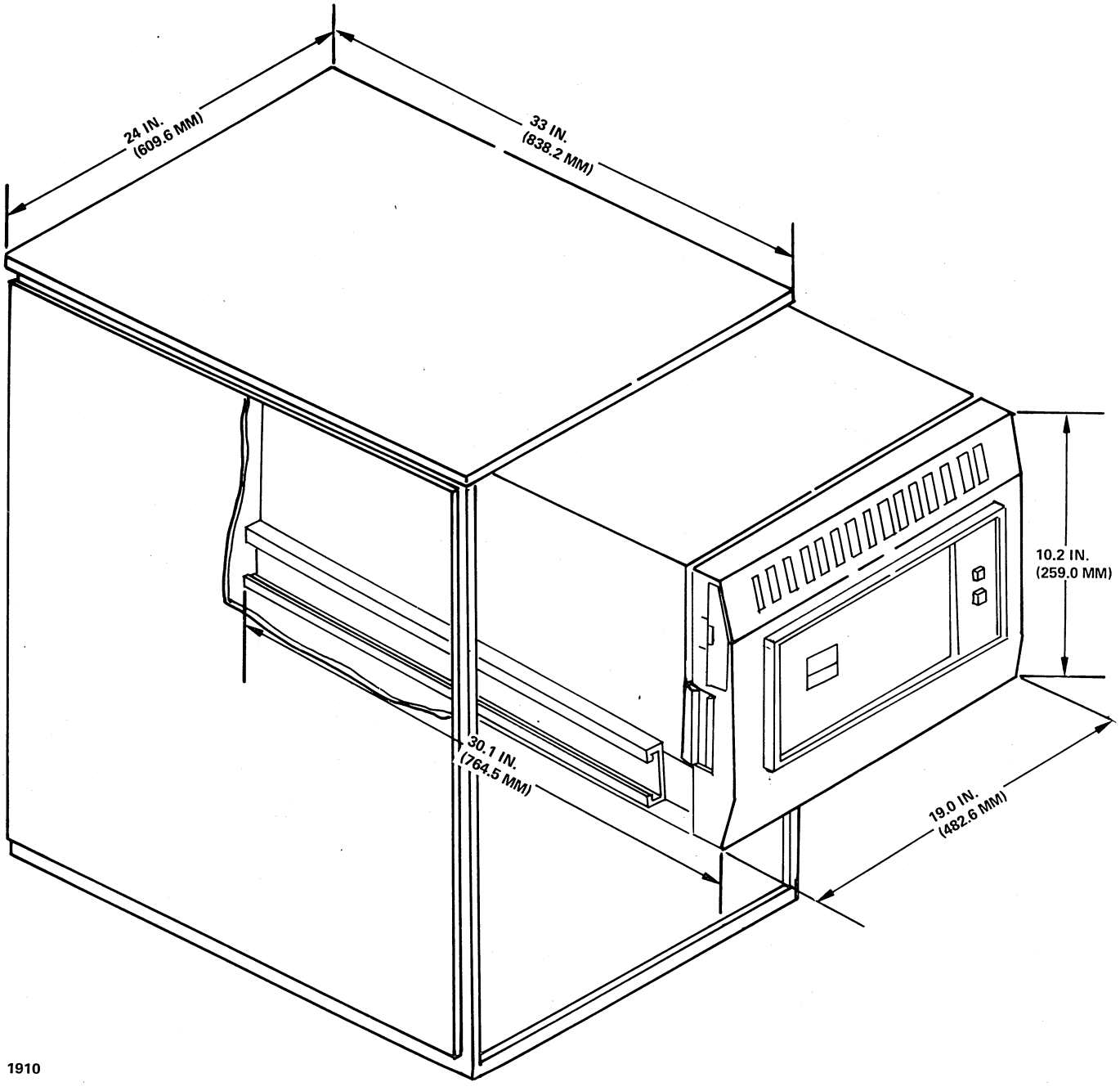

Figure 10-31. Mini-Module Drive Space Requirements

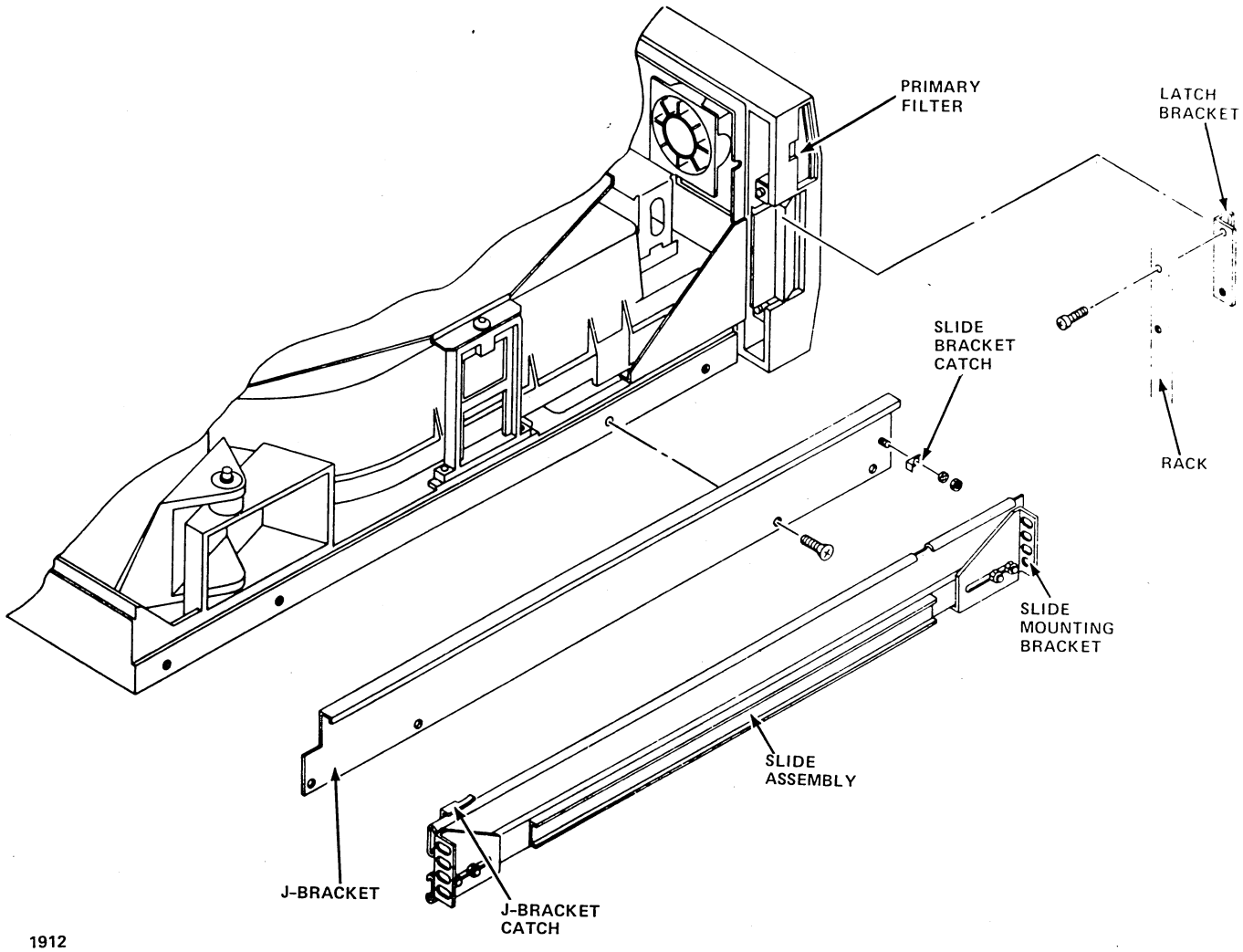

Figure 10-32. Mini-Module Drive Installation

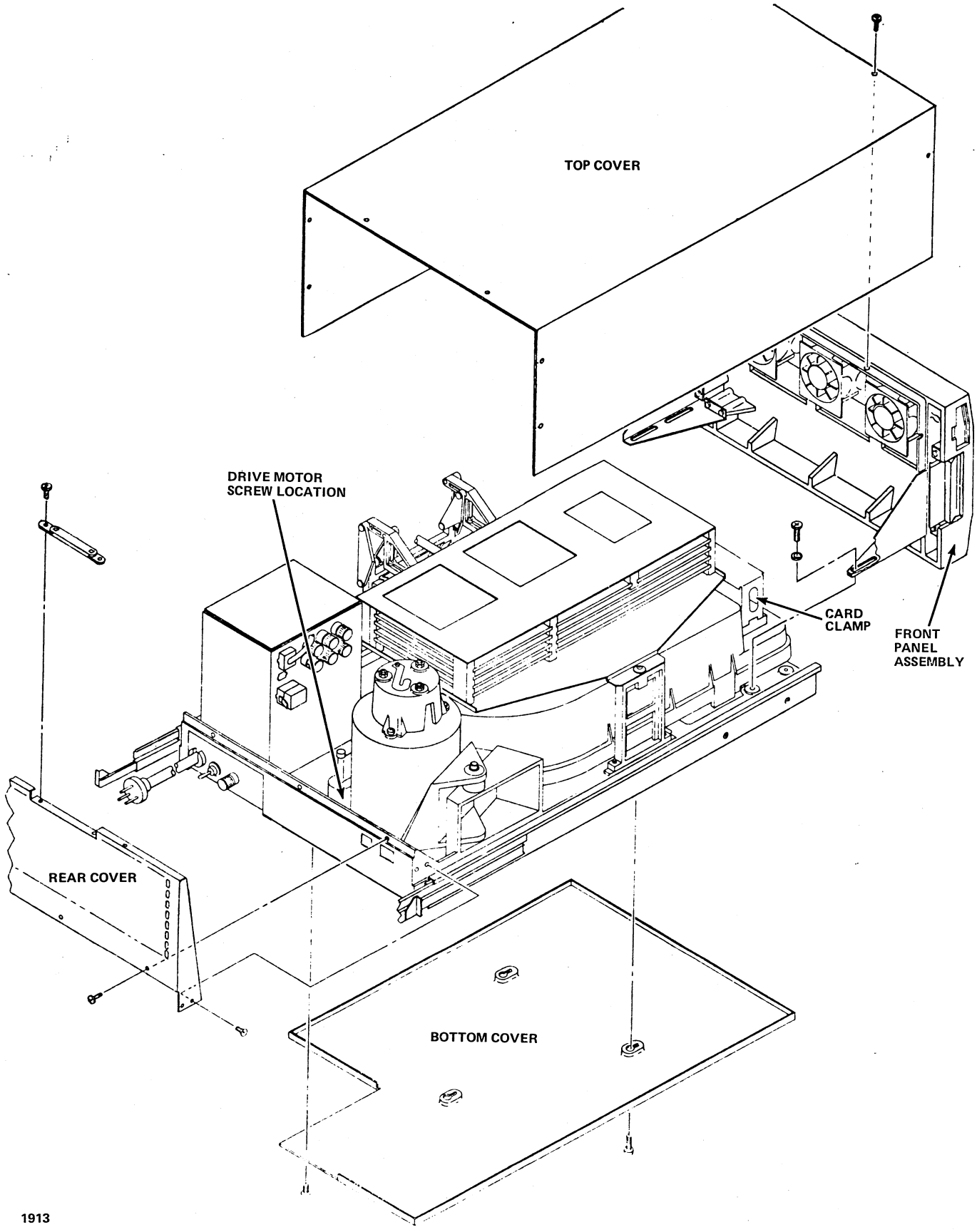

Figure 10-33. Final Assembly

10. Remove the drive belt from a plastic bag, and perform the belt installation procedure as follows:

    a. Force the drive motor pulley toward the spindle pully to loosen the belt tension (figure 10-34).

    b. Place the drive belt over the drive motor pulley with the smooth side of the belt toward the pulley.

    c. Force the drive motor pulley toward the spindle pulley until the drive belt can be placed around the spindle pulley. Align the drive belt in the center of both pulleys, and release the force.

11. Unlock the actuator by placing the rotary positioner arm lock actuator on the underside of the mini-module drive in the off position (figure 10-35).

12. Unlock the spindle by loosening two Phillips-head screws on the spindle lock and ground spring on the underside of the mini-module drive (figure 10-35). Slide the spindle lock and ground spring back as far as it will go and still allow the ground spring cup to rest in the middle of the spindle shaft.

13. Tighten the two Phillips-head screws to hold the spindle lock and ground spring in position.

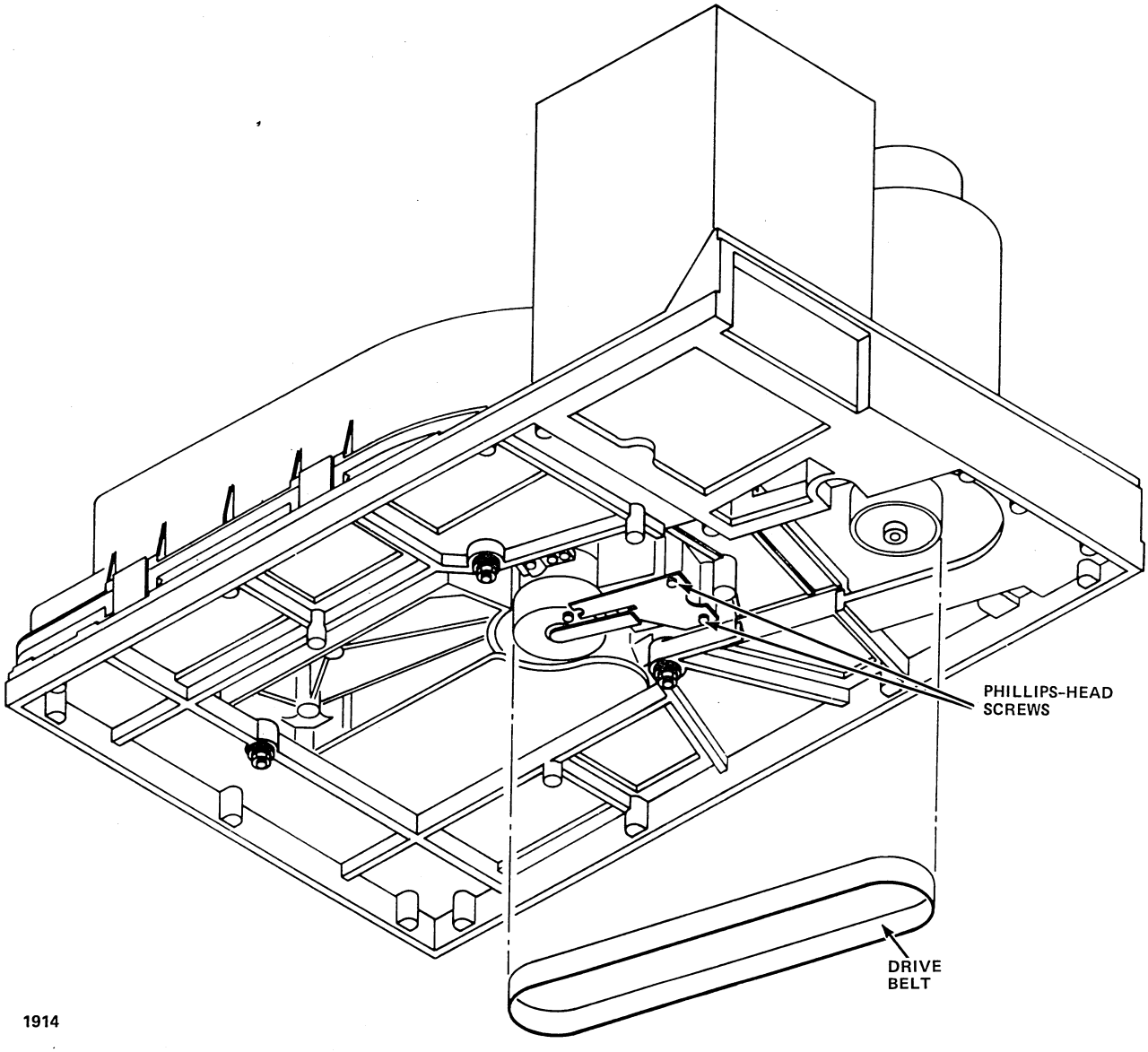

Figure 10-34. Drive Belt Location

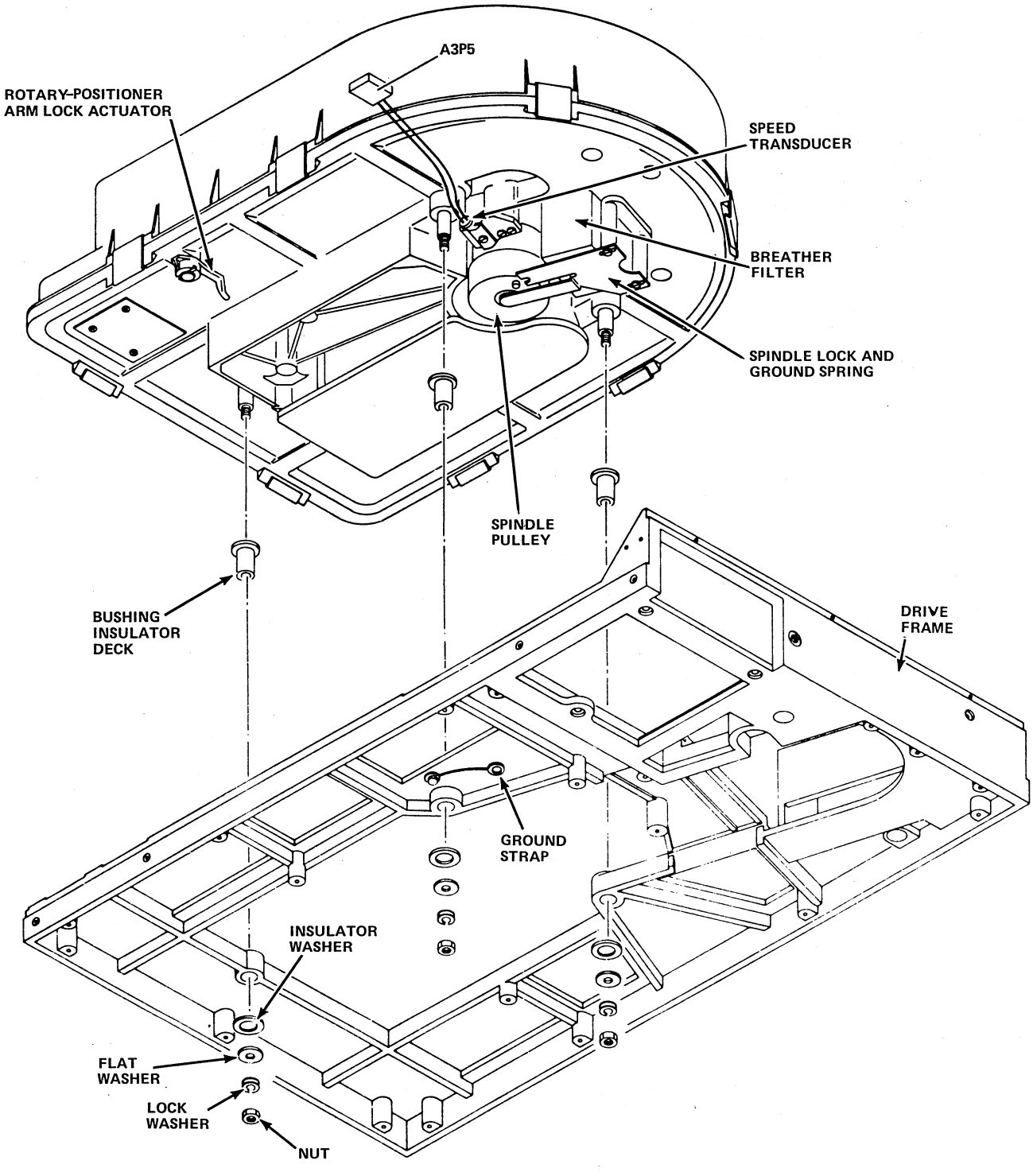

Figure 10-35. Mini-Module Removal and Replacement

14. Replace the bottom cover.

15. Remove the two cable mounts, one at the rear of the logic chassis and the other at the rear panel of the mini-module drive (figure 10-36).

16. Attach the I/O adapter cables as follows:

    a. Connect J2 of the _FAX card assembly to J2 of the cable and plate assembly.

    b. Connect J3 of the _FAX card assembly to J3 of the cable and plate assembly.

    c. Connect J4 of the _FAX card assembly to J4 of the cable and plate assembly.

17. Place the I/O adapter cables in position, and replace two cable mounts to hold the cables down as shown in figure 10-36.

18. Replace the top cover.

System Grounding

The controller and its attached mini-module drives must be connected to earth ground. The permissible grounding schemes listed in preferred order are as follows:

1. The controller and mini-module drives are connected to a qualified site floor ground. A qualified ground consists of a floor grid where the horizontal and vertical members of the grid are mechanically secure and have ground straps or an equivalent joining them to assure a constant ground potential. In turn, the grid must be connected to earth ground. An alternate qualified floor ground is a grounding grid or grounding bus system provided under a false floor.

2. The controller and mini-module drives are connected to an otherwise qualified floor grid, except that the floor grid is isolated from earth ground. In this case, the controller is then connected to the earth ground system.

3. No site floor grid is available. The controller and mini-module drives are connected to each other in a daisy-chain configuration, with the controller connected to earth ground.

Floor Grid Available

If a floor grid is available, each drive is to be individually connected to the floor grid. Ground each drive as follows.

NOTE

The system ground must connect both the drive's dc logic and ac frame ground to earth. In the mini-module drive, the ac and dc grounds are tied together by the drive frame; the isolation of ac and dc is not available.

The frame grounding terminal is located at the rear of the drive, to the right of the power distribution box, and consists of a screw and two lock washers attached to the drive frame.

1. Crimp and solder a terminal lug to one end of a predetermined length of flat braided shielding. This makes up one end of the grounding strap. See table 10-5 for grounding accessories.

2. Remove the grounding screw and two washers at the rear of the drive.

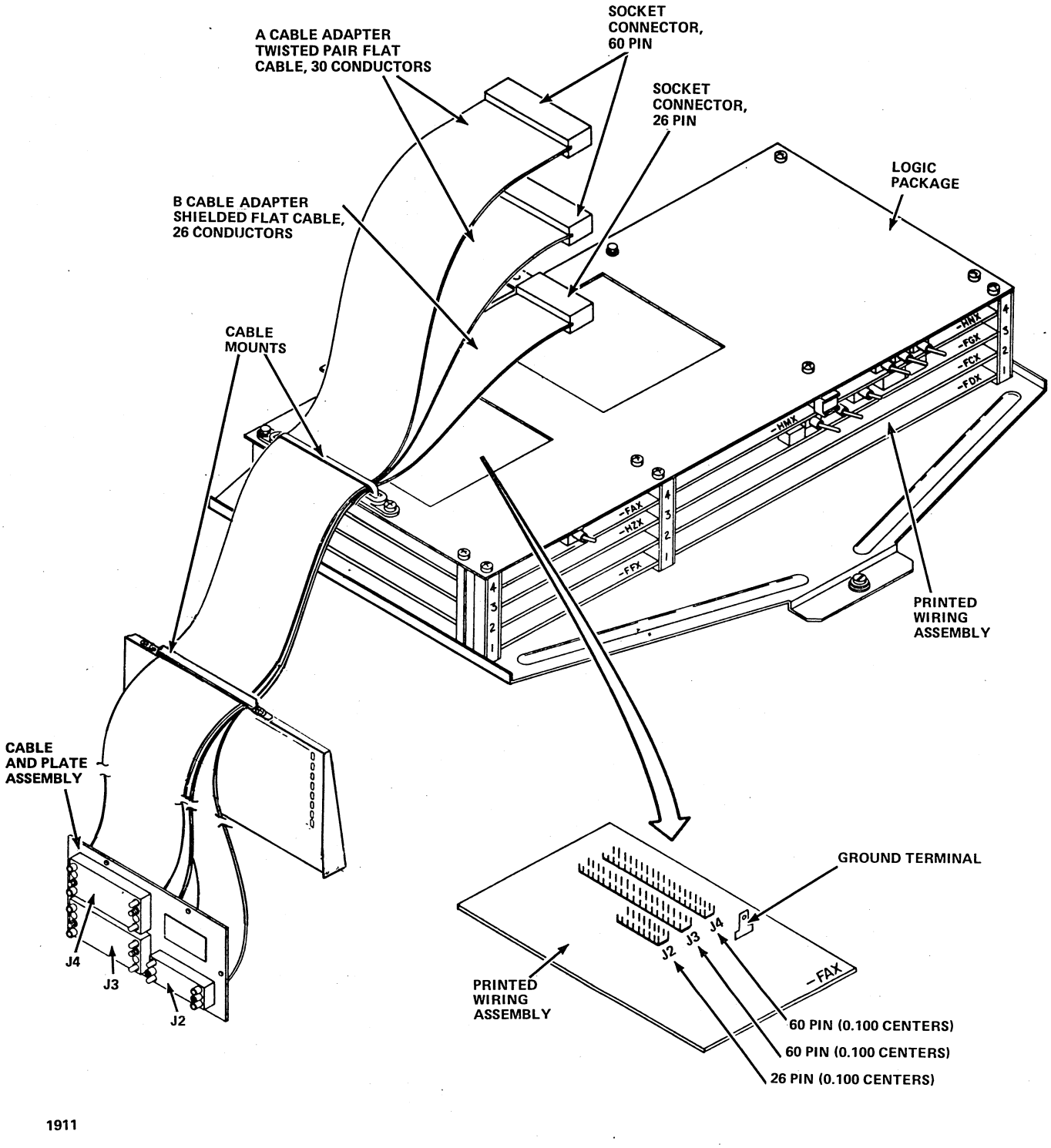

Figure 10-36. Adapter Cable Attachment

3. Place the ground strap lug between the washers, and attach it onto the drive frame.

4. Route the free end of the braided ground strap through the floor cutout.

5. Cut the braided ground strap to the proper length, and attach the terminal lug to the free end as in step 1.

6. Drill an 11/32-inch (8.7-millimeter) hole in the floor grid.

7. Secure the terminal lug to the floor grid using a screw, lock washer and nut. The lock washer goes between the terminal lug and the floor grid. See table 10-5 for grounding accessories.

Floor Grid Not Available

If a floor grid is not available, all of the mini-module drives must be connected to the controller in a daisy-chain grounding configuration. In turn, the controller must be connected to earth ground. See figure 10-23 for the ground configuration.

The ground connections are via flat braided straps. Cut the straps to the lengths required for drive to drive, drive to controller, and controller to earth ground. Crimp and solder a terminal lug to the end of each strap. Refer to table 10-5 for grounding accessories.

Earth ground at the site may be available at the main power distribution panel (if it is connected to building ground) at the steel plate in contact with the masonry below the panel (if the panel is not connected to earth ground), or to an earth ground bus. Connect one end of a prepared ground strap to the available ground. Connect the remaining grounds as follows.

NOTE

The frame grounding terminal is located at the rear of the drive, to the right of the power distribution box, and consists of a screw and two lock washers attached to the drive frame.

1. Attach the ground strap to the above-mentioned screw at the rear of each drive. Place one lock washer beneath each terminal lug. One ground strap goes to each of the two closest drives. Tighten the screw.

2. Repeat step 1 for the remaining drives. The drive closest to the controller is to be connected to the controller ground. See figure 10-23 for the ground configuration.

System Cabling

I/O Cabling

Each mini-module drive connects to the controller via two I/O cables, which are designated the A cable and the B cable.

The B cable (J2) always connects directly to the controller. However, if more than one drive is involved in the system, the A cable (J3) is daisy-chain connected.

When in a daisy-chain configuration, the drives are connected as shown in figures 10-1 and 10-2. Only the A cable (J3) of the first drive in the chain connects directly to the controller; the others connect (J4) to (J3) in a daisy chain. The last drive in the chain is left with an extra A cable connector (J4), which is terminated.

The A cable is indicated in figure 10-37, which provides the signal names, jack, and pin numbers. Figure 10-38 shows the B cable interface. The following text provides the physical and electrical characteristics of both I/O cables A and B. Both cables are of a round construction and plug into the cable adapter plate. Table 10-2 lists the available part numbers and cable lengths. Figure 10-39 shows a possible method of routing the cables within the rack. A sufficient amount of I/O adapter cables must be allowed to fully extend the mini-module drive unit.

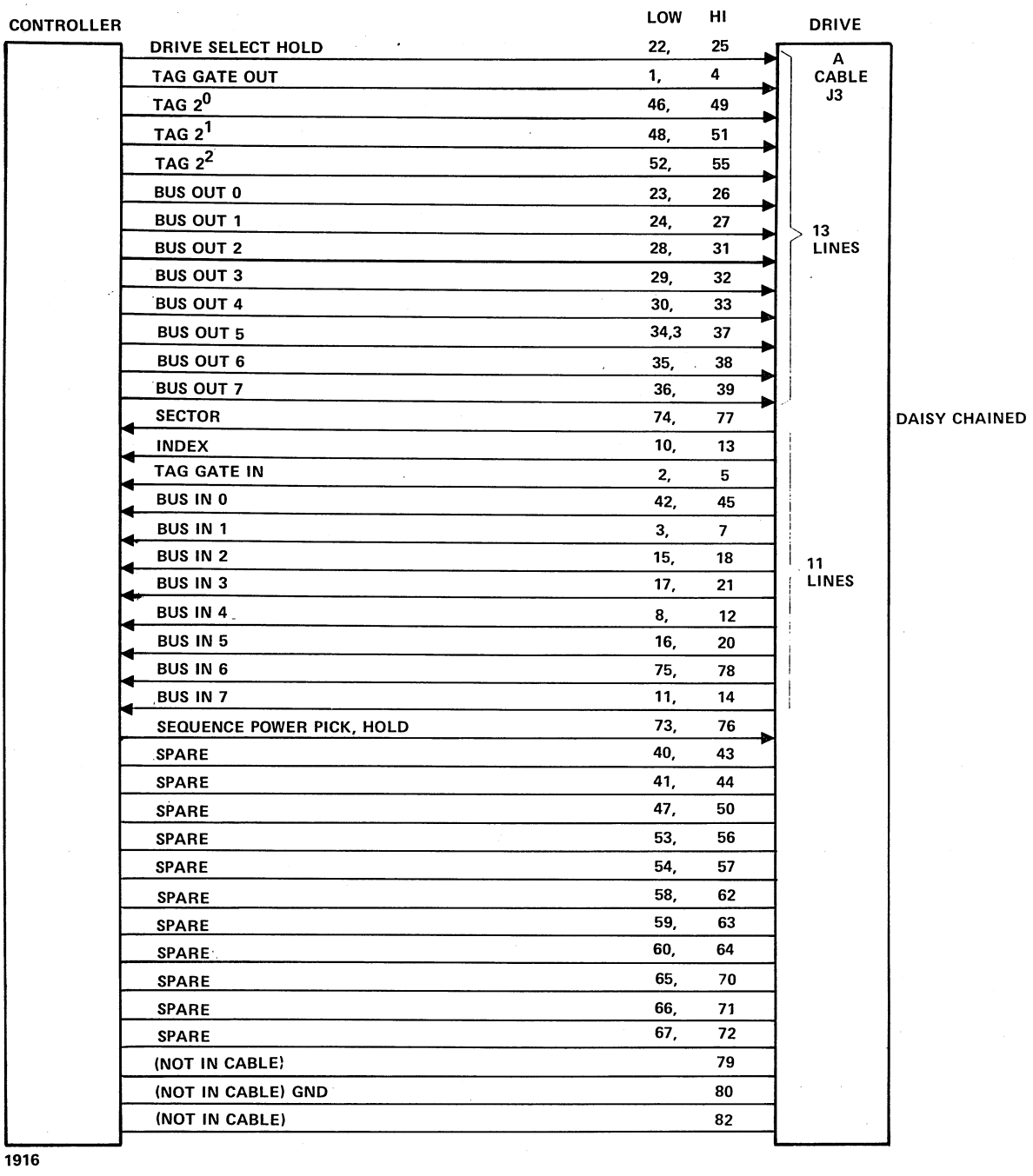

Figure 10-37. A Cable Interface

CONTROLLER			DRIVE
	READ/WRITE DATA	A, B†	
	READ/WRITE DATA SHIELD	D	
	WRITE CLOCK	H, J †	
	WRITE CLOCK SHIELD	E	
	SERVO CLOCK	M, N†	
	SERVO CLOCK SHIELD	K	
	SPARE	U,V	
	SPARE	T	
	READ CLOCK	W, X ††	
	READ CLOCK SHIELD	Y††	
	SEEK END	AA, CC †	
	MODULE ADDRESS	BB, DD †	
	SPARE	LL, NN †††	
	SPARE	MM, C, F, L, Z, KK†††	
	SPARE	P, R, S †††	
	INTERRUPT	EE, HH	
	SPARE (RESERVED)	FF, JJ	

†NOT GATED BY UNIT SELECT
††OPTIONAL AND NOT GATED BY UNIT SELECT
†††NOT IN CABLE

1917

Figure 10-38. B Cable Interface

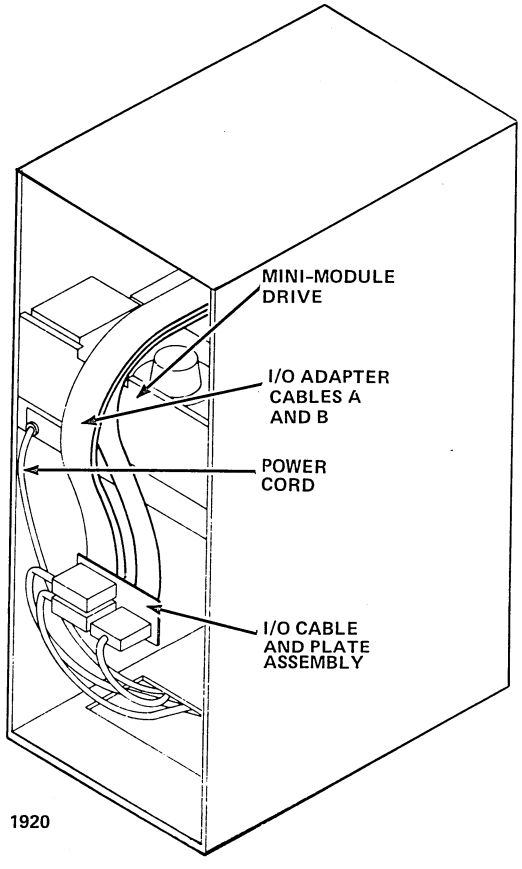

Figure 10-39. Typical Cable Routing

BU281 Mass-Storage Cabinet Cabling

1. Install the A and B cables to the bracket connecting plate as shown in figure 10-40.
2. Install the ground strap to the drive (mounted above the controller) as shown in figure 10-40.
3. Route the power cable and the other B cables (if applicable) as shown in figure 10-40.
4. Install the rear and side panels and air filter assembly to the drive cabinet (refer to steps 4, 5, and 8 of BU281 Mass-Storage Cabinet Preparation).

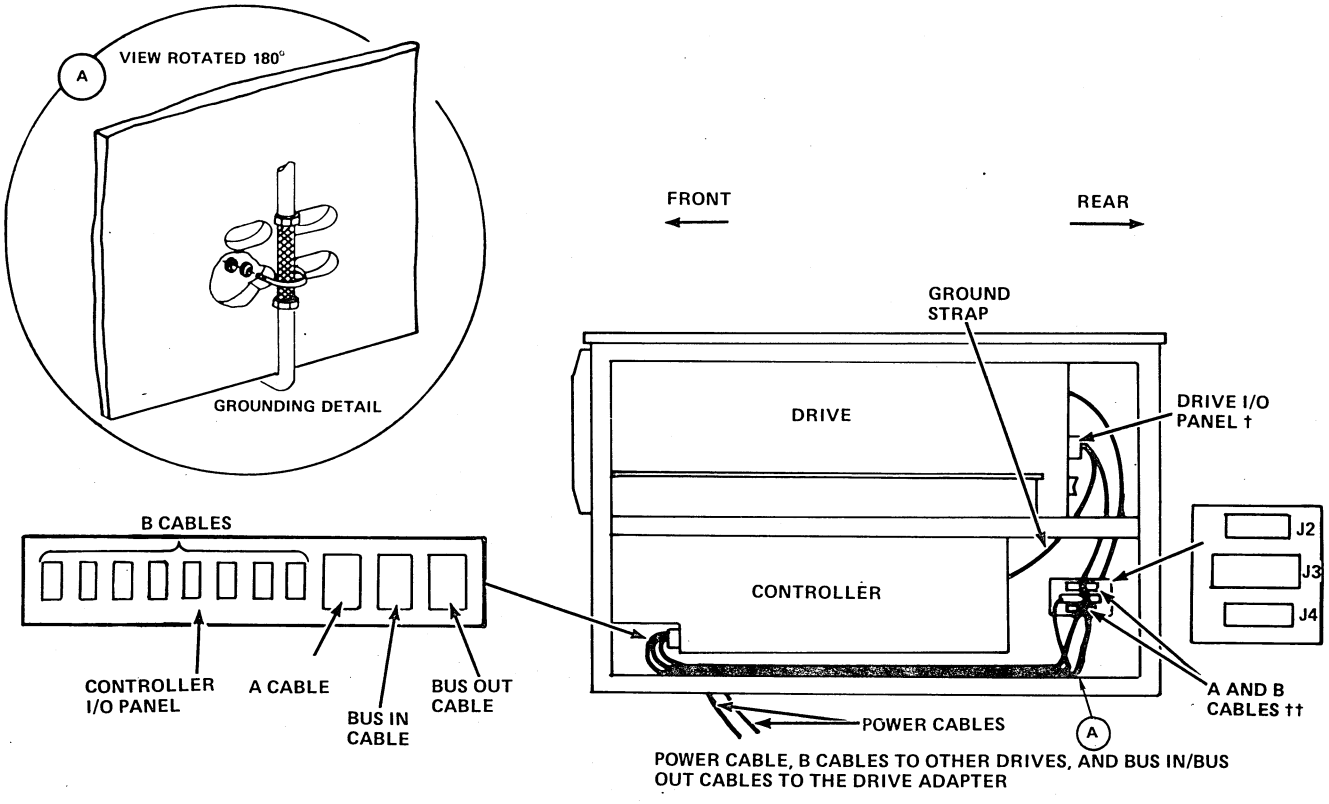

†REFER TO THE APPLICABLE DRIVE MANUALS FOR I/O PANEL DETAILS. NOTE THAT THE A CABLE SHOULD BE PLUGGED INTO THE CONTROLLER FIRST TO ENSURE PROPER ORIENTATION AT THE DRIVE I/O PANEL.

††THESE CABLES HAVE RIGHT ANGLE CONNECTORS.

1897

Figure 10-40. BU281 Mass-Storage Cabinet Cabling

Ac Power Cabling

When laying out the site, consideration must be given to providing source ac power connections for each drive. Provide an ac power source connection within 6 feet (1.8 meters) for each drive. The 60 Hz drives are supplied with a 6-foot (1.8 meter) power cord, which has a connector (as shown in figure 10-41). The 50 Hz drives are supplied with a 6-foot (1.8 meter) cord, which does not come with a connector. For 50 Hz drives, connect the green/yellow wire in the power cord to ground; connect the other two wires phase to phase or phase to neutral.

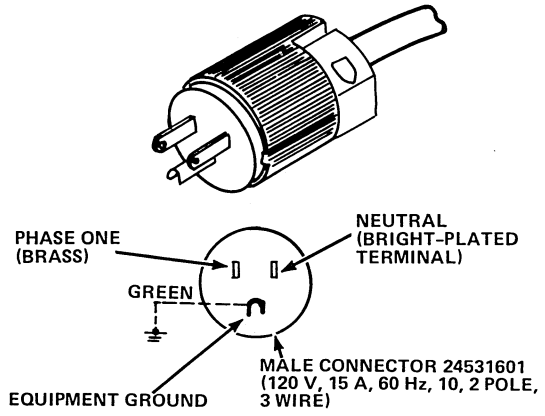

Figure 10-41. 60 Hz ac Power Connector

If the wires or connector must be changed or replaced, the screws at the cable end of the connector are removed, exposing the interior of the connector. Figure 10-41 shows where the wires are connected for single-phase operation with the 60 Hz connector.

The 50 Hz connector uses either 220 or 240 V from its source. The wires are color coded as follows:

- Black or brown to phase 1
- White, blue or gray to neutral
- Green or green/yellow to ground terminal

Transformer Wiring

By installing the proper jumper wires into J01/P01 on the power supply, it is possible to select the various power options. Figure 10-42 shows P01 with the pin configuration. Listed below are the jumper requirements to select the various power supply voltages; the plug can be removed for jumpering purposes. The jumpers control the primary windings of transformer T1.

Nom. Volts	Frequency	
100	60-J4	1 to 5 to 10 and 2 to 6 to 12
120	60-J4	1 to 5 to 10 and 3 to 7 to 12
200	60-J4	1 to 11 and 2 to 5 and 6 to 12
240	60-J4	1 to 11 and 3 to 5 and 7 to 12
100	50-J5	1 to 5 to 10 and 3 to 7 to 12
120	50-J5	1 to 5 to 10 and 4 to 8 to 12
200	50-J5	1 to 11 and 3 to 5 and 7 to 12
220	50-J5	1 to 11 and 4 to 5 and 7 to 12

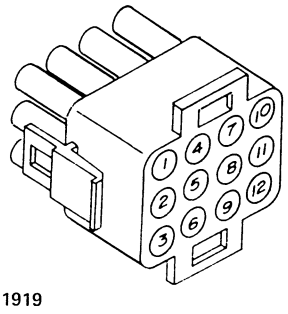

Figure 10-42. Power Selector

Terminations

Generally, I/O cables 25 feet (7.6 meters) in length, or greater, require terminations on each end of the line to allow the proper transmission of data. The mini-module drive uses a 72-pin terminator plug assembly; and when required, plugs into J4 on the I/O cable and plate assembly to the rear of the drive, as shown in figure 10-43.

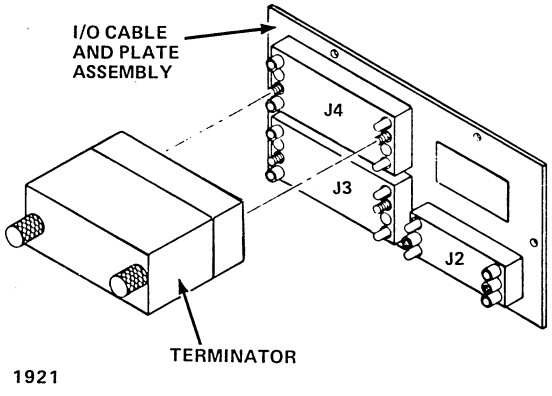

Figure 10-43. Terminator Assembly

With the drives connected in a daisy-chain configuration, the terminator assembly is installed in the last drive of the chain only, as shown in figures 10-1 and 10-2.

SWITCH SETTINGS

Logical Address and Sector Selection

Figure 10-44 shows the approximate location of the unit select switch and sector select switch assemblies. The unit select switch assembly comprises four independent switches, providing 16 possible unit selections. The sector select switch assembly has 12 independent switches for 211, or 2048 possible sector selections.

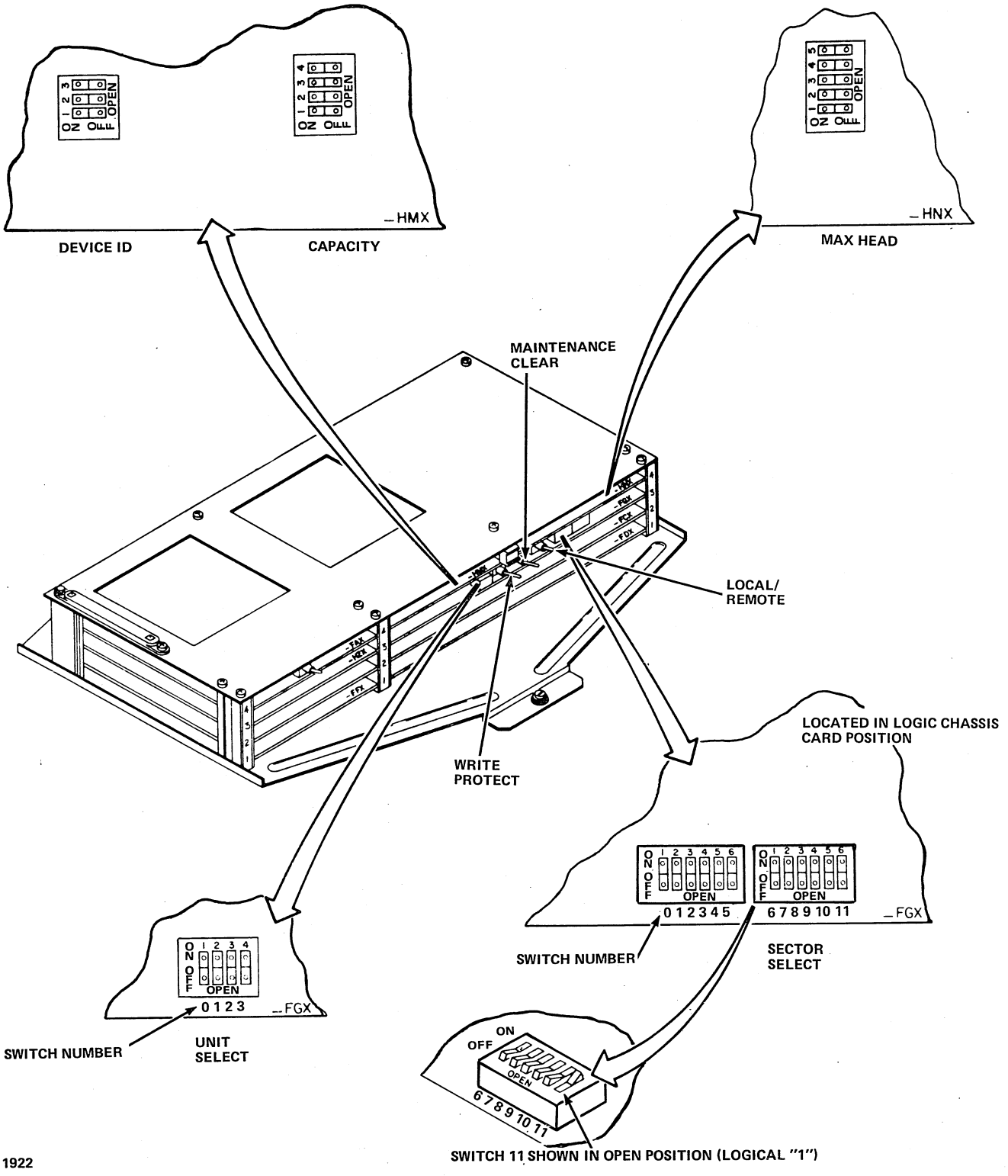

Figure 10-44. Mini-Module Drive Switch Locations

The switches are mounted on the _FGX board assembly, which occupies the second location from the top. The open position is to the card edge side. When the rocker is pressed, it is in the open position, as shown in detail in figure 10-44.

Table 10-6 shows the sector switch values in the open position.

TABLE 10-6. SECTOR SWITCH VALUES

Switch No.	Binary Value†	Decimal Value†
0	2^0	1
1	2^1	2
2	2^2	4
3	2^3	8
4	2^4	16
5	2^5	32
6	2^6	64
7	2^7	128
8	2^8	256
9	2^9	512
10	2^{10}	1024
11	2^{11}	2048

†Value when switch is set in open position

The drive provides the capability of setting the number of sectors per disk revolution. Since the required number of sectors is a system function, refer to the system manual for the number of sectors used. Once the required number of sectors has been determined, it is necessary to determine the following:

- The length of each sector in servo clocks
- The preset value, which is the decimal number representing the switch settings
- The switches to set to the open position

Sector Select Switches

The sector select switch assemblies are located on the _FGX card, LOC B03/C03. These switches have two housings, each containing six switches. The open position is a logical 1; the closed position is a logical 0 (see figure 10-44).

The sector select switches select the number of physical sectors per track for the drive. Table 10-7 provides the switch positions for all allowable sectors per track. The normal setting is 64 sectors.

The following formulas can be used to determine the legality, switch settings, and data capacity for any given number of sectors per track (within the range of 4 to 128).

NOTE

In these formulas, values are as follows:

N is the number of sectors per track (decimal).

SL is the sector length in servo clocks.

R is the remainder.

CL is the sector counter length.

PV is the sector counter preset value.

To check the legality of a given number of sectors per track, perform the following:

1. $\frac{13440}{N}$ = SL (integer) + $\frac{R}{N}$ (integer)

2. Record the remainder if R equals or exceeds 52. If the remainder is less than 52 but not 0, the configuration is illegal. If the remainder is 0, all sectors are the same length.

3. To check the data capacity (in bytes) for each sector, perform the following:

   SL x 1.5 = total bytes per sector

4. Subtract the total sector overhead:

   Total bytes per sector
   -116
   Total data bytes per sector

5. If the remainder recorded in step 2 is 52 or greater, one additional sector exists. This sector has an address field only; no data field exists.

6. To determine the sector switch settings, perform the following:

   CL - SL = PV

7. Subtract the following numbers from PV, in order, until PV equals 0. If PV becomes negative, discard the subtracted number and go on to the next number.

2048	11
1024	10
512	9
256	8
128	7
64	6
32	5
16	4
8	3
4	2
2	1
1	0

sector switch number

   For each switch position number subtracted, (without PV becoming negative), that switch is set to the open position. All other switches are set to the closed position.

In the following steps, 69 sectors per track are used as an example.

1. $\frac{13440}{69} = 194 + \frac{54}{69}$

2. R = 54 (remainder is 54)

3. 194 x 1.5 = 291 (total bytes per sector)

4.
   291 (total bytes per sector)
   -116 (sector overhead)
   175 (total data bytes per sector)

TABLE 10-7. SWITCH POSITION FOR ALLOWABLE SECTORS PER TRACK

Sectors per Track	Switch Number											
	0	1	2	3	4	5	6	7	8	9	10	11
1 through 4	0	0	0	0	0	+	+	+	0	+	0	0
5	0	0	0	0	0	0	0	+	+	0	+	0
6	0	0	0	0	0	0	+	0	+	+	+	0
7	0	0	0	0	0	0	0	+	0	0	0	+
8	0	0	0	0	+	+	+	0	+	0	0	+
10	0	0	0	0	0	0	+	+	0	+	0	+
12	0	0	0	0	0	+	0	+	+	+	0	+
14	0	0	0	0	0	0	+	0	0	0	+	+
15	0	0	0	0	0	0	0	+	0	0	+	+
16	0	0	0	+	+	+	0	+	0	0	+	+
20	0	0	0	0	0	+	+	0	+	0	+	+
21	0	0	0	0	0	0	0	+	+	0	+	+
24	0	0	0	0	+	0	+	+	+	0	+	+
28	0	0	0	0	0	+	0	0	0	+	+	+
30	0	0	0	0	0	0	+	0	0	+	+	+
32	0	0	+	+	+	0	+	0	0	+	+	+
35	0	0	0	0	0	0	0	+	0	+	+	+
40	0	0	0	0	+	+	0	+	0	+	+	+
42	0	0	0	0	0	0	+	+	0	+	+	+
48	0	0	0	+	0	+	+	+	0	+	+	+
56	0	0	0	0	+	0	0	0	+	+	+	+
60	0	0	0	0	0	+	0	0	+	+	+	+
64	0	+	+	+	0	+	0	0	+	+	+	+
69	+	0	+	+	+	0	+	+	0	+	+	+
70	0	0	0	0	0	0	+	0	+	+	+	+

Notes:

+ - Open

0 - Closed

The maximum allowable sectors per track are 128. However, the disk efficiency is lowered to an unrealistic value. Sectors per track above 70 are not recommended.

5. The remainder is 54, making the configuration legal. An extra sector of the address field exists.

6. 4096
   - 194
   3902 (preset value)

7. 3902
   -2048
   1854 Switch 11 is set to OPEN.
   -1024
   830 Switch 10 is set to OPEN.
   - 512
   318 Switch 9 is set to OPEN.
   - 256
   62 Switch 8 is set to OPEN.
   - 32 Switch 7 is set to CLOSED.
   30 Switch 6 is set to CLOSED.
   - 16 Switch 5 is set to OPEN.
   14 Switch 4 is set to OPEN.
   - 8
   6 Switch 3 is set to OPEN.
   - 4
   2 Switch 2 is set to OPEN.
   - 2 Switch 1 is set to OPEN.
   0 Switch 0 is set to CLOSED.

Write Protect Switch

The write protect switch is located on the _FGX card, LOC B03/C03. This switch is used to write protect the drive, which means that all writes to the drive are prevented. This switch must be set to the unprotected position (bat handle toward the rear of the unit) for normal operation (figure 10-44).

Local/Remote Switch

The local/remote switch is located on the _FGX card, LOC B03/C03. This switch selects either local or remote power on sequencing. The local/remote switch must be set to the local position (bat handle towards the front of the unit) for normal operation (figure 10-44).

Logical Unit Select Switches

The logical unit select switch assembly is located on the _FGX card, LOC B03/C03. The switch assembly consists of four independent switches, providing 16 possible unit number selections. The switch pressed to the off position is a logical 1, as shown in figure 10-45. Refer to table 10-8 for the 16 possible unit number selections.

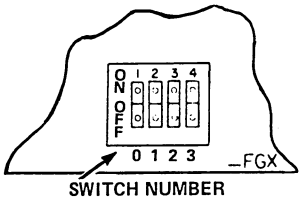

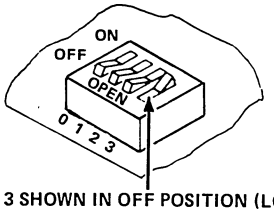

SWITCH 3 SHOWN IN OFF POSITION (LOGICAL "1")

1923

Figure 10-45. Logical Unit Select Switches

TABLE 10-8. SWITCH POSITIONS FOR UNIT NUMBER SELECTIONS

Logical Unit Number	Switch Number			
	0	1	2	3
0	0†	0	0	0
1	1††	0	0	0
2	0	1	0	0
3	1	1	0	0
4	0	0	1	0
5	1	0	1	0
6	0	1	1	0
7	1	1	1	0
8	0	0	0	1
9	1	0	0	1
A	0	1	0	1
B	1	1	0	1
C	0	0	1	1
D	1	0	1	1
E	0	1	1	1
F	1	1	1	1

†ON Switch is closed providing a logical "0"

††OFF Switch is open providing a logical "1"

Max Head Switches

The max head switch assembly is located on the _HNX card, LOC C04. The switch assembly consists of five independent switches for selecting the number of heads for the unit. This switch assembly must be set according to figure 10-46.

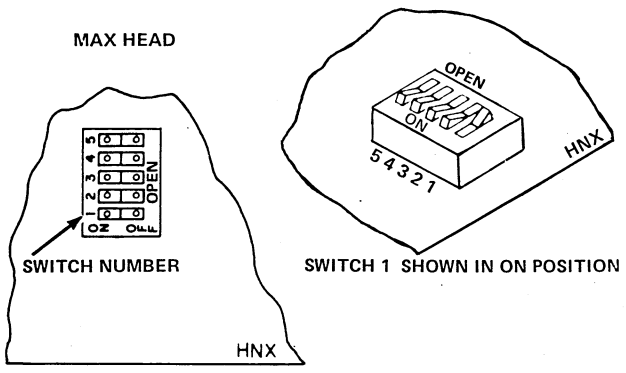

SWITCH NUMBER

POSITION	5	4	3	2	1
	OFF	OFF	ON	ON	OFF

1924

Figure 10-46. Max Head Switch Assembly

Device ID Switches

The device ID switch assembly is located on the _HMX card, LOC B04. It consists of three independent switches for selecting the identity of the device. The device ID must be set according to figure 10-47.

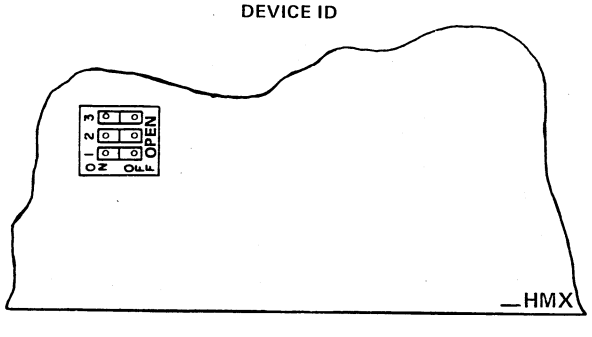

SWITCH NUMBER

POSITION	3	2	1
	OFF	ON	ON

1925

Figure 10-47. Device ID Switch Assembly

Device Capacity Switches

The device capacity switch assembly is located on the _HMX card, LOC B04. Four independent switches define the capacity of the unit. These switches must be set according to figure 10-48.

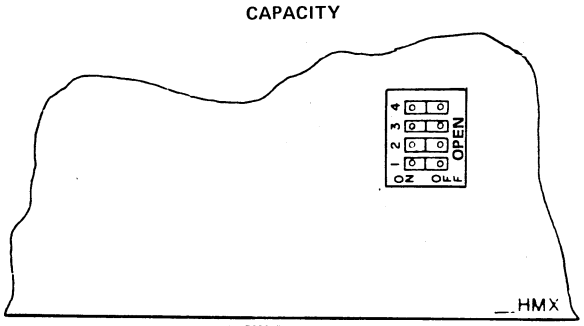

SWITCH NUMBER

POSITION	4	3	2	1
	OFF	ON	ON	ON

1926

Figure 10-48. Device Capacity Switch Assembly

CHECKOUT

After installation, perform the visual inspection, initial start-up, electrical checks, and diagnostics.

Visual Inspection and Verification

Refer to the mini-module drive hardware maintenance manual and perform the following inspection prior to installing the drive:

1. At the top of the drive, take out ten socket-head screws and remove the top cover.
2. At the bottom of the drive, loosen the three Phillips-head screws and remove one setscrew at the back of the cover. Slide the cover so that the three Phillips-head screws fall through the cover slots. Remove the bottom cover by dropping it straight down.
3. Verify that all logic cards are firmly seated in the logic chassis and power supply.
4. Verify that all connectors are firmly seated.
5. Verify that all cabling is intact and that there are no broken or damaged wires.
6. Inspect the entire drive for the presence of foreign material.
7. Inspect the actuator and disk area for the presence of material that might obstruct movement of the carriage and heads.
8. Verify that the actuator is unlocked.
9. Confirm that the spindle is unlocked.
10. Verify that the spindle and ground spring are installed properly.

11. Confirm that the drive belt has been installed.

12. Verify that the drive motor is unlocked.

Initial Start-Up

After installation and the visual inspection have been completed, follow the sequence outlined below for initial start-up:

1. Place the LOC/REM switch in the LOC position.

2. Place the power ON/OFF switch in the ON position.

NOTE

With the drive's LOC/REM switch in the LOC position, the drive motor starts as soon as the +5 V is available. If the LOC/REM switch is in the REM position, the drive motor starts under controller command by furnishing a sequence pick signal.

3. If the drive motor fails to start, check the following:

   a. The main ac power fuse on the rear of the drive.

   b. The fuses, ±5 and ±24 V, on the power supply (figure 10-49).

   c. The thermo-overload switch on the drive motor. Reset if necessary.

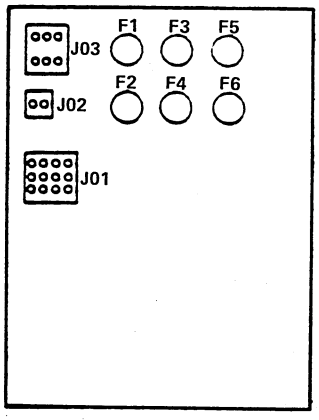

NOTES:
F1-1 A, F/A, -24 V
F2-250 V AC, 1.5 A, S/B
F3-2 A, F/A, +24 V
F4-125 V AC, 3 A, S/B
F4-250 V AC, 1.5 A, S/B
F5-5 A, F/A, +5 V
F6-5 A, F/A, -5 V

FUSE DEFINITIONS ARE ALSO PRINTED ON THE SIDE OF THE POWER SUPPLY

1927

Figure 10-49. Power Supply Fuse Locations

4. Observe that the three fans on the front panel have started and continue to run.

5. Observe that the actuator has moved the heads to track 0.

6. Observe that with the drive motor up to speed and the heads at track 0, the ready indicator on the front panel is illuminated green.

7. Observe that if a fault condition exists, the ready indicator is not illuminated; but the fault clear indicator is illuminated red.

8. Press the fault clear switch to clear the fault indicator. If the fault condition is no longer present, the ready indicator illuminates green.

9. Power down the drive, and replace the bottom cover to the drive.

The drive is now ready for the electrical checks.

Electrical Checks

Power-up the drive, and perform the following electrical checks:

1. Check the ±5 V for the presence of the proper voltage level at the backplane. The voltage present between the voltage terminals and the ground terminal should be 5.0 ±0.5 V.

NOTE

If the ±5 V is outside the designated limits, adjust the power supply voltages as described under Tests and Adjustments in the mini-module drive hardware maintenance manual.

2. Check the ±24 V for the presence of the proper voltage level at the backplane. The voltage present between the voltage terminals and the ground terminal should be 24.0 ±2.4 V. If the voltage is out of tolerance, change regulator card assembly _WMN.

3. Install the top cover to the drive. The drive is now ready for diagnostic testing.

Diagnostics

Refer to the subsystem field repair guides for the diagnostics required to check completely the proper functional operation of the drive.

MODULE DRIVE INTERFACE AND ADAPTER

The module drive interface or adapter is a one-board device that is inserted into a specific board slot in the processor. Refer to section 1 for specified locations.

UNCRATING

The module drive interface or adapter printed wiring assembly is shipped installed in the processor or packed into a heavy duty cardboard carton. It is buffered from shock and impact damage by an industrial filler. No special instructions are required to remove either unit. Crating instructions are identical to uncrating instructions.

INSPECTION

Inspect the module drive interface or adapter as follows:

1. Remove the module drive interface or adapter printed wiring assembly from the shipping container.
2. Inspect for physical damage to the printed wiring assembly and components

JUMPERS

GB138-A Module Drive Interface Jumpers

The module drive interface has several jumpers that provide a convenient way of implementing system assembly parameters. All jumpers consist of soldered connections on the printed wiring assembly (PWA).

To change any jumper, the PWA must be removed from the chassis as follows:

1. Remove the side panel of the system cabinet.
2. Release the two captive latches on the processor chassis cover, and remove the cover.
3. Use the extractor tool attached to the cover to remove the module drive interface from the chassis.

Program Protect

The module drive interface can operate in a protected or unprotected mode. Selecting the protect mode requires the installation of the protect jumper. Table 10-9 and figure 10-50 illustrate the location and normal operating position of the program protect jumper on the module drive interface.

Seek End Interrupt

One jumper is required to allow the module drive interface to generate an interrupt to the processor upon completion of a seek end on one or more disk drives. (See table 10-9 and figure 10-50.)

Alternate Module Drive Interface

This jumper allows a request from the alternate module drive interface to be recognized by the active module drive interface. (See table 10-9 and figure 10-50.)

Select Hold

This jumper identifies the module drive interface as being select hold 0 (module drive interface 0) or select hold 1 (module drive interface 1). (See table 10-9 and figure 10-50.)

Autoload Switch Format

This jumper provides the capability of using a form C switch or a logic level pulse of less than 500 nanoseconds in duration to initiate an autoload function. (See table 10-9 and figure 10-50.)

TABLE 10-9. GB138-A JUMPER SETTINGS

Location	Function
PROGRAM PROTECT (A4)	
E21 to E23	Protect †
E22 to E23	Unprotect
SEEK END INTERRUPT (A10)	
	Alert from controller to module drive interface
E36 to E37	Alert 0†
E37 to E38	Alert 1
AUTOLOAD SWITCH ENABLE (N2)	
E18 to E20	Form C Switch†
E19 to E20	Logic Level Pulse
ALTERNATE MODULE DRIVE INTERFACE INTERRUPT (A11) MODULE DRIVE INTERFACE 0 SELECT	
E39 to E40	From alternate module drive interface†
E41 to E42	To alternate module drive interface†
ALTERNATE MODULE DRIVE INTERFACE INTERRUPT (A11) MODULE DRIVE INTERFACE 1 SELECT	
E39 to E42	To alternate module drive interface
E40 to E41	From alternate module drive interface
SELECT HOLD (J1) MODULE DRIVE INTERFACE 0 SELECT	
E16 to E17	Sample select hold†
E14 to E15	Transmit select hold†
SELECT HOLD (J1) MODULE LINE INTERFACE 1 SELECT	
E14 to E17	Sample select hold
E15 to E16	Transmit select hold

†Normal position

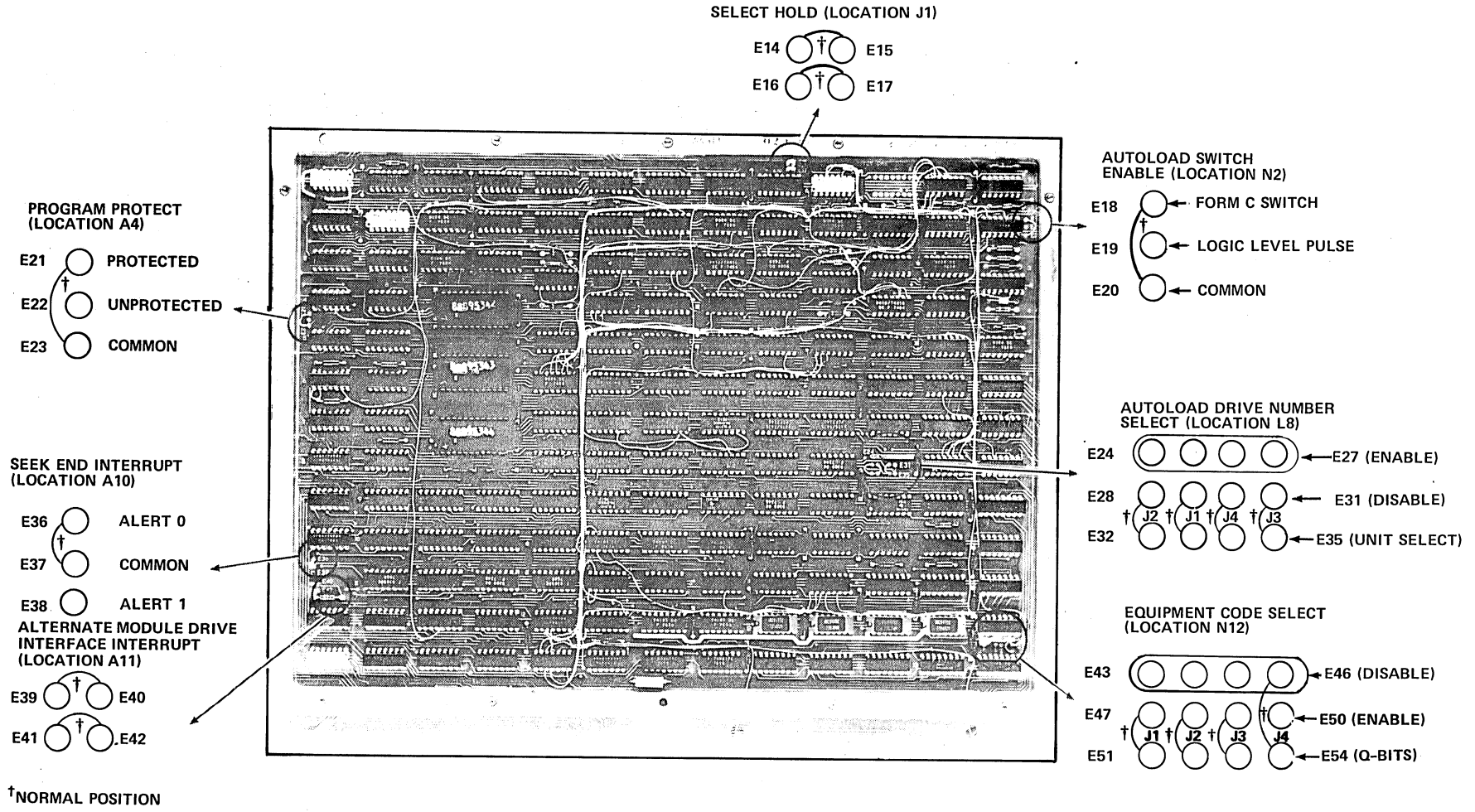

Figure 10-50. GB138A Module Drive Interface Control Jumpers

Autoload Drive Unit Select

Four jumpers are provided to select the logical drive unit number when an autoload (bootstrap) operation is initiated from the console. After the AUTOLOAD switch is pressed, the selected module drive seeks to address 0 (cylinder, head, track 0) and reads 1536 sequential words from this area. This data is deposited into sequential processor memory locations, beginning with location 0. See figure 10-50 and table 10-10.

NOTE

Only slot H is prewired for autoload.

TABLE 10-10. AUTOLOAD DRIVE UNIT (LOCATION L8)

Logical Unit Number	Unit select Line				Enable/Disable Jumpers			
	E33	E32	E35	E34	J1	J2	J3	J4
0†	0	0	0	0	D	D	D	D
1	0	0	0	1	D	D	D	E
2	0	0	1	0	D	D	E	D
3	0	0	1	1	D	D	E	E
4	0	1	0	0	D	E	D	D
5	0	1	0	1	D	E	D	E
6	0	1	1	0	D	E	E	D
7	0	1	1	1	D	E	E	E
8	1	0	0	0	E	D	D	D
9	1	0	0	1	E	D	D	E
10	1	0	1	0	E	D	E	D
11	1	0	1	1	E	D	E	E
12	1	1	0	0	E	E	D	D
13	1	1	0	1	E	E	D	E
14	1	1	1	0	E	E	E	D
15	1	1	1	1	E	E	E	E

†Normal position

D = disabled

E = enabled

Equipment Number

To select the module drive interface equipment number, four jumpers must be installed to represent the proper binary number to which the module drive interface responds (Q register, E field). Figure 10-50 and table 10-11 illustrate the location and normal operating positions of equipment code select jumpers on the module drive interface.

TABLE 10-11. EQUIPMENT CODE SELECT (LOCATION N12)

Hex Value	Equipment Code Q Bits				Enable/Disable Jumpers			
	E51	E52	E53	E54	J1	J2	J3	J4
1	0	0	0	1	D	D	D	E
2	0	0	1	0	D	D	E	D
3	0	0	1	1	D	D	E	E
4	0	1	0	0	D	E	D	D
5	0	1	0	1	D	E	D	E
6	0	1	1	0	D	E	E	D
7	0	1	1	1	D	E	E	E
8	1	0	0	0	E	D	D	D
9	1	0	0	1	E	D	D	E
A	1	0	1	0	E	D	E	D
B	1	0	1	1	E	D	E	E
C	1	1	0	0	E	E	D	D
D	1	1	0	1	E	E	D	E
E†	1	1	1	0	E	E	E	D
F	1	1	1	1	E	E	E	E

D = disabled

E = enabled

†Normal position

GB145 Module Drive Adapter

The module drive adapter has several jumpers that provide a convenient way to implement system assembly parameters. All jumpers consist of jumper plugs on the PWA.

To change any jumper, the PWA must be removed from the chassis as follows:

1. Remove the side panel of the system cabinet.
2. Release the two captive latches on the processor chassis cover, and remove the cover.
3. Use the extractor tool attached to the cover, and remove the module drive adapter from the chassis.

Seek End Interrupt

One jumper is required to allow the module drive adapter to generate an interrupt to the processor upon completion of a seek end on one or more disk drives. See table 10-12 and figure 10-51.

TABLE 10-12. GB145 JUMPER SETTINGS

Location	Function
SEEK END INTERRUPT (A13)	
	Alert to module drive adapter
E55 to E56	Alert 0†
E56 to E57	Alert 1
AUTOLOAD SWITCH ENABLE (F13)	
E65 to E66	Form C switch
E64 to E65	Logic level pulse†
PROGRAM PROTECT (M10)	
E35 to E36	Protect†
E34 to E35	Unprotect

TABLE 10-12. GB145 JUMPER SETTINGS (Contd)

Location	Function
ALTERNATE MODULE DRIVE ADAPTER INTERRUPT (A13) MODULE DRIVE ADAPTER 0 SELECT	
E61 to E62	From alternate module drive adapter†
E59 to E60	To alternate module drive adapter†
ALTERNATE MODULE DRIVE ADAPTER INTERRUPT (A13) MODULE DRIVE ADAPTER 1 SELECT	
E63 to E62	To alternate module drive adapter
E58 to E59	From alternate module drive adapter
SELECT HOLD (M13) MODULE DRIVE ADAPTER 0 SELECT	
E52 to E53	Receive select hold†
E50 to E51	Transmit select hold†
SELECT HOLD (M13) MODULE DRIVE ADAPTER 1 SELECT	
E49 to E50	Receive select hold
E53 to E54	Transmit select hold
20-BIT MEMORY ADDRESSING (F6)	
E30 to ENC	18 bit†
E29 to E30	20 bit
PROCESSOR TYPE SELECT	
E31 to E32	Processor type†
E32 to E33	Not used

†Normal operation

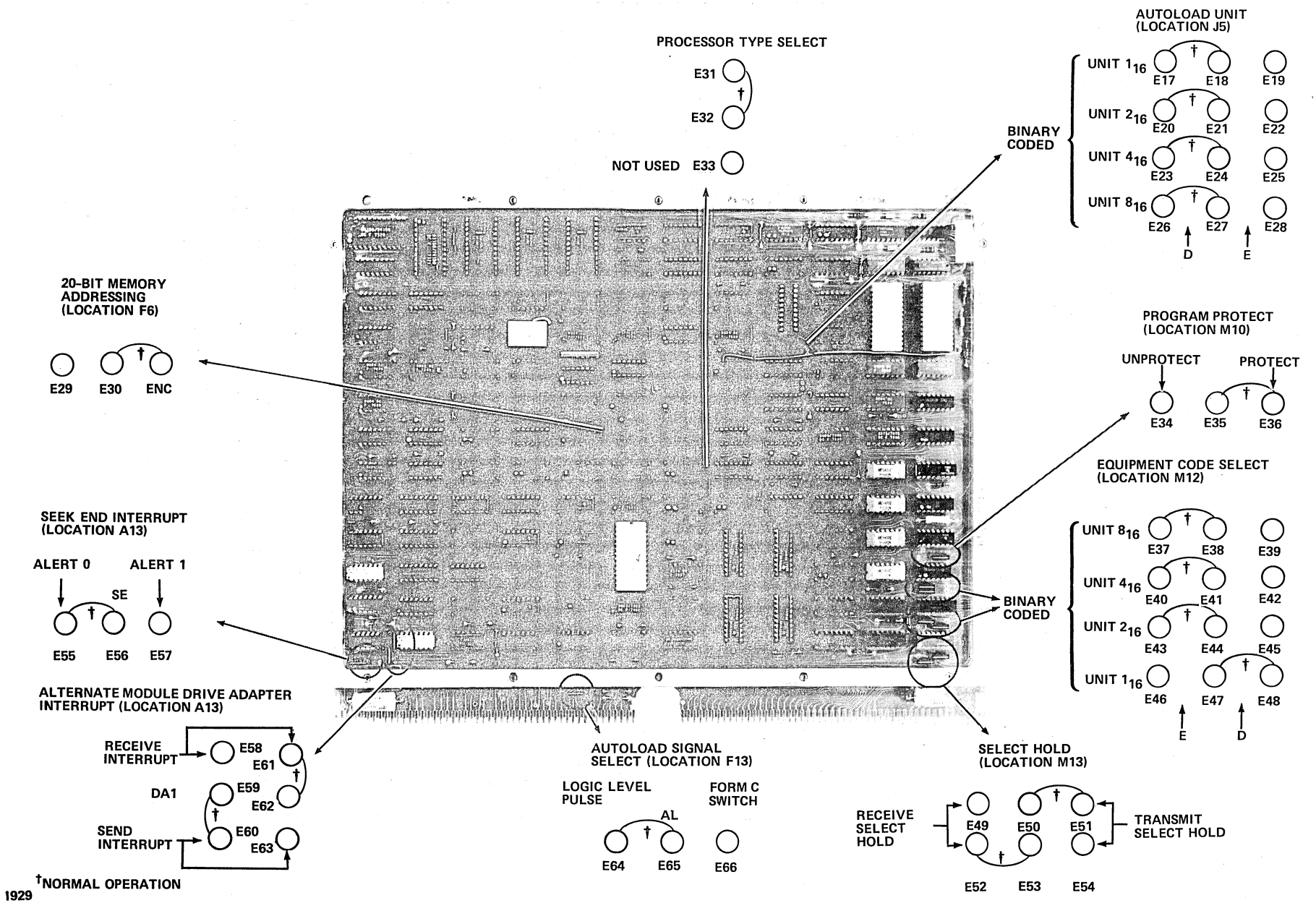

Figure 10-51. GB145-A/B Module Drive Adapter Control Jumpers

Autoload Switch Format

This jumper provides the capability of using a form C switch or a logic level pulse of 100 nanoseconds of duration to initiate an autoload function. (See table 10-12 and figure 10-51)

Program Protect

The module drive adapter can operate in protected or unprotected mode. Selecting the protect mode requires the installation of the protect jumper. Table 10-12 and figure 10-51 illustrate the location and normal operating position of the program protect jumper on the module drive adapter.

Alternate Module Drive Adapter Interrupt

This jumper allows a request from the alternate module drive adapter to be recognized by the active module drive adapter. (See table 10-12 and figure 10-51.)

Select Hold

This jumper identifies the module drive adapter as being select hold 0 (module drive adapter 0) or select hold 1 (module drive adapter 1). (See table 10-12 and figure 10-51.)

20-Bit Memory Addressing

This jumper permits selection of either 18-bit or 20-bit memory addressing. (See table 10-12 and figure 10-51.)

Processor Type Select

This jumper permits selection of the CYBER 18 series processors. (See table 10-12 and figure 10-51.)

Autoload Drive Unit Select

Four jumpers are provided to select the logical drive unit number when an autoload (bootstrap) operation is initiated from the console. After the AUTOLOAD switch is pressed, the selected module drive seeks to address 0 (cylinder, head, track 0) and reads 6144 sequential words from this area. This data is deposited into sequential processor memory locations, beginning with location 0. (See figure 10-51 and table 10-13.)

NOTE

Only slot H is prewired for autoload.

TABLE 10-13. AUTOLOAD DRIVE NUMBER (LOCATION J5)

Logical Unit Number	Unit select				Enable/Disable Jumpers			
	U8	U4	U2	U1	8_{16}	4_{16}	2_{16}	1_{16}
0†	0	0	0	0	D	D	D	D
1	0	0	0	1	D	D	D	E
2	0	0	1	0	D	D	E	D
3	0	0	1	1	D	D	E	E
4	0	1	0	0	D	E	D	D
5	0	1	0	1	D	E	D	E
6	0	1	1	0	D	E	E	D
7	0	1	1	1	D	E	E	E
8	1	0	0	0	E	D	D	D
9	1	0	0	1	E	D	D	E
10	1	0	1	0	E	D	E	D
11	1	0	1	1	E	D	E	E
12	1	1	0	0	E	E	D	D
13	1	1	0	1	E	E	D	E
14	1	1	1	0	E	E	E	D
15	1	1	1	1	E	E	E	E

†Normal position

D = disabled

E = enabled

Equipment Number

To select the module drive adapter equipment number, four jumpers must be installed to represent the proper binary number to which the module drive adapter responds (Q register, E field). Figure 10-51 and table 10-14 illustrate the location and normal operating positions of the equipment code select jumpers on the module drive adapter.

PWA INSTALLATION

After verifying the normal operating positions of the interface jumpers, return the PWA to the slot in the chassis in the following manner:

1. Orient the position of the PWA so that the components face to the left of the chassis.

2. Carefully insert the PWA into the chassis slot. Check that the PWA is seated properly in the upper and lower chassis guide rails.

3. Ensure that the board is seated fully within the chassis backplane connector by applying firm thumb pressure at the upper and lower corners of the front of the board.

4. Replace the chassis cover plate.

5. Replace the cabinet side panel.

TABLE 10-14. EQUIPMENT CODE SELECT (LOCATION M22)

Hex Value	Equipment Code Q Bits				Enable/Disable Jumpers			
	10	9	8	7	8_{16}	4_{16}	2_{16}	1_{16}
1	0	0	0	1	D	D	D	E
2	0	0	1	0	D	D	E	D
3	0	0	1	1	D	D	E	E
4	0	1	0	0	D	E	D	D
5	0	1	0	1	D	E	D	E
6	0	1	1	0	D	E	E	D
7	0	1	1	1	D	E	E	E
8	1	0	0	0	E	D	D	D
9	1	0	0	1	E	D	D	E
A	1	0	1	0	E	D	E	D
B	1	0	1	1	E	D	E	E
C	1	1	0	0	E	E	D	D
D	1	1	0	1	E	E	D	E
E†	1	1	1	0	E	E	E	D
F	1	1	1	1	E	E	E	E

D = disabled

E = enabled

†Normal position

The tape cassette transport is capable of reading and writing at a tape speed of 7.5 inches per second. The tape cassette capability is supplied with the CYBER 18-30 Timeshare system and may be added to the CYBER 18-20 configuration. Dc power for the tape cassette transport is provided by the processor power source on systems that use the LH power supply. The +12 V dc for the tape transport is provided by separate power supply within the processor on systems that use the Scott power supply. Refer to figure 11-1 for the tape cassette subsystem block diagram. Refer to figures 11-2 and 11-3 plus section 2 for additional processor power supply information.

PARTS AND EQUIPMENT

Parts and Equipment	Equipment Number	Part Number
Tape cassette controller	FA104-A	88908100
Tape cassette transport	BE602-A	88908900
Finalization kit (for transport unit 0)	YA183-A	96744642
Signal cable	--	96744947
Power cable†	--	96753166
Power supply†	GD125-A	96744513
Finalization kit (for transport unit 1)	YA188-A	96753483
Mounting plates		

TEST EQUIPMENT

No special test equipment is required to install the tape cassette capability.

UNCRATING

The tape cassette controller, tape cassette transports, finalization kit, and power supply are shipped in heavy-duty cardboard cartons. The items are buffered against shock and damage by industrial filler materials. No special instructions are required to remove the items from the carton.

CRATING

Refer to the uncrating procedure for crating of items.

INSPECTION

Inspect each item removed from the carton as follows:

1. Check the contents of the carton against the packing list.
2. Examine the tape transport for broken or damaged parts and check that the drive belt is properly attached.
3. Examine the cables for damage to connectors, cable cover, and so forth.
4. Examine the controller and printed circuit board for damaged parts.
5. Examine the power supply for damaged parts.

POWER REQUIREMENTS

The tape cassette controller obtains dc power from the processor dc power supply. On systems that use an LH power supply, the tape cassette transport receives dc power from the processor dc power supply. Systems that contain a Scott power supply in the processor require the installation of an additional power supply and cabling to power the tape cassette transport. This power supply, provided with the tape cassette system, requires 120 V ac, which is obtained from the processor power distribution system. Refer to section 2 for information and identification relevant to the Scott and LH power supply configurations.

POWER SUPPLY INSTALLATION

The following sections describing the power supply power cable, power supply, and testing procedures relate only to systems that contain a Scott power supply configuration in the processor. This installation is not required when an LH power supply is installed in the processor.

POWER CABLE

Ac power for the tape cassette power supply is obtained from the power distribution power sequencer board.

1. Remove power from the system by setting the POWER switch to OFF.
2. Remove the front panel that surrounds the equipment mounting frame. Pull the bottom out to disengage the catches, swing the bottom of the panel forward approximately 30 degrees, and push it up to remove the top of the panel from the hanger bracket.

† These items are required only on systems that use the Scott power supply. Refer to section 2 for additional power supply information.

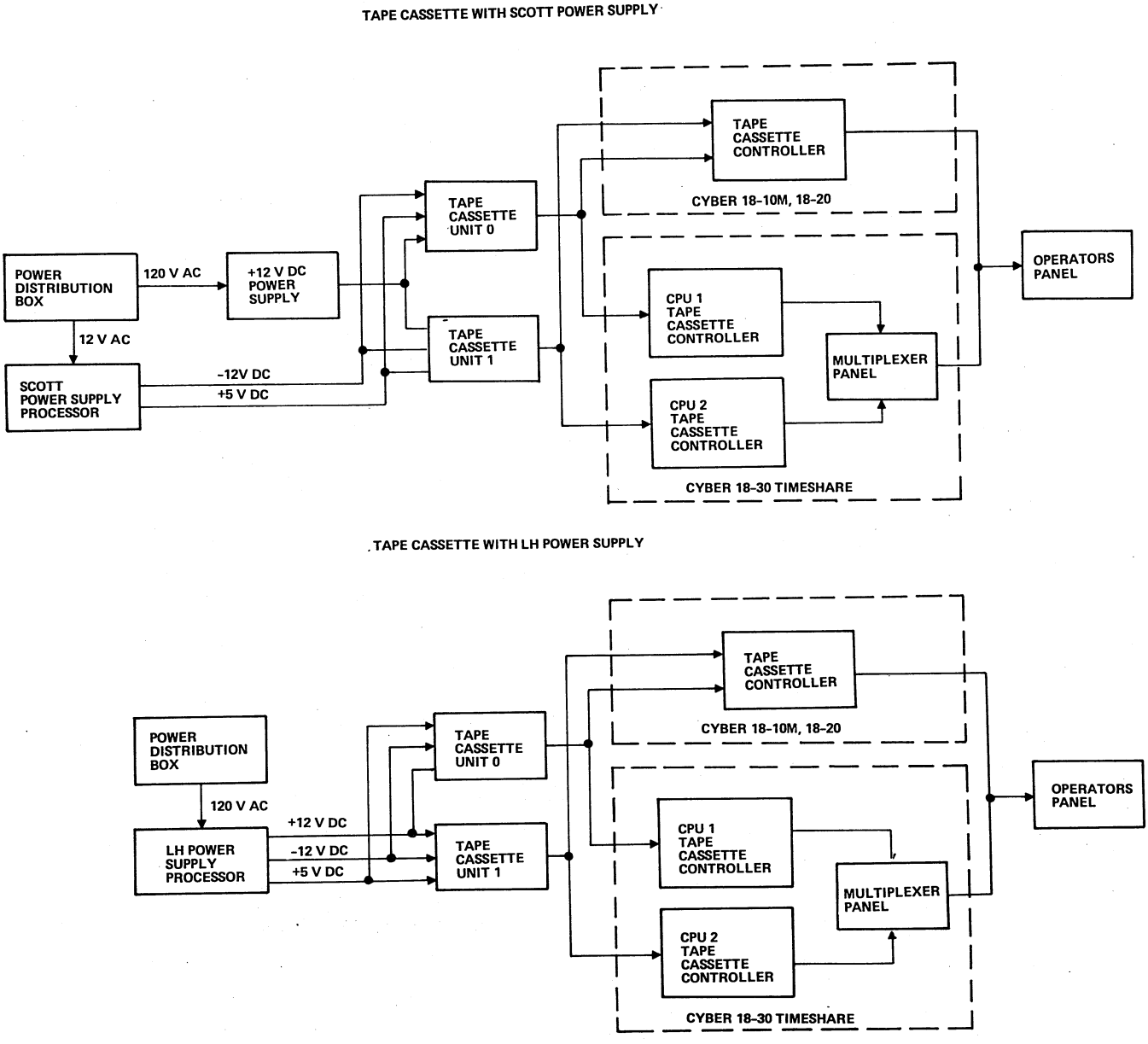

Figure 11-1. Tape Cassette System Block Diagram

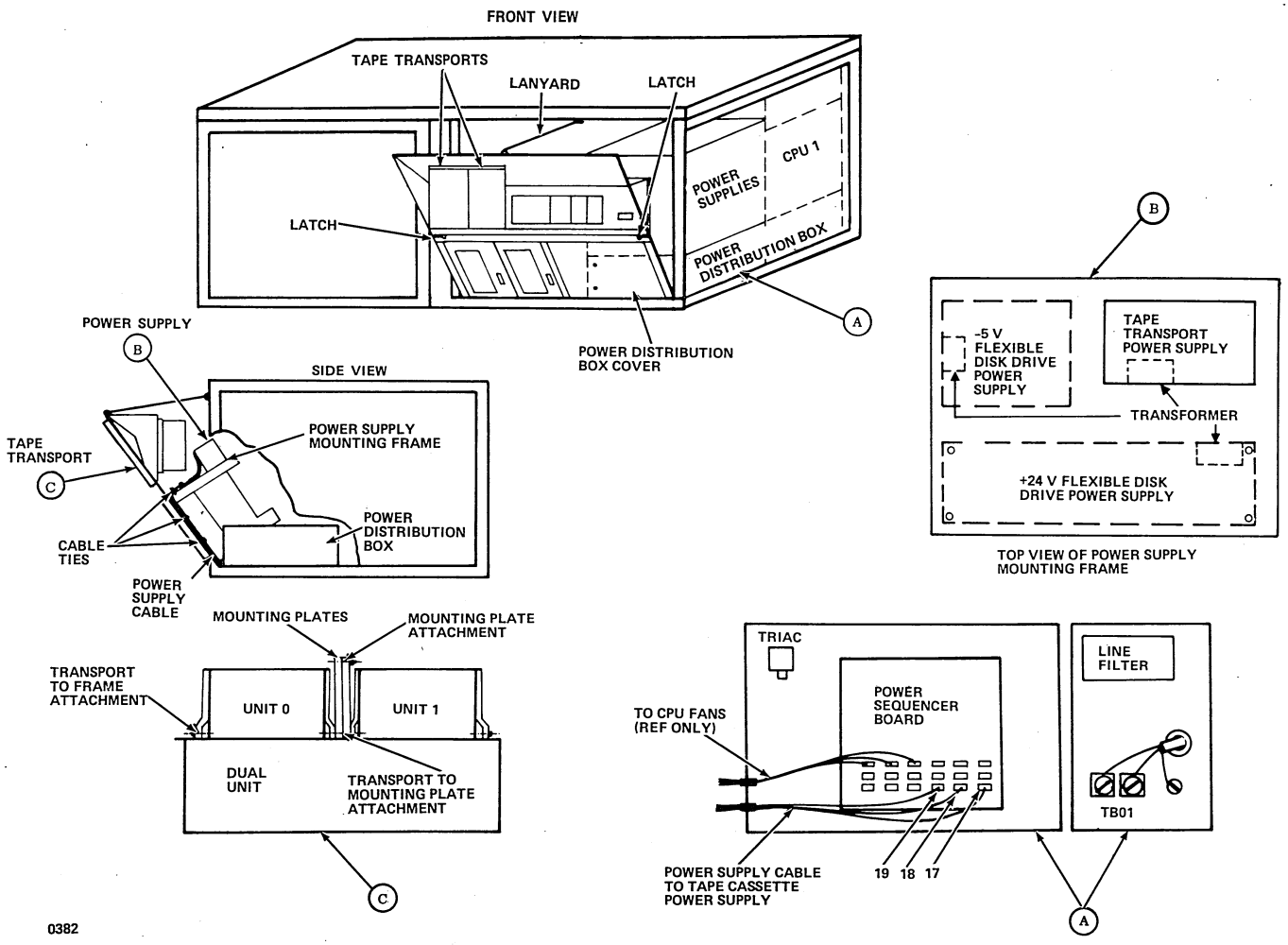

Figure 11-2. Tape Cassette Power Supply and Power Cable Installation for Systems Using the Scott Power Supply

3. Release the latches of the equipment mounting frame (figure 11-2) and pull the frame top forward to the limit of the lanyard.

4. Remove the cover from the power distribution box (figure 11-2).

5. Feed the cable (part number 96753166) through the grommet of the power distribution box and attach the leads to the power sequencer board contacts. Connect the leads to the terminals indicated on the wire tag.

6. Replace the cover and secure it with screws.

POWER SUPPLY

1. Remove the power supply cover from the power supply mounting frame. Place the power supply on the power supply mounting frame as indicated in figure 11-2.

2. Using 8-32 x 3/8 screws and no. 8 lock washers, secure the power supply to the bracket.

3. Connect the other end of the power supply cable to the power supply transformer primary input terminals and chassis. Connect the green lead to the chassis with the screw, washer, and nut. Connect the white lead to terminal 2 and the black lead to terminal 1 of the transformer.

4. Using cable ties, route and tie the cable to the side of the power supply mounting bracket.

TESTING

1. Apply power to the system by placing the POWER switch to the ON position.

2. Using a volt-ohmmeter, check that +12 V dc appears at the power supply output terminals.

3. If the meter indication is less or greater than +12 V dc, adjust the potentiometer clockwise to increase or counterclockwise to decrease the output voltage.

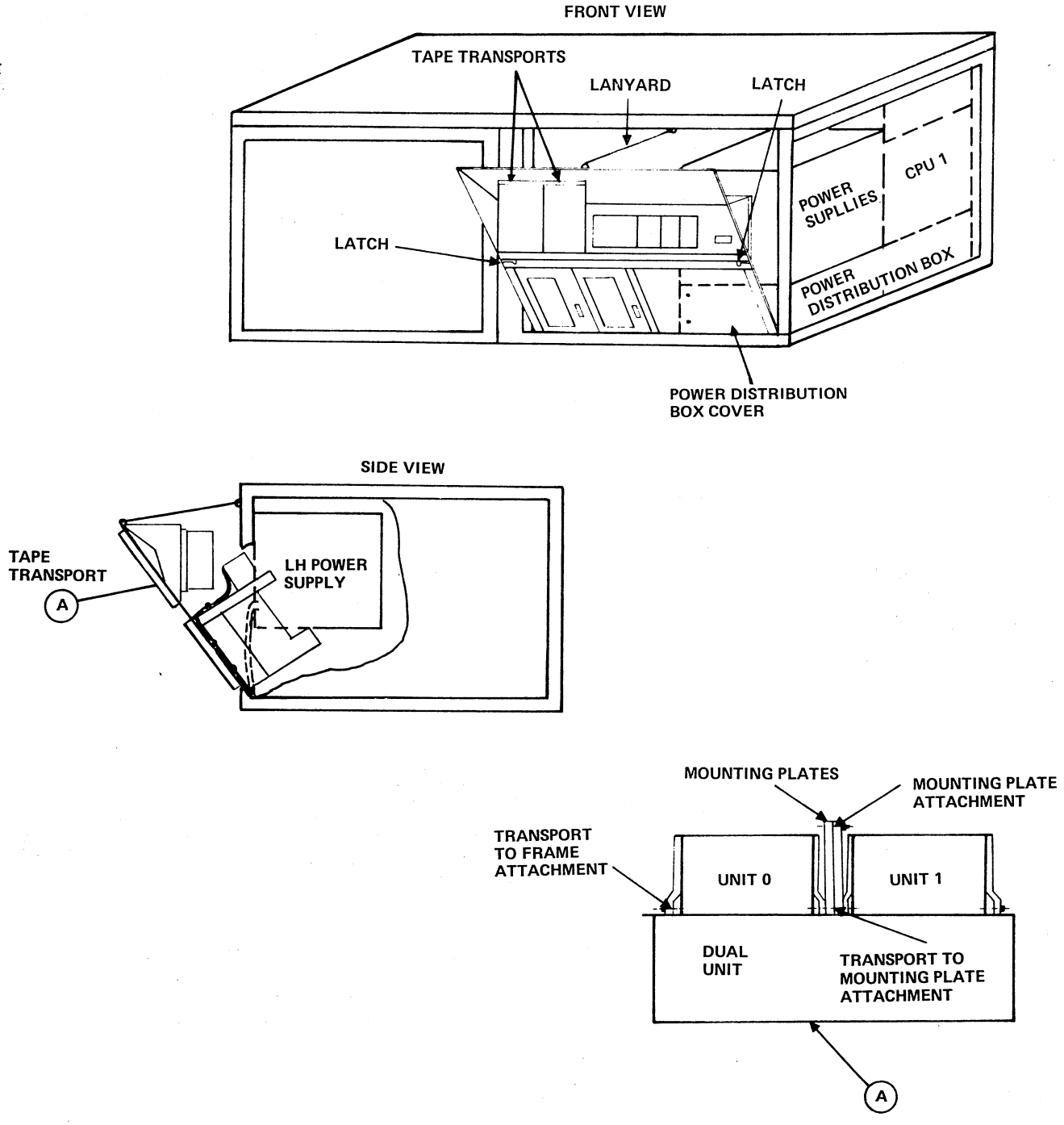

Figure 11-3. Tape Cassette Power Supply Cabling Installation for Systems Using the LH Power Supply

4. If the voltage cannot be adjusted, obtain a replacement power supply.

5. After the correct voltage output indication has been obtained, place the POWER switch to OFF and proceed with the installation of the tape transport.

TAPE TRANSPORT INSTALLATION

SINGLE TAPE TRANSPORT

1. Remove the left-hand filler bracket from the tape transport mounting opening (figure 11-2 or 11-3).

2. Insert the tape transport and attach with 4-40 screws and a no. 4 lock washer.

DUAL TAPE TRANSPORT

1. Using the flathead machine screws, attach the cassette mounting plates (part number 96744946) to each of the two tape transports; one plate to the side of one tape transport and one plate to the right side of the other tape transport (figure 11-2 or 11-3).

2. Remove the two filler brackets from the tape transport mounting opening. Discard the filler brackets.

3. Insert each tape transport (with mounting plates between them) and attach them to the frame with 4-40 screws and no. 4 lock washers.

4. Using two 4-40 pan head screws, no. 4 lock washers, and 4-40 nuts, attach the two mounting plates together at the holes provided.

SIGNAL CABLING

1. Attach the signal cable (P1) to the backplane pins of the tape cassette controller slot as indicated in section 2. Refer to section 1 for slot assignments.

2. Attach the other end (P2) of the cable to the tape transport connectors, ensuring that the cable connected to backplane terminals 1 through 25 connects to unit 0. If only one tape transport is installed, the unit 1 connection plug is left hanging loose.

3. Attach the small CASS connector (P3) to connector J1 on the back of the control panel with the label in view after connecting. Refer to section 2.

4. Attach the red and black wires from the tape transport connector to the contacts of the tape cassette power supply. Attach the red leads to +12 V dc and the black leads to +12 V dc return (ground). (Required only on systems using a Scott power supply.) On systems that use an LH power supply, connect the power supply leads to the processor LH power supply +12 V dc and +12 V dc return terminals.

5. Replace the power supply cover. (Required only on systems using Scott power supply.)

TAPE CASSETTE CONTROLLER INSTALLATION

SWITCH VERIFICATION

Verify that the equipment code and function control switches are set in accordance with the system requirements. Refer to figure 11-4.

1. Verify that the equipment code switches (location M10) are set per system application.

2. Set the function control switches (location H1) to select the applicable system operation. Refer to figure 11-4 for switch assignment and function.

CONTROLLER INSERTION

CAUTION

Damage to the board may result if it is inserted in the wrong slot. (See section 1 for slot assignments).

1. Remove the right side panel from the cabinet by pulling the bottom free of the latch and raising the panel to free the top hanger.

2. Remove the dust cover from the processor and chassis.

3. After verifying the equipment code and function code switches insert the controller into the assigned slot (specified in section 1), ensuring that the components are to the left. After the board is inserted, apply firm pressure at the upper and lower corners to properly seat the board in the backplane connector.

4. After the board is inserted and the signal cables are connected, replace the dust cover, close the equipment frame, and replace the panels.

DIAGNOSTIC TESTING

Perform manual and diagnostic checks according to the diagnostic decision logic tables in the system hardware maintenance manual.

NOTE

The diagnostic tests and routines described in the system hardware maintenance manual can only be performed after the console display, processor, and flexible disk drive or tape cassette (diagnostic load device) installations are complete.

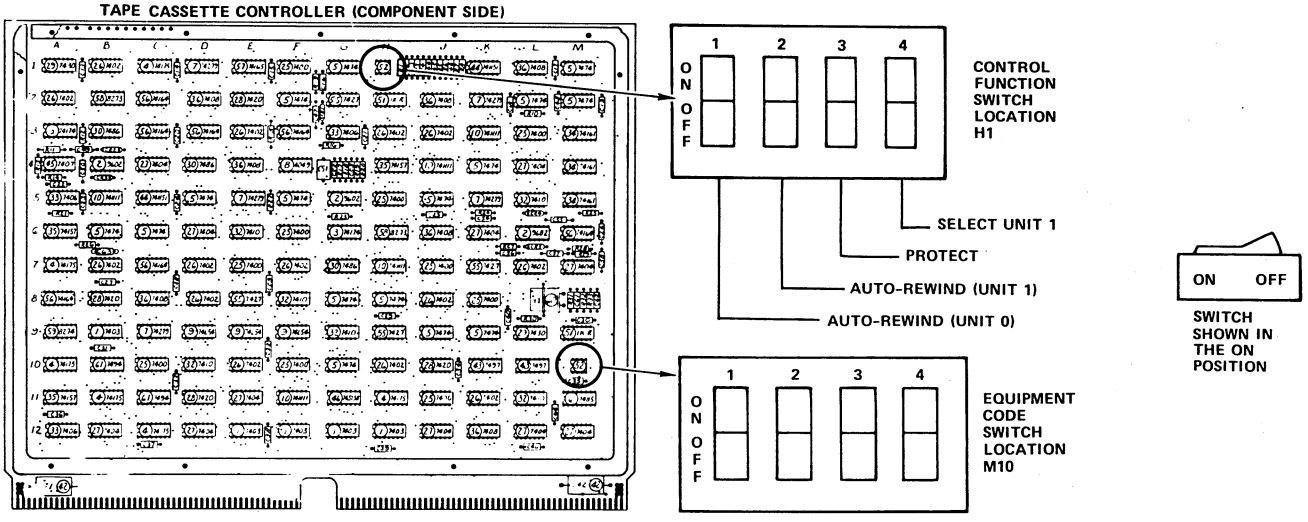

EQUIPMENT CODE SELECT (LOCATION M10)

EQUIPMENT CODE (HEXADECIMAL)	SWITCH SETTING			
	1	2	3	4
1	ON	ON	ON	OFF
2	ON	ON	OFF	ON
3	ON	ON	OFF	OFF
4	ON	OFF	ON	ON
5	ON	OFF	ON	OFF
6	ON	OFF	OFF	ON
7†	ON	OFF	OFF	OFF
8	OFF	ON	ON	ON
9	OFF	ON	ON	OFF
A	OFF	ON	OFF	ON
B	OFF	ON	OFF	OFF
C	OFF	OFF	ON	ON
D	OFF	OFF	ON	OFF
E	OFF	OFF	OFF	ON
F	OFF	OFF	OFF	OFF

†NORMAL OPERATING POSITION

1358-1

CONTROL FUNCTIONS (LOCATION H1)

POSITION	SWITCH 1	SWITCH 2	SWITCH 3	SWITCH 4
ON	AUTO-REWIND ENABLED (UNIT 0)	AUTO-REWIND ENABLED (UNIT 1)	SELECTS PROTECTED MODE	SELECTS UNIT 1
OFF	AUTO-REWIND INHIBITED (UNIT 0)	AUTO-REWIND INHIBITED (UNIT 1)	SELECTS UNPROTECTED MODE	NORMAL UNIT SELECTION OCCURS

Figure 11-4. Tape Cassette Transport Controller Equipment and Function Code Switches

The flexible disk drive is a random-access data storage subsystem that utilizes removable diskettes. The subsystem is capable of controlling data transfer between the processor and two flexible disk drives. The diskettes can be formatted to use either CDC modified 1700 format or IBM format.

Refer to figure 12-1 for the flexible disk drive subsystem block diagram. Refer to section 2 for additional processor power supply information.

The flexible disk drive subsystem can be installed in the CYBER 18-10M, 18-20, 18-25, or 18-30 system. In many systems, the flexible disk drive subsystem is installed at the factory and only requires field verification of equipment code and function switch positions. This procedure should be used when the flexible disk drive subsystem is to be added by field installation personnel.

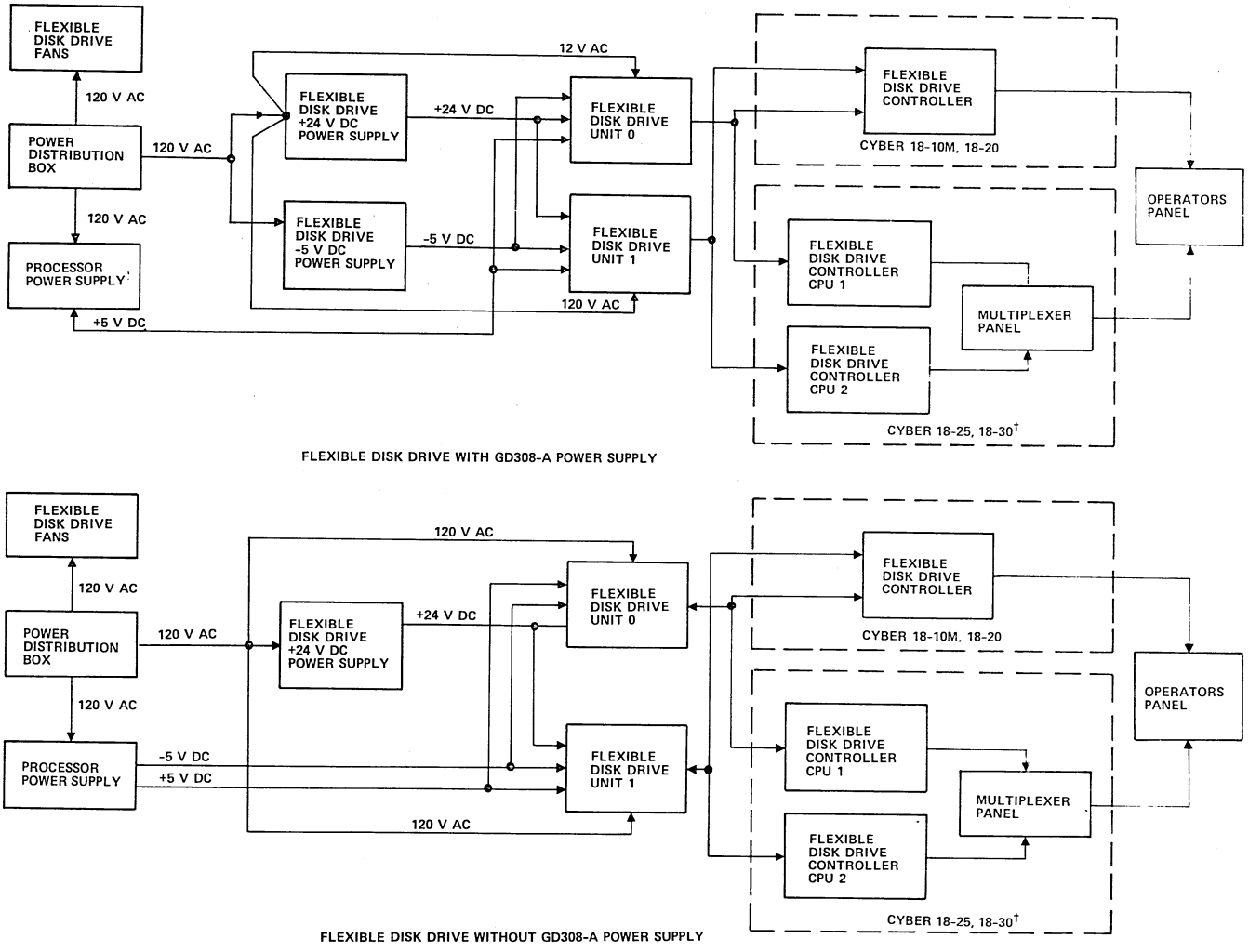

†FLEXIBLE DISK DRIVE IS AN OPTIONAL EQUIPMENT ON CYBER 18-30 SYSTEMS.

0760-2

Figure 12-1. Flexible Disk Drive Subsystem Block Diagram

PARTS AND EQUIPMENT

Parts and Equipment	Equipment Number	Part Number
Flexible disk drive controller	FA730-A	96755600
Flexible disk drive	BR803-U	75744052
Finalization kit (unit 0)	YA137-A or BT289-A or BT289-B	96744499 or 96750972 or 96750979
Power supplies	GD308-A GD130-A	96753448 96750986
Finalization kit (unit 1)	YA138-A or BT290-A	96744502 or 96750978

TOOLS REQUIRED

Installation of the exhaust fans requires that one side of the cabinet be raised 4 to 6 inches (100 to 150 millimeters). Therefore, a lifting device similar to a roller lift is required. Tools required to install the flexible disk drive subsystem include the following:

- Roller lift or equivalent
- 6-inch machinist scale (for 50/60 Hz conversion)
- Stubby Phillips screwdriver
- Hex wrench (for 50/60 Hz conversion)
- Medium Phillips screwdriver
- 5/16-inch box/end wrench
- 1/4-inch box/end wrench

UNCRATING

The flexible disk drive controller, flexible disk drives, power supplies, and finalization kits are shipped in heavy-duty cardboard cartons. The items are buffered against shock and damage by industrial filler materials. No special instructions are required to remove the items from the carton.

CRATING

Refer to the uncrating procedure.

INSPECTION

Inspect each item removed from the carton as follows:

1. Check the contents of the carton against the packing list.
2. Examine the flexible disk drives for broken or damaged parts.
3. Check that the flexible disk drive dual-diameter pulley is properly installed to accommodate the site power frequency (figure 12-2).
   a. The pulley is installed with the small diameter closest to the motor where 60 Hz source power is present.
   b. The pulley is installed with the large diameter closest to the motor where 50 Hz source power is present.
   c. If the pulley is incorrectly installed, refer to the flexible disk drive frequency conversion procedure.
4. Examine the cables for damage to the connectors, cable cover, and so forth.
5. Examine the flexible disk drive controller for damage.
6. Examine the power supplies for damaged parts.

POWER REQUIREMENTS

Refer to section 1 for the ac power requirement. The flexible disk drive receives +5 V dc power from the processor dc power source. The -5 V dc power for the flexible disk drive is provided by the processor dc power source, and the +24 V dc power is provided by a separate power supply on systems that do not employ the GD308-A Power Supply. The -5 V dc and +24 V dc power for the flexible disk drive is provided by the GD308-A Power Supply on systems that employ the GD308-A Power Supply. The flexible disk drive obtains 120 V ac power from the processor power distribution box via the primary contacts of the power supply transformers. The exhaust fans obtain 120 V ac power directly from the power distribution box.

POWER SUPPLY AND FAN INSTALLATION

POWER SUPPLY POWER CABLE

Ac power for the flexible disk drive power supplies is obtained from the power distribution box power sequencer board (figures 12-3 and 12-4).

1. Remove power from the system by setting the POWER switch to OFF.
2. Remove the front panel that surrounds the equipment mounting frame. To disengage the catches, pull the bottom forward, swing the bottom of the panel forward approximately 30 degrees, and push the panel up to remove it from the top hanger bracket.
3. Release the latches of the equipment mounting frame (figure 12-3 or 12-4), and pull the frame top forward to the limit of the lanyard.

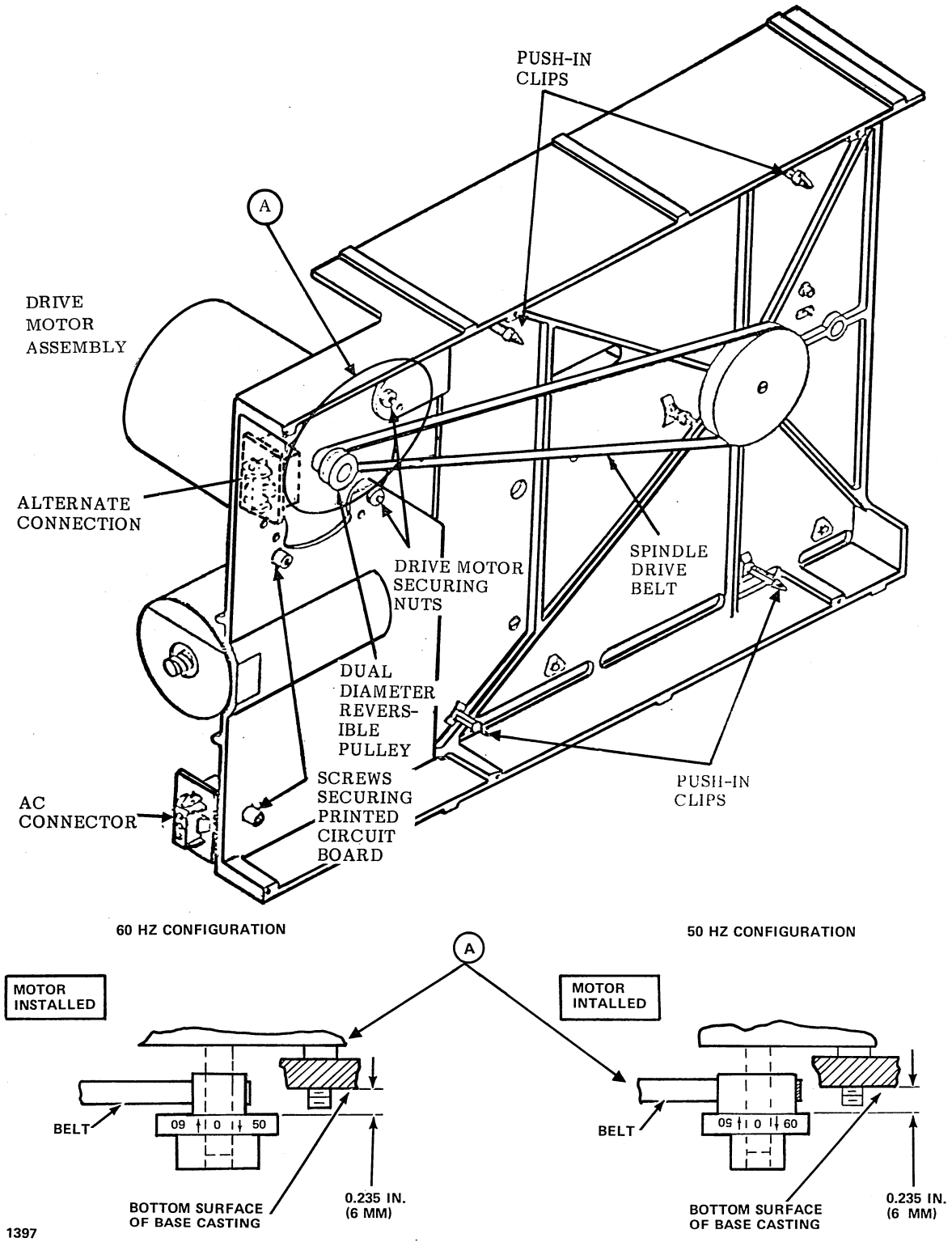

Figure 12-2. Drive Pulley Reversal

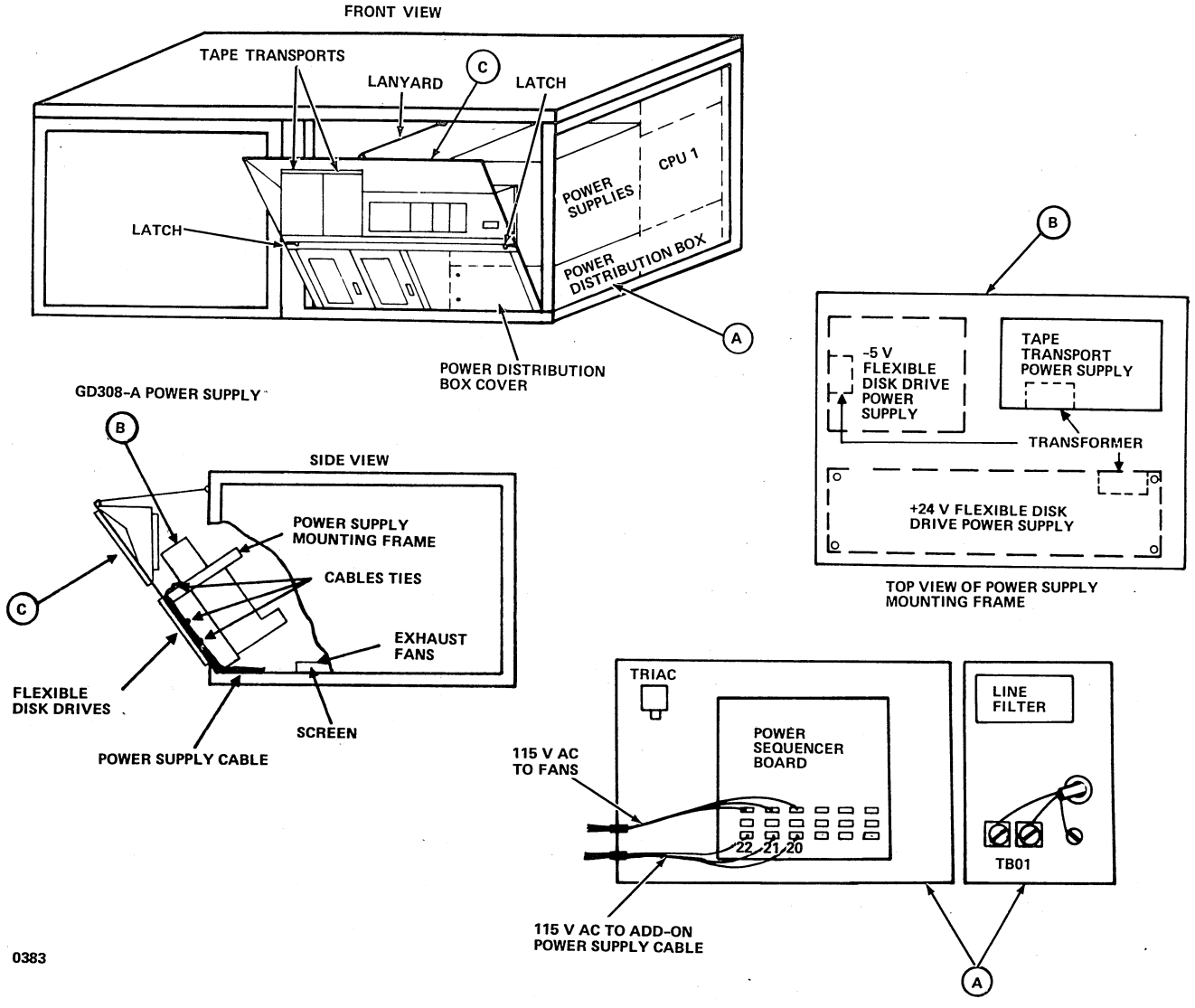

Figure 12-3. Flexible Disk Drive Power Supplies and Power Cabling for Systems with GD308-A Power Supply

4. Set the circuit breaker located on the power distribution box to OFF. Remove the system ac power cable from the primary power source.

CAUTION

Primary power is present within the circuit breaker portion of the power distribution box even with the circuit breaker OFF.

5. Remove the power distribution box cover (figure 12-3 or 12-4).

6. Feed the power distribution box end of the cable through the grommet and attach it to the power sequencer board contacts. Connect the leads to the terminals indicated on the wire tag.

EXHAUST FANS

A roller lift and safety blocks or equivalent device is required to raise the cabinet 4 to 6 inches (100 to 150 millimeters) to accommodate attachment of the exhaust fan drip pan (screen).

1. Remove and discard the cover plate attached to the floor of the cabinet in the area immediately behind the flexible disk drive mounting facilities.

2. Using the lifting device, raise the front of the cabinet 4 to 6 inches (100 to 150 millimeters).

3. Using two 6-32 x 1-1/4 inch screws, no. 6 flat and lock washers, and sleeve spacers, attach the screen to the undersde of the cabinet floor using two diagonal mounting locations. Place the screen with the flanges up.

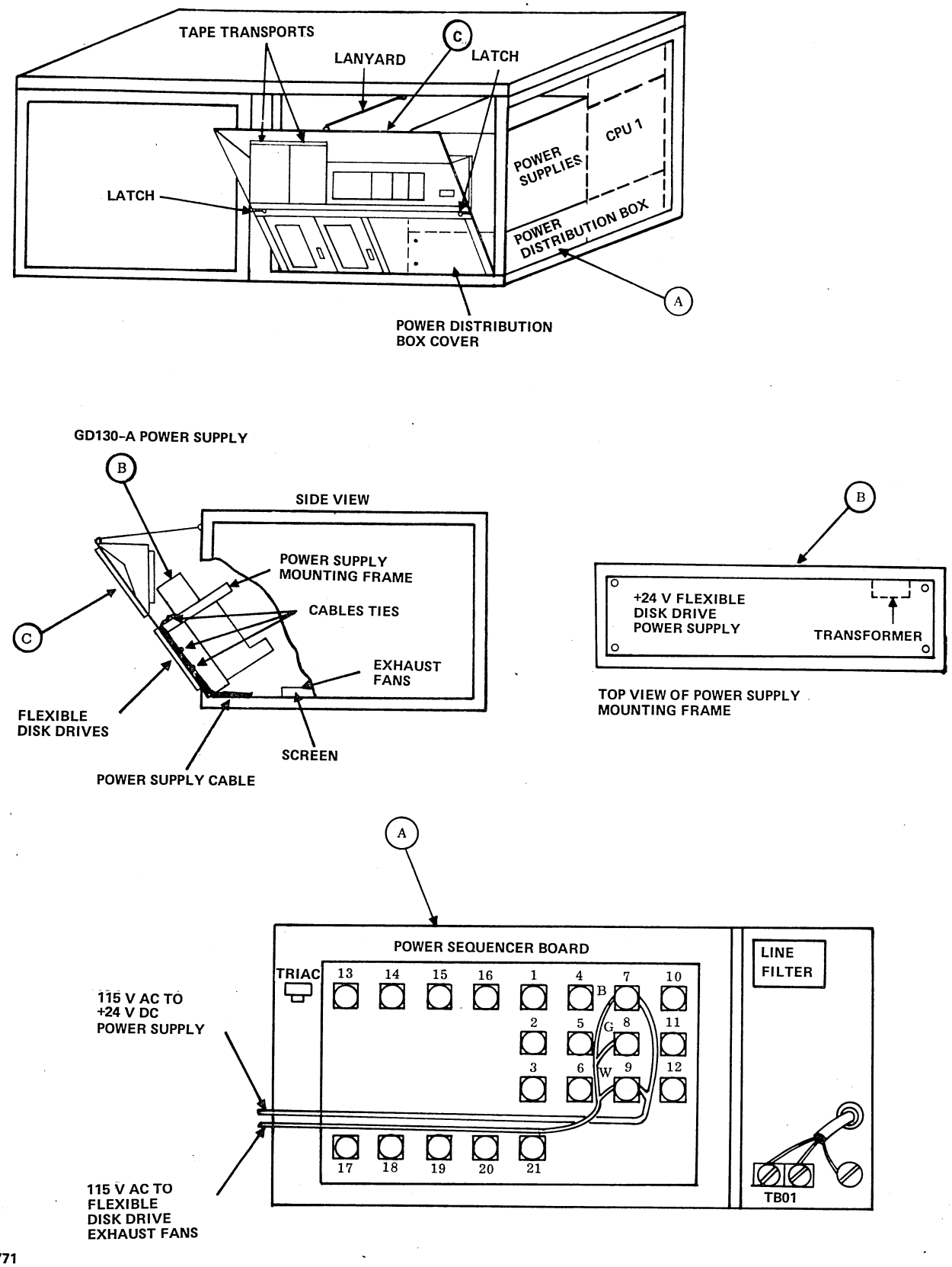

Figure 12-4. Flexible Disk Drive Power Supply and Power Cabling for Systems

4. Lower the cabinet and remove the lifting device.

5. Using four 6-32 x 2-inch screws and no. 6 flat and lock washers, attach the fan grills and fans to the diagonal, threaded holes not used by the screen mounting screws. Ensure that the grill is on top of the fan, that the air flow arrow points toward the floor, and that the connector terminals are nearest the right front corner of the cabinet.

6. Select the fan power cable from the kit.

7. Feed the terminals through the power distribution box grommet. Attach to the terminals as illustrated in figure 12-3 or 12-4.

8. Attach the fan cords to the fans and the fan power cable.

9. Replace the cover of the power distribution box and make certain it is secure.

POWER SUPPLIES

1. Remove the power supply cover located above the drive housing.

2. Using the 8-32 thread-roll screws provided, attach the +24 V power supply to the power supply mounting frame (figure 12-3 or 12-4).

3. On systems with the GD308-A Power Supply, attach the -5 V power supply to the power supply mounting frame (figure 12-3).

CAUTION

Check that the transformer primary terminals are connected for 115-volt operation.

4. For a CYBER 18-10M or 18-20 system that does not use a GD308-A Power Supply, the power cable is routed up along the right side of the drive mounting facility. For all other configurations, the power cable is routed up along the left side.

5. Connect the flexible disk drive power supply ends of the power cable from the power distribution box to each power supply as follows:

   Green lead to the power supply mounting screw

   White lead to terminal 4 of the transformer

   Black lead to terminal 1 of the transformer

The double-lead terminals on the GD308-A power cable connect to the -5 V power supply.

TESTING

1. Connect the power cable to the primary power source, and apply power to the system by placing the circuit breaker and POWER switch ON.

2. Observe that the exhaust fans are rotating.

3. Using a volt-ohmmeter, check that +24 V dc appears at the output terminals of the 24 V dc power supply.

4. Check that -5 V dc appears at the output terminals of the -5 V dc power supply on systems that have a GD308-A Power Supply.

5. If either voltage is less or greater than stated in steps 3 and 4, adjust the associated voltage adjust potentiometer on the power supply assembly. Rotate clockwise to increase and counterclockwise to decrease the output voltage.

6. If the correct voltage indication cannot be obtained, replace the power supply.

7. After the correct voltage has been obtained, set the POWER switch to OFF and proceed with the installation of the flexible disk drives.

FLEXIBLE DISK DRIVE INSTALLATION

SINGLE DRIVE

1. Remove the left-hand filler bracket from the flexible disk drive mounting opening. Remove the ac power cord from the primary source.

2. Insert the flexible disk drive with the logic board toward the right, and attach it with the three no. 10 hexagon head screws and no. 10 flat and lock washers provided.

3. For systems using the GD308-A Power Supply, attach the flexible disk drive power cable from the flexible drive ac input connector to the -5 V power supply transformer primary winding terminals and frame. For other systems, attach the cable to the +24 V power supply transformer primary winding terminals and frame. The existing wires to the transformer must be moved to the piggyback tabs of this cable.

   Green lead to a power supply mounting screw

   White lead to terminal 4 of the transformer

   Black lead to terminal 1 of the transformer

4. Using cable ties, secure the power cables to the frame and power supplies.

DUAL DRIVE

1. Remove both filler brackets from the flexible disk drive mounting openings. Remove the ac power cord from the primary source.

2. Insert the two flexible disk drives with the logic board of each drive toward the right, and attach each drive with the three no. 10 hexagon-head screws and no. 10 flat and lock washers provided.

3. Attach one flexible disk drive power cable from the flexible disk drive power input connector to the +24 V dc power supply transformer primary winding terminals and frame. Refer to step 3 of the single flexible disk drive installation above for connections.

4. On systems that have a GD308-A Power Supply, attach the other flexible disk drive power cable from the flexible disk drive power input connector to the -5 V dc power supply transformer primary winding terminals and frame. Refer to step 3 of the single flexible disk drive installation above for connections.

5. On systems that do not have a GD308-A Power Supply, attach the other flexible disk drive power cable from the flexible disk drive power input connector to the +24 V dc power supply transformer primary winding terminals and frame along with the power cable from the first unit. Refer to step 3 of the single flexible disk drive installation above for connections.

6. Using cable ties, secure the power cables to the frame of the power supplies.

FREQUENCY CONVERSION

This procedure outlines the processes necessary to convert the flexible disk drive unit for operation from ac power circuits of 120 V, 50 or 60 Hz. The conversion is accomplished by reversing the dual diameter drive pulley on the drive motor shaft (figure 12-2).

1. Remove the printed wiring assembly from the flexible disk drive unit.

   a. Disconnect the four cable connectors along the edge of the printed wiring assembly.

   b. Remove the two screws adjacent to the signal connector that secure the printed wiring assembly.

   c. Apply slight pressure to the board at each of the four nylon push-in clips individually while pressing the wedge hook into the center of the push-in clip.

2. Remove the belt from the drive motor pulley.

3. Loosen the set screw and remove the pulley from the shaft.

4. Reverse the pulley and replace it on the shaft.

5. Position the pulley on the shaft, allowing a tolerance of 15/64 inch (6 millimeters) between the base of the motor and the pulley edge adjacent to the motor. Refer to figure 12-2.

6. Tighten the pulley set screw.

7. Replace the belt and printed wiring assembly.

8. Reconnect the four cable connectors to the printed wiring assembly.

BACKPLANE WIRING

For interrupt installation, refer to section 20.

CABLING

SINGLE DRIVE

1. Attach the signal cable for unit 0 to the processor backplane pins of the flexible disk drive controller slot as indicated in section 2 for the applicable system.

2. Attach the other end of the cable to the flexible disk drive and secure it with the two fasteners.

3. Attach the two ring terminal wires to the +5 V and +5 V RET output terminals of the processor +5 V dc power supply to the right of the drive. Attach the red lead to the +5 V terminal and the black lead to the +5 V RET terminal.

4. Attach the slide contacts of the red and black wires to the output terminals of the +24 V power supply, the red lead to the +OUT terminal, and the black lead to the -OUT terminal.

5. On systems that have the GD308-A Power Supply, attach the slide contacts of the blue and black wires to the output terminals of the -5 V dc flexible disk drive power supply, the blue lead to the -OUT terminal, and the black lead to the +OUT terminal.

   On systems that do not have the GD308-A Power Supply, attach the two ring terminal wires to the -5 V dc processor power supply, the blue lead to the -OUT terminal, and the black lead to the +OUT terminal.

6. Attach the control/indicator cable CPU connector to the flexible disk drive controller processor backplane pins as indicated in section 2 for the applicable system.

7. Attach the panel connector to J2 of the control panel or J11 of the dual-CPU multiplexer as indicated in section 2 for the applicable system.

8. Dress and tie all cables to avoid damage when the equipment frame is closed. Ensure that cables do not block the fan grills.

9. Replace the power supply cover.

10. Connect the 7-inch (178-millimeter) ground wire from the flexible disk drive cable assembly to the rear of the flexible disk drive housing assembly. Use the existing power supply cover mounting hardware.

DUAL DRIVE

1. Complete steps 1 through 7 of Single Drive above to install unit 0.

2. Attach the signal cable for unit 1 to the processor backplane pins of the flexible disk drive controller slot as indicated in section 2 for the applicable system.

3. Attach the other end of the cable to the flexible disk drive unit 1 and secure it with the two fasteners.

4. Connect the unit 1 power cabling as outlined in steps 3, 4, and 5 of Single Drive above using the same terminals as unit 0 for ring connectors or the adjacent SENSE terminals for slide connectors..

5. For CYBER 18-25 and 18-30 systems, connect the second control/indicator cable as indicated in section 2 for backplane cabling.

6. Dress and tie all cables to avoid damage when the equipment frame is closed.

7. Replace the power supply cover.

8. Connect the 7-inch (178-millimeter) ground wires from the flexible disk drive cable assemblies to the rear of the flexible disk drive housing assembly. Use the existing power supply cover mounting hardware.

FLEXIBLE DISK DRIVE CONTROLLER INSTALLATION

SWITCH VERIFICATION

Verify that the flexible disk drive controller equipment code and program protect switches (location G8) are set according to system requirements. Refer to figure 12-5.

1. Verify that switches 1 through 3 are set to OFF. These switches are not currently used.

2. Set program protect switch 4 per system application. The equipment is protected when the switch is in the ON position.

3. Verify that equipment code switches 5 through 8 are set per system application.

CONTROLLER INSERTION

CAUTION

Damage to the board may result if it is inserted in the wrong slot. (See section 1 for slot assignments.)

1. Remove the outside panel from the cabinet by pulling the bottom free of the catches and raising the panel to free the top hanger.

2. Remove the dust cover from the processor chassis.

3. After equipment code and program protect switches have been verified, insert the controller into the assigned slot, ensuring that the components are to the left. After the board is inserted, apply firm pressure at the upper and lower corners to assure that the board is properly seated in the backplane connector.

4. After the board is inserted and the signal cables are connected, replace the dust cover, close the equipment frame, and replace the panels.

DIAGNOSTIC TESTING

Perform manual and diagnostic checks in accordance with the diagnostic decision logic tables in the system hardware maintenance manual.

NOTE

The diagnostic tests and routines described in the system hardware maintenance manual can only be performed after the console display, processor, and flexible disk drive or tape cassette (diagnostic load device) installations are complete.

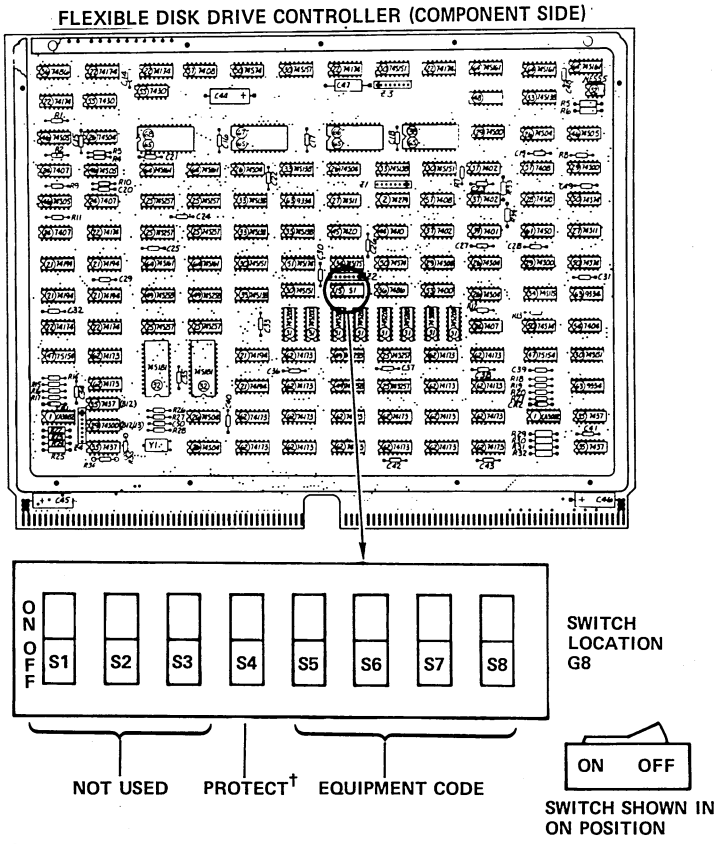

†THE NORMAL OPERATING POSITION IS ON.

ADAPTER SWITCHES (LOCATION G8)

EQUIP-MENT (Q10-Q7)	S5	S6	S7	S8
0	ON	ON	ON	ON
1	ON	ON	ON	OFF
2	ON	ON	OFF	ON
3	ON	ON	OFF	OFF
4	ON	OFF	ON	ON
5	ON	OFF	ON	OFF
6	ON	OFF	OFF	ON
7 ††	ON	OFF	OFF	OFF
8	OFF	ON	ON	ON
9	OFF	ON	ON	OFF
A	OFF	ON	OFF	ON
B	OFF	ON	OFF	OFF
C	OFF	OFF	ON	ON
D	OFF	OFF	ON	OFF
E	OFF	OFF	OFF	ON
F	OFF	OFF	OFF	OFF

††NORMAL OPERATING POSITION

0990-1

Figure 12-5. Flexible Disk Drive Controller Switches

The CYBER 18-25 and 18-30 system communication multiplexer subsystem provides two to sixty-four asynchronous communication channels. This subsystem comprises:

- A communication interface (three multiplexer loop interface adapter printed wiring assemblies) that is located in the communication processor chassis
- A loop multiplexer (chassis, multiplexer logic printed wiring assembly, and blower assembly) that is housed in the GH447-D Equipment Cabinet below the magnetic tape transport or in the GH461-A Equipment Cabinet
- A power supply that provides the dc operating voltages (+5 V dc, +12 V dc, and -12 V dc) for the loop multiplexer that is housed in the equipment cabinet
- Two cables that provide interface between the communication interface and the loop multiplexer
- One to sixteen asynchronous two-channel communication line adapters (ACLA) that are installed in the loop multiplexer chassis

An additional loop multiplexer chassis and an equipment cabinet are required for expansion to 32 communication line adapters (64 channels). The 10431-1 Communication Multiplexer Expansion option provides this capability.

Figure 13-1 depicts a typical communications multiplexer subsystem block diagram.

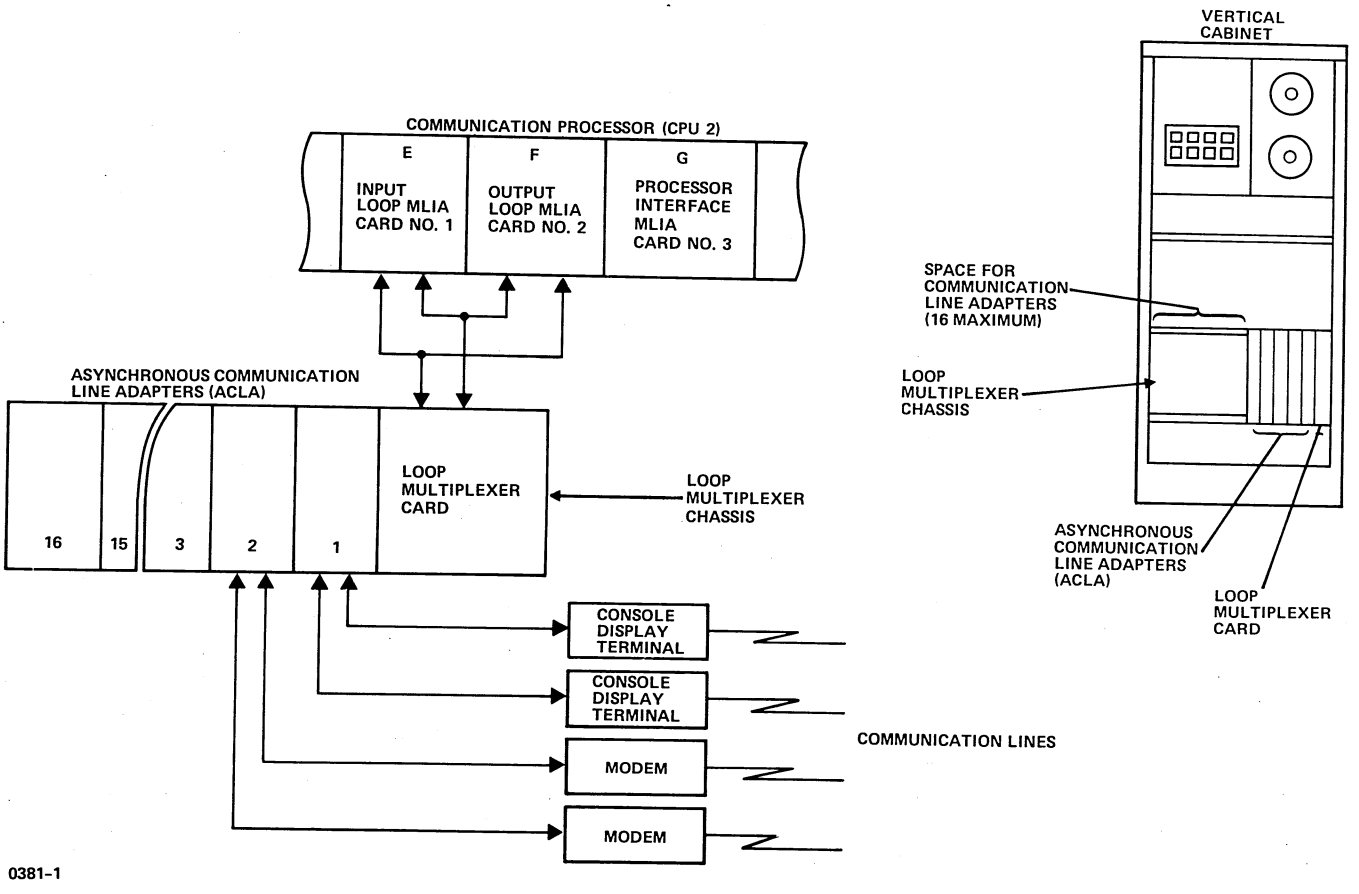

Figure 13-1. Typical Communications Multiplexer Subsystem Block Diagram

PARTS AND EQUIPMENT

Parts and Equipment	Equipment Number	Part Number
Multiplexer loop interface adapter	DY192-A	74873638
MLIA no. 1 (input loop)		74872399
MLIA no. 2 (output loop)		74872408
MLIA no. 3 (processor interface)		74372417
Cable assembly (processor to loop multiplexer)		96753600
Cable assembly (processor to loop multiplexer)		96753601
Cable assembly (loop multiplexer to loop multiplexer)		74873941
Communication line expansion	DY198-A	74874058
Loop multiplexer		74411901
Asynchronous communication line adapter	DU137-A	74490300
Cable assemblies (asynchronous communication line adapter to modem/terminal)†		(Refer to table 13-1)
Equipment cabinet, dc power supply and fans	GH447-D or GH461-A	96750755 88801353

TOOLS AND TEST EQUIPMENT

No special tools or test equipment are required to install the communication expansion subsystem. Refer to section 1 for general use tools.

UNCRATING

The loop multiplexer is factory installed in the equipment cabinet. Refer to the magnetic tape transport section for uncrating procedures.

INSPECTION

Inspect the loop multiplexer chassis, power supply, and cables for physical damage to frames, printed wiring assemblies, connectors, cables, and so forth.

POWER REQUIREMENTS

The multiplexer loop interface adapters reside in the communication processor and obtain dc power via the processor backplane.

The loop multiplexer power supply resides in the equipment cabinet and receives 120 V ac, 50/60 Hz power via the cabinet power distribution box (refer to section 1).

POWER CABLING

The power distribution box of the equipment cabinet is provided with a power cord. Verify that the site power source voltage and frequency agrees with the equipment label values. If they agree, connect the power cord to the site power source receptacle. Using a volt-ohmmeter, test ac power with the power switch ON, ensuring that the input power between 104 and 127 V ac is maintained. Also

TABLE 13-1. LINE ADAPTER CABLE ASSEMBLIES

Cable Assembly Number	Application	Connector to Modem	Connector to Communication Line Adapter
746577xx†	Compatible with AT&T 103/113 data sets	25-contact plug (male)	25-contact socket (female)
746579xx†	Connects to console display terminal via cable (figure 13-4)	25-contact socket (female) with threaded retaining spacers	25-contact socket (female)
746583xx†	Compatible with AT&T 103F, 202R data sets or CDC telegraphic level converter or equivalent modem	25-contact plug (male)	25-contact socket (female)

†xx of the cable assembly number denotes cable length per customer requirement.

†For information on customer fabricated cable assemblies, refer to the CYBER 18 Site Planning Kit listed in the preface.

test dc power supply output at the power supply terminal strip. The dc voltages as marked should be obtained. If dc voltages are less or greater than 5 percent of the marked value, adjust the associated potentiometer to correct output.

SIGNAL CABLING

SINGLE LOOP MULTIPLEXER SYSTEM

See figure 13-2 for the loop multiplexer card to processor backplane signal cable installation.

1. Connect the signal cable (part number 96753601) between J1 of the loop multiplexer card and backplane pins 82 through 85 of slot F and 276 through 279 of slot E, as indicated on the connectors.

2. Connect the signal cable (part number 96753600) between J2 of the loop multiplexer card and backplane pins 78 through 81 of slot F and 80 through 83 of slot E, as indicated on the connector.

3. Attach the cable shield U-bolts around the cable shields at the processor and equipment cabinet cable entry facilities. More than one cable can be clamped by a U-bolt.

DUAL LOOP MULTIPLEXER SYSTEM

See figure 13-3 for dual loop multiplexer cards to the processor backplane signal cable installation.

1. Connect the signal cable (part number 96753601) between J1 of the first loop multiplexer card and backplane pins 82 through 85 of slot F and pins 276 through 279 of slot E, as indicated on the connectors.

2. Connect the signal cable (part number 96753600) between J2 of the second loop multiplexer card and backplane pins 78 through 81 of slot F and pins 80 through 83 of slot E, as indicated on the connectors.

3. Connect the signal cable (part number 74873941) between J2 of the first loop multiplexer card and J1 of the second loop multiplexer card. The P1 end of the cable connects to J1 and P2 connects to J2.

4. Attach the cable shield U-bolts around the cable shields at the processor and equipment cabinet cable entry facilities. More than one cable can be clamped by one U-bolt.

ASYNCHRONOUS COMMUNICATION LINE ADAPTER (2561-1) TO CONSOLE DISPLAY TERMINAL

See figure 13-4 for the asynchronous communication line adapter to console display terminal signal cable installation.

1. Route the signal cable (part number 746579xx), using the cable end with the 25-contact female socket, through the bottom left rear side of the equipment cabinet, through the cutout openings and under the blower assembly of the loop multiplexer chassis (see figure 13-4).

2. Connect the 25-contact female socket routed in step 2 to the appropriate connector (CLA1 or CLA2) on the card handle of the selected asynchronous communication line adapter at the front of the loop multiplexer chassis. Leave enough slack in the cable so that the connector wires are not crimped and secure the cable connector to the card connector with the screws provided (see figure 13-4).

3. Route the other cable end as required by site layout. Connect the 25-contact female socket with threaded retaining spacers to the 25 contact male plug of the console display terminal signal cable (part numer 61406100). Secure these two connectors with the two screws provided.

DIAGNOSTIC TESTING

Perform the manual and diagnostic checks according to the diagnostic decision logic tables in the system hardware maintenance manual.

NOTE

The diagnostic tests and routines described in the system hardware maintenance manual can only be performed after the console display, processor, and flexible disk drive or tape cassette (diagnostic load device) installations are complete.

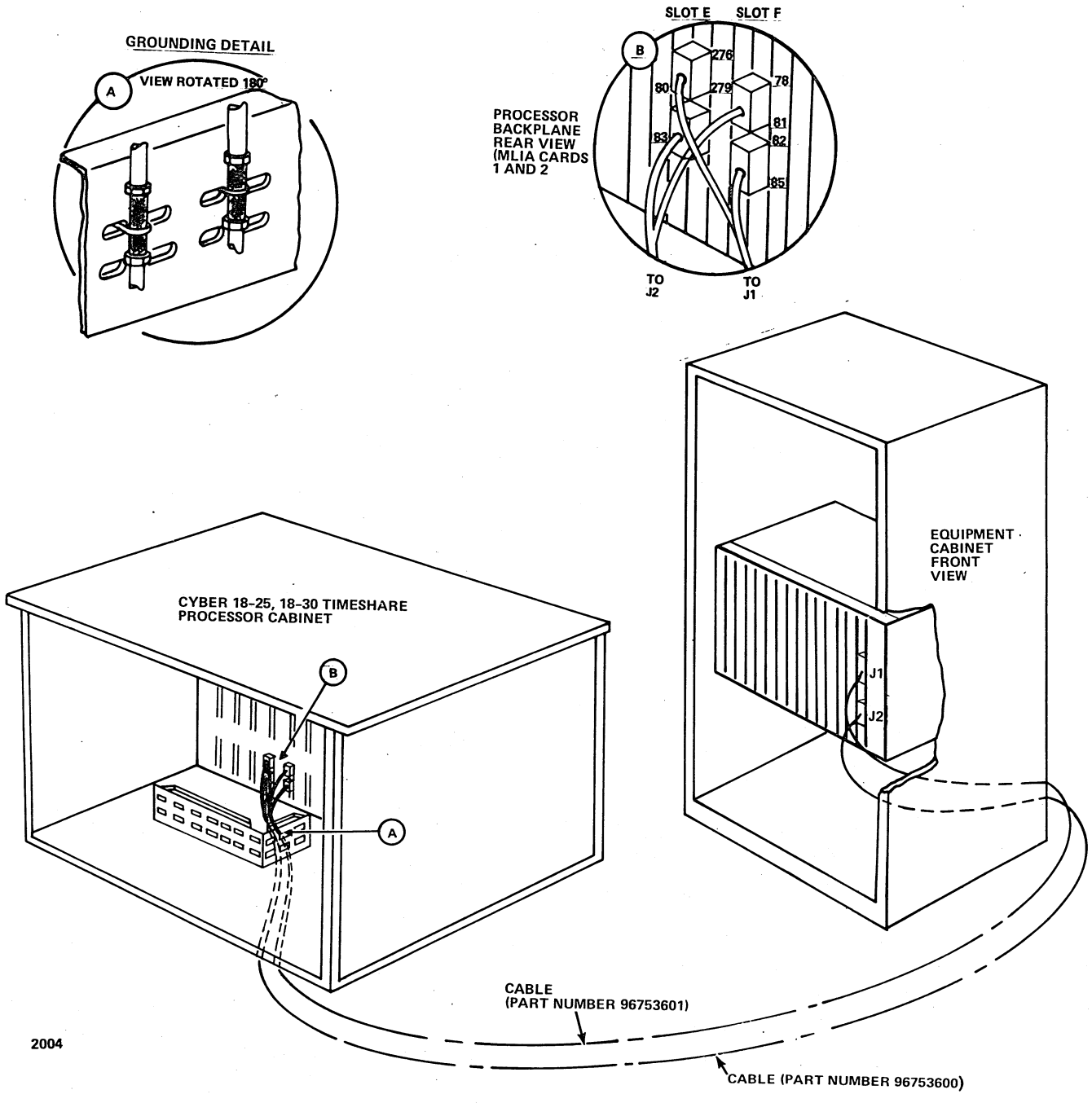

Figure 13-2. Single Loop Multiplexer Signal Cable Installation

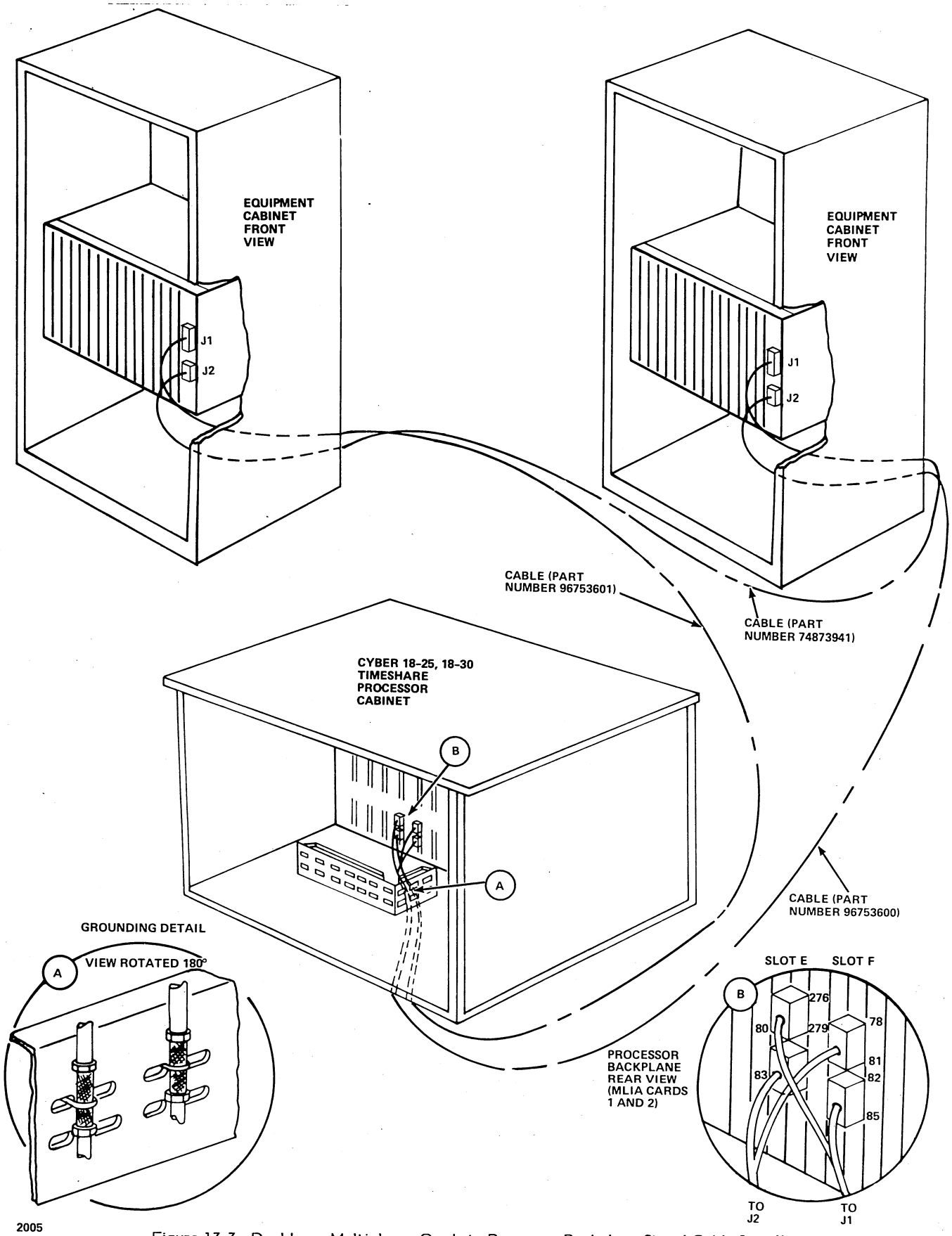

Figure 13-3. Dual Loop Multiplexer Cards to Processor Backplane Signal Cable Installation

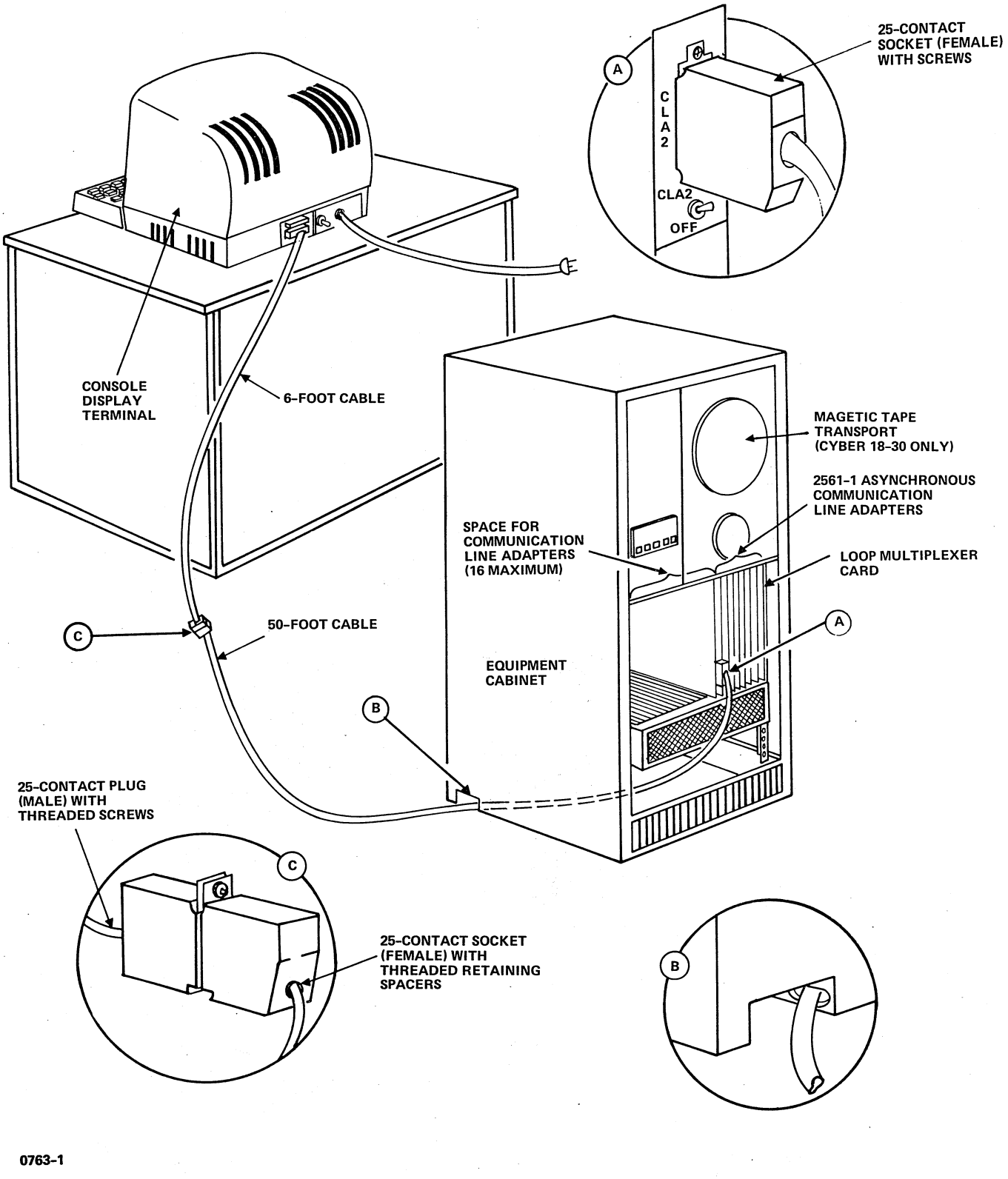

Figure 13-4. Asynchronous Communication Line Adapter to Console Display Terminal Signal Cable

The CC555 console display functions as an operators console or a remote terminal input/output device for the computer system. It performs input and terminal control functions via a detachable keyboard assembly, and monitors both input and output functions on a 12-inch cathode-ray tube display screen. Included within the console/terminal are all the necessary electronics, including an asynchronous communication-facility interface, to permit it to operate in much the same manner as a teletypewriter.

The console/terminal has two interface connectors at the rear panel. (Refer to figure 4-1.) One connector, labeled DATA SET CONNECTOR, is used to connect the console/terminal to either the I/O-TTY or eight-channel communication line adapter slots in the processor chassis. The second connector, labeled PERIPHERAL CONNECTOR, is not supported by the CYBER 18 system.

PARTS AND EQUIPMENT

Parts and Equipment	Equipment Number	Part Number
Console display	CC555-A/B	15630400/ 15630401
Cable assembly (I/O-TTY controller to console). Supplied with 18-10M, 18-20 processor, 10.5 feet (3.2 meters)		61406100
Cable assembly, 15 feet (4.6 meters). Supplied with CYBER 18-30 system.		96744876 or 88952422†
Cable assembly (eight-channel communication line adapter to terminal), 50 feet (15.2 meters)		96750282 or 88951570 or 88952427†

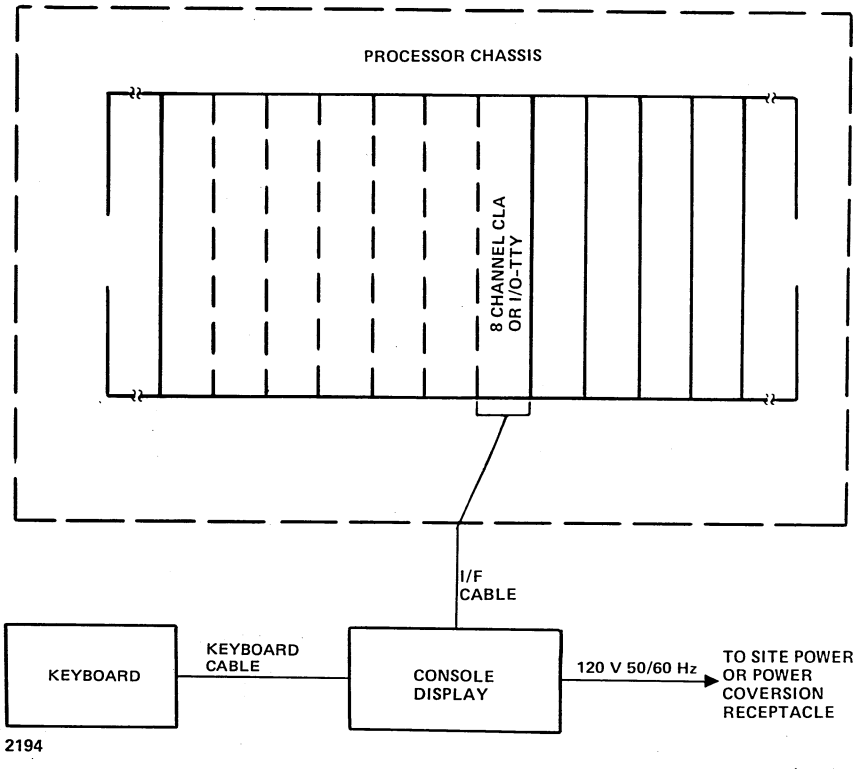

Figure 14-1. Console Display Installation Block Diagram

†FCC EMI qualified part. Use of non-qualified parts on FCC EMI verified systems will void the system verification. Refer to section 1, FCC EMI Verification, for details concerning identification and continuation of this verification.

The console/terminal rear panel data set connector is equivalent to ITT Cannon DD-25S connector and therefore requires the equivalent of ITT Cannon DB-25P as a mating connector. Figures and tables for pin assignments required on mating connectors are provided in the 92452 Conversational Display Terminal Hardware Maintenance Manual and in section 19 of this manual.

TOOLS AND EQUIPMENT

No special tools or test equipment are required to install the console/terminal.

UNCRATING

The console/terminal is shipped in a heavy-duty cardboard carton and is buffered by preshaped polystyrene packing material. The following procedure describes the steps for uncrating the display terminal. (Refer to figure 14-2).

1. Open the top of the exterior container and lift out the cables secured in the end-frame slits of the packing material.
2. Lift the top flaps of the end frames and remove the keyboard.
3. Remove the two T-blocks interlocked in the end frames.
4. Remove the console/terminal, with the end frames still attached, from the exterior container.
5. Remove the end frames and any remaining packing material from the console.

CRATING

To protect the console/terminal from damage during transit, always prepare it for shipment using only approved materials and procedures. Proper materials may be obtained by contacting the nearest CDC representative.

To crate the console/terminal, refer to figure 14-2. If desired, a template is available for use in cutting out the polystyrene material. (Order drawing number 41035301 from the CDC Corporate Traffic division.)

The crating and packing of any loose console/terminal component parts should be performed in a manner similar to that of the console/terminal to avoid possible damage during shipment.

INSPECTION

Inspect the console/terminal as follows:

1. Remove the console/terminal and cables from the shipping carton and check for damage.
2. Check the contents of the carton against the packing list.
3. Examine all connectors and plugs for possible bent pieces.
4. Remove the cabinet hood from the display module by unscrewing two mounting screws at the rear of the hood (figure 14-3) and sliding the hood to the rear, then up. Check for loose or broken switches, connections, and logic assemblies.
5. Check to see that the control logic printed circuit board is inserted in its designated slot. Refer to figure 14-4.
6. Make sure that interprinted wiring assembly connectors are properly seated.
7. Check for physical operation of all switches and controls.

POWER REQUIREMENTS

Refer to section 1 for input power requirements.

The CC555-A console display is designed to operate from a nominal input of 120 V ac, 50 or 60 Hz. The CC555-B is designed to operate from a nominal input of 220 V ac, 50 Hz. The unit is adjusted for 50 Hz or 60 Hz operation by a function switch on the control logic printed circuit board. This switch is set to the required position during switch/jumper verification. To verify the input voltage requirement of the console display, refer to the equipment label on the rear of the unit. If the site voltage is not within the voltage specified, refer to the 752 Conversational Display Terminal Hardware Maintenance Manual, section 5, for changes required at the input power transformer.

POWER CABLING

The console/terminal is provided with a three-prong grounded power cable. Assure that CB1 at the rear of the terminal is off (down) before connecting or disconnecting the power cable from the site power source. Refer to figures 14-5 and 14-6 for the manner and location of connecting the input power cord of the console/terminal.

SIGNAL CABLING

The console/terminal is intended for use as an operators console on a CYBER 18-10M, 18-20, 18-25, or 18-30 system when connected to the I/O-TTY controller or as a remote terminal when connected to the FJ442 Eight-Channel Communication Line Adapter. Signal cabling for each configuration is described below.

CONSOLE DISPLAY TO CYBER 18-10M AND 18-20

1. Attach the signal cable to the processor I/O-TTY controller backplane slot K as shown in figure 14-5.
2. Attach the signal cable shield under the U-bolt and to the cabinet.

MATERIALS REQUIRED	QTY	CDC PART NO.
END FRAME CUSHIONING	2	41035801
3" WHITE REINFORCED BOX SEALING TAPE	A/R	---------
EXTERIOR CONTAINER (SMALL DISPLAY)	1	41035803
OR,		
EXTERIOR CONTAINER (LIAT DISPLAY)		41035802

NOTES:
1) INTERLOCK FOAM BASE LEGS WITH END FRAMES
2) PLACE END FRAMES WITH BASE LEGS ON DISPLAY
3) PLACE DISPLAY WITH END FRAMES INTO CONTAINER
4) INTERLOCK "T" BLOCKS WITH END FRAMES
5) LIFT TOP FLAPS ON END FRAMES AND INSTALL KEYBOARD WITH KEYS FACING DOWN
6) SECURE CABLES IN END FRAME SLITS AS SHOWN
7) CLOSE AND SEAL CONTAINER WITH 3" WHITE REINFORCED BOX SEALING TAPE

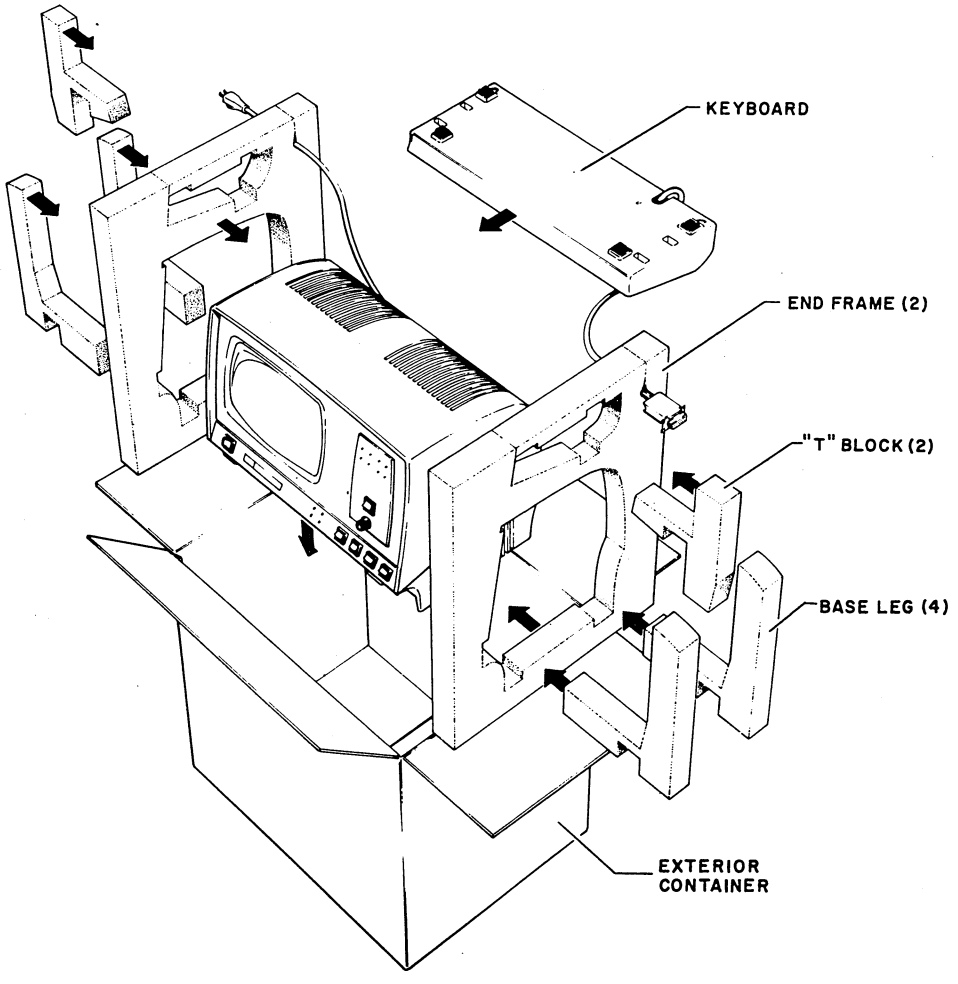

Figure 14-2. Crating and Uncrating the Console Display

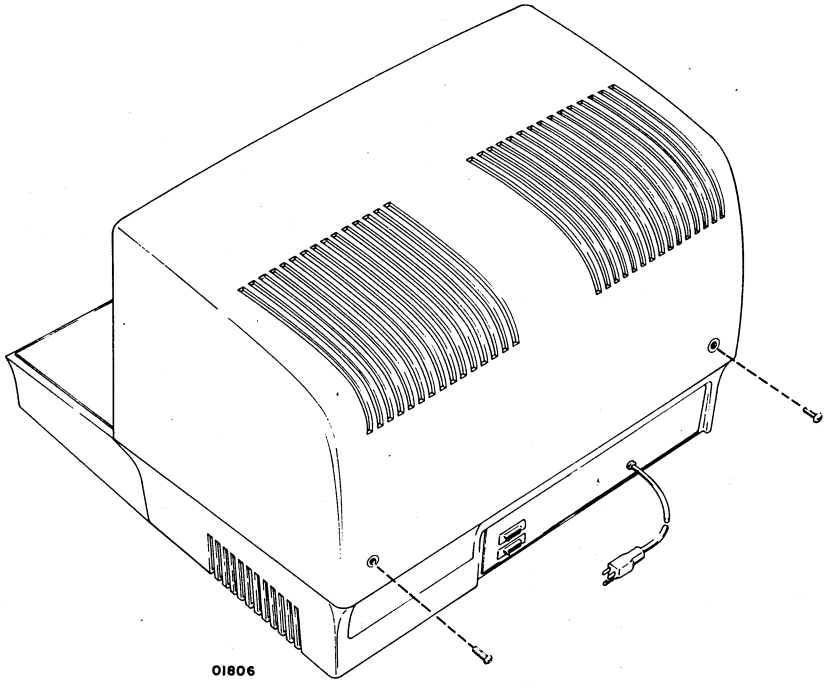

Figure 14-3. Cabinet Hood Removal

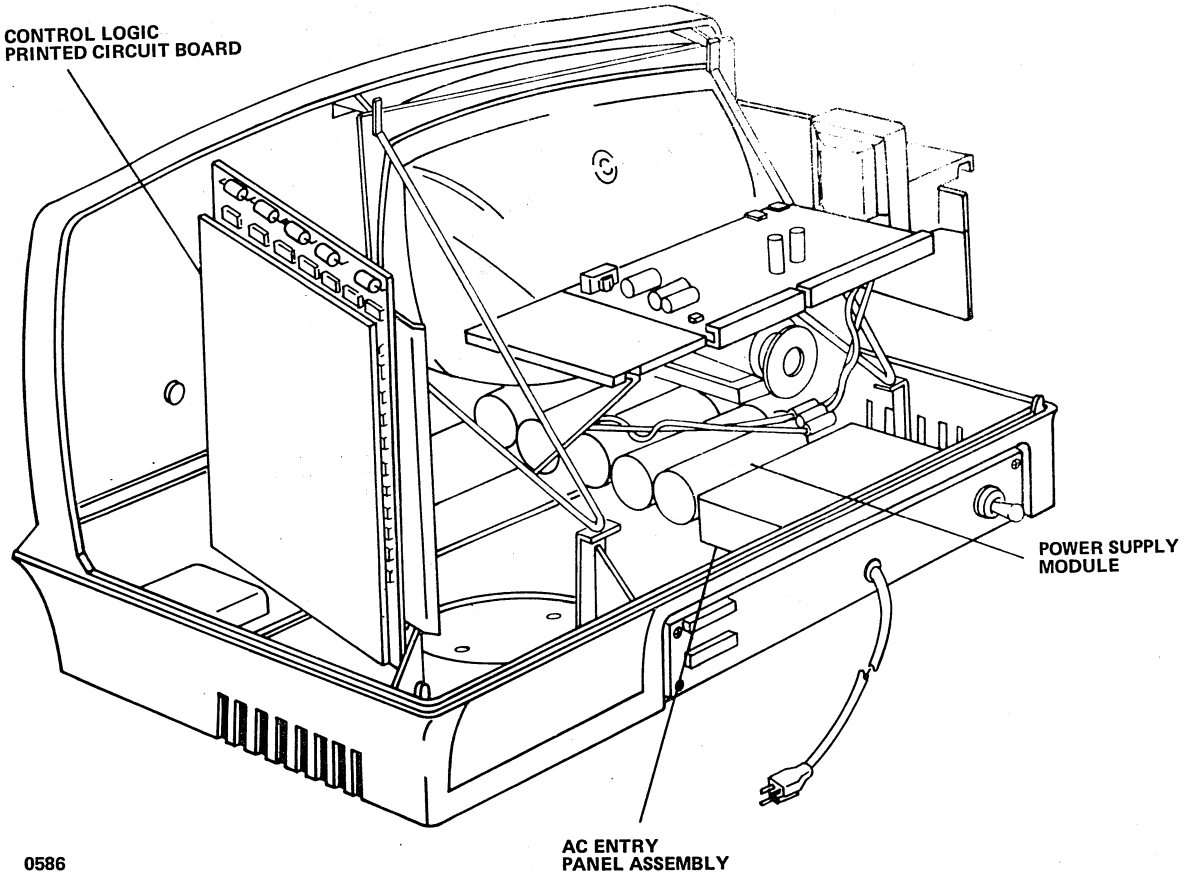

Figure 14-4. Console Display Component Arrangement

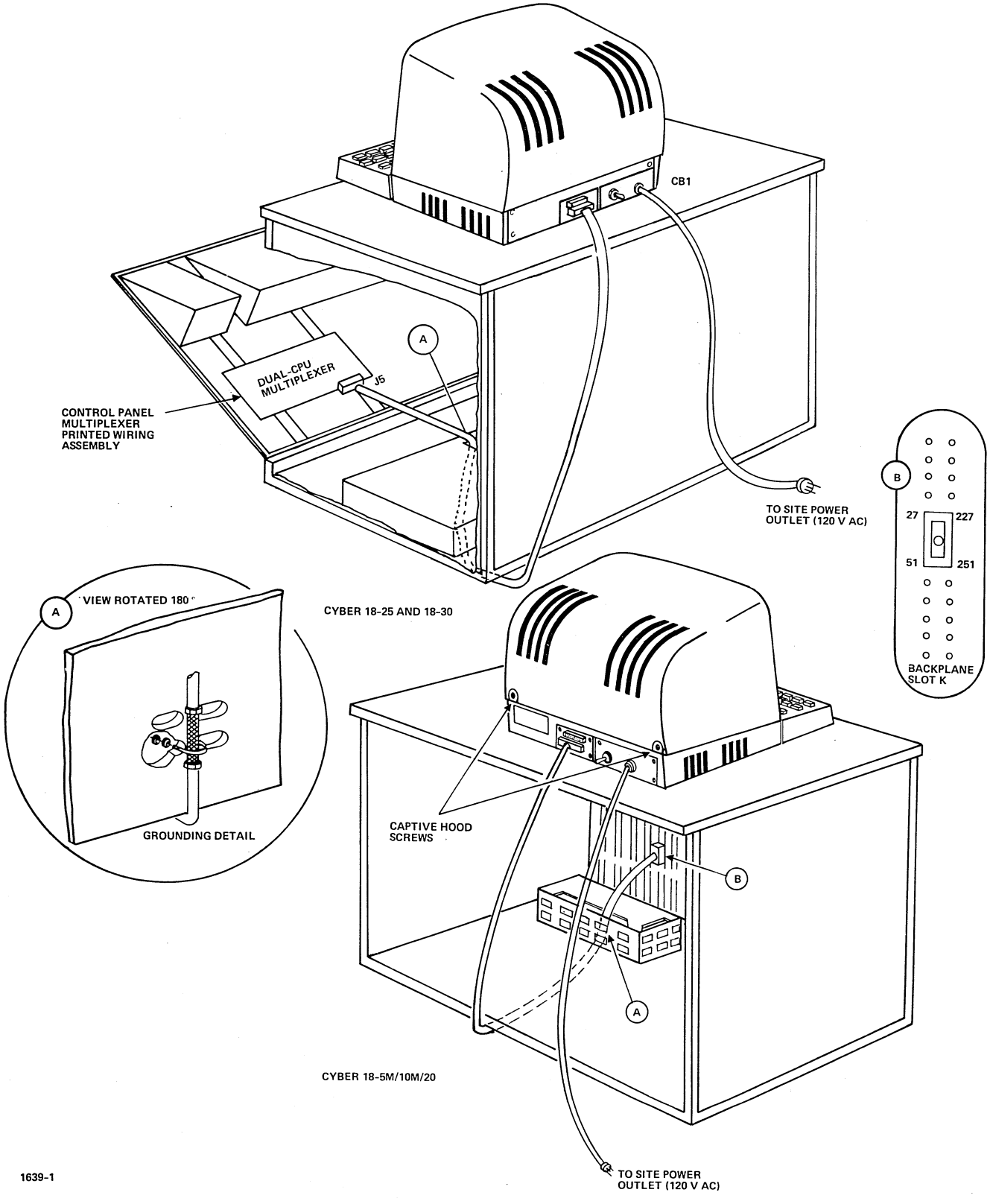

Figure 14-5. CYBER 18 Processor Operator's Console Signal Cable Installation

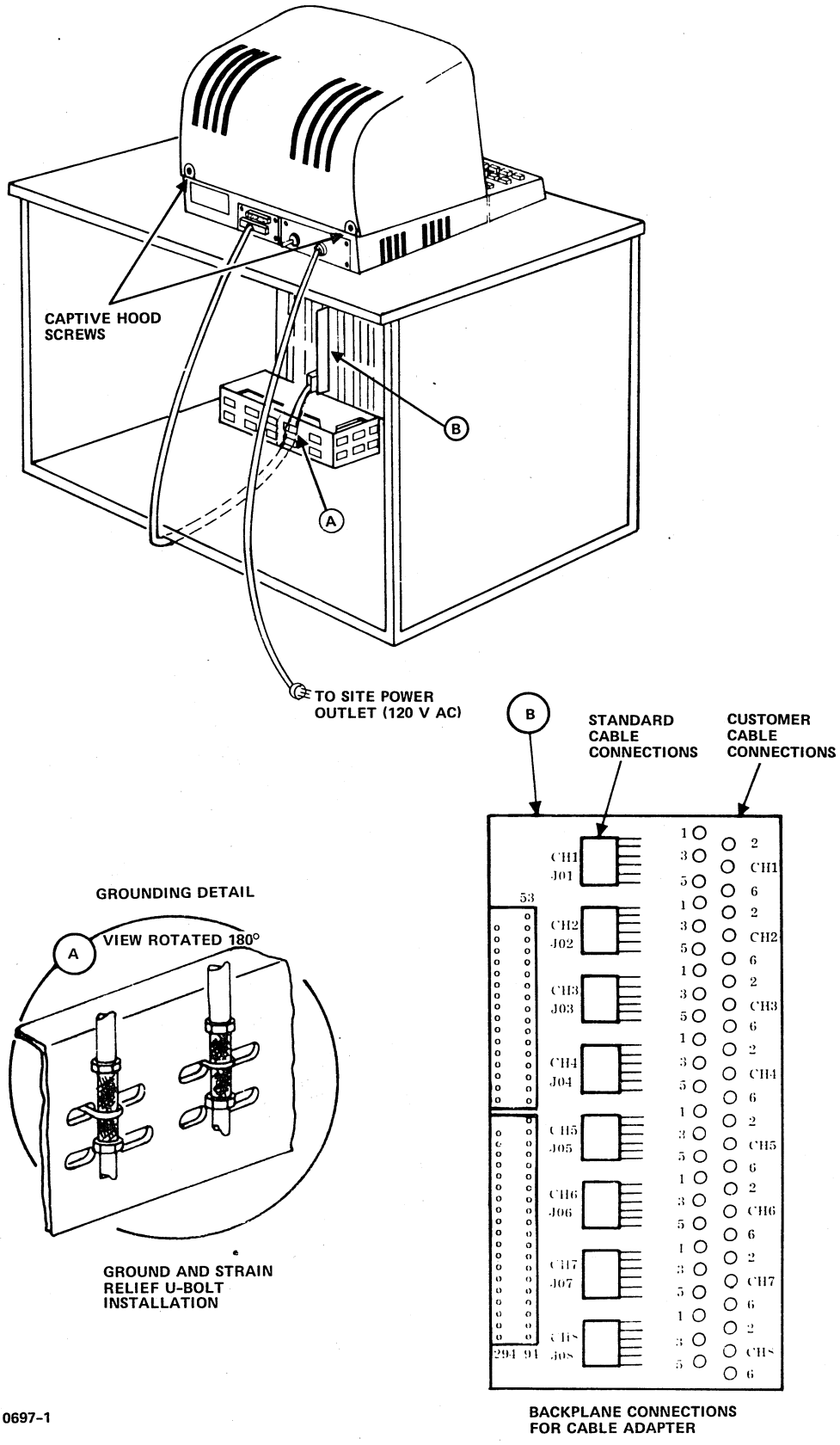

Figure 14-6. Terminal to Eight-Channel Communication Line Adapter Signal Cable Installation

3. Attach the console end of the cable to the data set connector at the rear of the console display.

CONSOLE DISPLAY TO CYBER 18-25 AND 18-30

1. Attach the signal cable to J-5 of the dual-CPU multiplexer as shown in figure 14-5.
2. Attach the signal cable shield under the U-bolt and to the cabinet.
3. Attach the console end of the cable to the data set connector at the rear of the console display.

TERMINAL TO EIGHT-CHANNEL COMMUNICATION LINE ADAPTER

The terminal requires a terminal-to-eight-channel communication line adapter signal cable, 50 feet (15.2 meters) in length. This cable must be special-ordered. Section 19 of this manual contains instructions for the local fabrication of a signal cable if one is desired by the customer. A cable interface board is supplied with the eight-channel communication line adapter to accommodate connection of either the standard or locally fabricated signal cable. Refer to section 19 for information relating to channel selection from the eight-channel communication line adapter to the terminal.

1. Attach the signal cable to the eight-channel communication line adapter cable interface board as shown in figure 14-6.
2. Attach the signal cable shield under the U-bolt and to the cabinet.
3. Attach the terminal end of the cable to the data set connector at the rear of the terminal.

KEYBOARD CONNECTION

To connect the keyboard to a display terminal, mate the keyboard cable plug with the display terminal receptacle. The receptacle is located in the right front corner of the display terminal recessed area. Position the keyboard under the terminal recessed area if desired by raising the front edge of the terminal and sliding the back edge of the keyboard under the terminal.

CAUTION

When mating the keyboard cable under the terminal, avoid stressing the signal cable attached at the rear of the terminal. If doubtful, remove the signal cable connector before attaching the keyboard.

SWITCH/JUMPER VERIFICATION

I/O-TTY CONTROLLER BAUD RATE SELECT SWITCHES

To verify the baud rate select switch positions on the I/O-TTY controller, the printed circuit board must be removed from the processor chassis. Proceed as follows:

1. Open the front door of the processor cabinet and remove the chassis cover plate. Attached to the cover plate is an extractor tool for removing the controller.
2. Remove the printed wiring assembly from slot K.
3. Verify that the baud rate switch positions agree with the applicable configuration specified in figure 14-7.
4. Replace the I/O-TTY controller board, extraction tool, and chassis cover plate.

EIGHT-CHANNEL COMMUNICATION LINE ADAPTER SELECT SWITCHES

Refer to section 19 for setting the required select switches if the terminal is to be connected to an eight-channel communication line adapter.

OPERATOR'S CONSOLE/DISPLAY TERMINAL EXTERNAL SWITCHES

Assure that the external switch settings of the console/terminal and keyboard are set to their desired positions for the applicable site configuration.

OPERATOR'S CONSOLE/DISPLAY TERMINAL INTERNAL SWITCHES

Internal switches, jumpers, and controls are used principally for console/terminal set-up and maintenance procedures. All internal controls are located on the control-logic printed circuit board inside the display module enclosure. Refer to figure 14-4 for location of the printed circuit board. Figure 14-8 shows the location of these controls on the printed circuit board and indicates how they are set to obtain a desired condition. A decal, similar in appearance to that shown in figure 14-8, is carried on the logic board chassis inside the display module. The FACTORY boxes on the decal carry Xs indicating the initial switch settings made at the factory; the SITE boxes should be marked with an X during installation to reflect the switch settings used for adjustments made to a specific console/terminal installation. Refer to the 92452 Conversational Display Terminal Hardware Maintenance Manual for a complete description of internal switch functions.

To verify switch settings, proceed as follows:

1. Remove the control logic printed circuit board cover plate by removing the two retaining screws holding the plate to the printed circuit board.
2. Verify the setting of the baud rate switches, internal control switches, and interface jumpers to the positions required for the particular installation. Refer to figure 14-8 and table 14-1 for the correct settings. Use a ballpoint pen point to alter switch settings if necessary. Use needle-nose pliers to alter interface jumpers if necessary.
3. Verify the security of the data set connector at the rear panel.

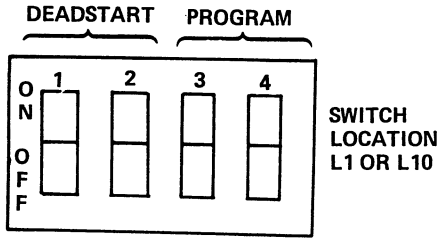

BAUD RATE SELECT SWITCH SETTINGS

RATE	DEADSTART		PROGRAM	
	SWITCH POSITION 1	SWITCH POSITION 2	SWITCH POSITION 3	SWITCH POSITION 4
110	ON	ON	ON	ON
300	ON	OFF	ON	OFF
1200	OFF	ON	OFF	ON
9600†	OFF	OFF	OFF	OFF

†NORMAL OPERATING POSITION

0394

Figure 14-7. I/O-TTY Controller Baud Rate Select

CAUTION

Ensure that CB1 on the rear panel on the console/terminal is off (down) and that the console/terminal ac power cord is removed from the power outlet before performing the following step.

NOTE

The checkout procedures outlined in the system hardware maintenance manual may be completed before performing steps 5 and 6 of this procedure to avoid repeated removal of the printed circuit board cover plate and cabinet hood.

5. Replace the control-logic printed circuit board cover plate by positioning the plate in place and installing the two retaining screws removed in step 1 of this procedure.

6. Replace the cabinet hood and hood-retaining screws removed during the inspection procedure of this section.

7. Plug the ac power cord into the appropriate site ac power outlet.

8. Turn the console/terminal power on by pushing CB1 up at the console/terminal rear panel.

NOTE

If CB1 trips to off after being turned on, wait approximately 30 seconds before attempting to reset it. If the breaker trips repeatedly, refer to the system hardware maintenance manual for diagnostic procedures.

OFFLINE AND DIAGNOSTIC TESTING

Perform the offline and diagnostic checks according to the off-line test program and diagnostic decision logic tables (DDLTs) in volume 2 of the subsystem hardware maintenance manual.

NOTE

The diagnostic tests and routines described in the subsystem hardware maintenance manual can only be performed after the console display, processor, and flexible disk drive or tape cassette (diagnostic load device) installations are complete.

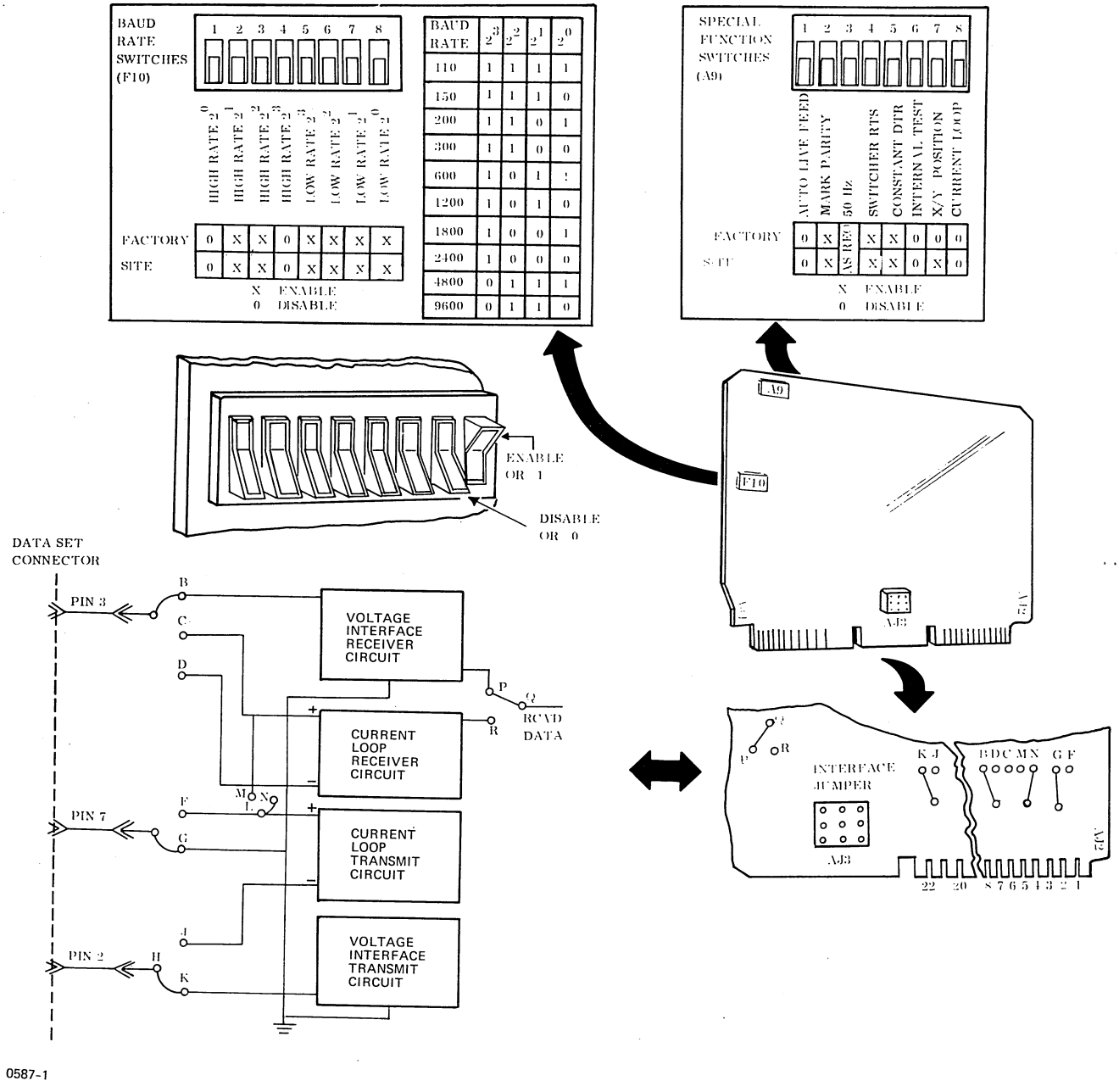

Figure 14-8. Internal Switches and Controls

TABLE 14-1. PRINTED WIRING ASSEMBLY SWITCH/JUMPER SETTING

Control	Factory Setting	CYBER 18 Setting
HIGH RATE switches	9600 baud	9600 baud
LOW RATE switches	110 baud	110 baud
AUTO LINE FEED switch	Disabled	Disabled
MARK PARITY switch	Enabled	Disabled
50 Hz switch	Enabled	As required by site power supply
SWITCHED RTS switch	Enabled	Enabled
CONSTANT DTR switch	Enabled	Enabled
INTERNAL TEST switch	Disabled	Disabled
X/Y POSITION switch	Disabled	Enabled
CURRENT LOOP switch	Disabled	Disabled
INTERFACE jumpers	Voltage level interface	Voltage level interface

The matrix printer is a table-top-mounted 70 line/minute printer housed in its own cabinet. The printer produces up to four copies plus an original with up to 132 columns at a nominal speed of 70 lines per minute. Printer capabilities include a 1000-character interface buffer and bidirectional printing. Features include an electronic vertical format unit (EVFU) that reads and stores format instructions from a punched tape, paper runaway to stop paper motion whenever forms slew for an excessive length, LED diagnostics displays for controller-detectable errors, and a rear-mounted forms paper basket.

The CT104-A uses a 7x7 dot matrix and prints 64 ASCII symbols.

The CT104-D uses a 9x7 dot matrix and prints 96 ASCII symbols.

The printer can be controlled by an eight-channel communication line adapter (CLA) that resides in the processor chassis (refer to section 1 for specific controller slot assignments) or it can operate as a peripheral of the CC614 or CC628 keyboard display terminal. An interface cable assembly connects the printer to either the CLA via the backplane pins of the processor or the appropriate connector of the display terminal.

PARTS AND EQUIPMENT

Parts and Equipment	Equipment Number	Part Number
70 line/minute matrix printer	CT104-A or CT104-D	95453000 or 95453003
Printer ribbon cassette		44671691
Format tape		95414500
Interface cable assembly, CLA to printer, 50 feet (15.2 meters)		96750284 or 96752351 or 88951580
or Interface cable assembly, terminal to printer, 20.5 feet (7.6 meters)		61406101

TOOLS AND EQUIPMENT

The following tools and equipment are required to install the printer:

- Tin snips or sheet metal shears (for opening equipment packaging)
- Screwdriver, common, 1/4-inch blade
- Pocket knife (to cut tape, cardboard, and so forth)
- Adjustable open-end wrench, 6 to 8 inches long
- Punch, format tape (CDC part number 76657900)
- Format tape splice (CDC part number 76628200), minumum of two each

UNCRATING

Read this entire section before attempting to unpackage and assemble the printer.

PRINTER

1. Cut and remove the steel strapping securing the printer package to the wood skid.
2. Open the printer box.
3. Reach into the printer box and lift out the printer.

CAUTION

The printer weighs 100 lbs (45.5 kg). Two persons are required to lift the printer out of the box.

4. Carefully place the printer on a solid bench or table.
5. Cut the straps that secure the two end cushions to the printer. Remove the two end cushions and the plastic dust cover.

CAUTION

Do not tilt the printer up on edge so that its weight is resting on the cabinet.

6. Remove the two hex head shipping screws that lock the floating structure to the printer base plate during shipping. These two screws are located on the bottom of the printer base plate. One screw is on the left side halfway between the left front and left rear rubber feet. The other screw is on the right side in a similar position. These screws should be saved for re-use if the printer is ever repackaged for shipping. Slide one side of the printer at a time over the edge of the table until the screw is accessible for removal.

PAPER BASKET

1. Open the paper basket box.
2. Remove the two-piece basket.
3. Retain the paper basket for installation to the printer following assembly of the printer.

CRATING

PRINTER

Read this entire section before attempting disassembly and packaging of the printer.

1. Unplug and coil the line cord. Tape or tie the cord so it does not uncoil. Place the cord on top of the printer.
2. Remove the paper basket.
3. Install the two hex head (M6X8) metric shipping screws that lock the floating printer structure to the printer base plate. The screws are installed from under the printer. One screw goes on the left side halfway between the left front and left rear rubber feet. The other screw goes on the right side in a similar position.
4. Tape all printer covers in place with glass filament tape.
5. Assemble the outer container, using filament tape to secure the flaps. Place the container on the shipping skid.
6. Place the printer in a plastic dust cover.
7. Place an end cushion over either end of the printer. Secure the end cushions in place with glass filament tape, wrapping several turns of tape from end to end around the printer.
8. Place the printer in the container and seal the flaps with carton sealing tape.

> CAUTION
> The printer weighs 100 lbs (45.5 kg). Two persons are required to lift the printer and place it in the container.

9. Strap the container to the skid using steel strapping clamps and steel edge protectors.

The printer is now ready for shipment.

PAPER BASKET

1. Assemble the exterior box using carton sealing tape.
2. Place the paper basket in the box.
3. Place the separator pad on top of the basket.
4. Place the paper basket mounting rack into the box on top of the separator.
5. Close and seal the flaps of the box with carton sealing tape.

PRINTER ACCESS

The interior printer area can be accessed by removing the front cover, side cover, upper cabinet cover, and lower cabinet skirt. The upper cabinet cover and lower cabinet skirt should only be removed by trained service personnel. Refer to figure 15-1 for access location and removal.

FRONT COVER

Removal of the front cover permits access for installing the ribbon cassette and for forms loading. To remove the front cover, grasp the two lifting tabs on either side of the cover and lift the cover up and off the upper cabinet. When installing the front cover, the beveled edge must be toward the reat of the machine and facing downward. To install the cover, reverse the removal procedure. Care should be taken that the four corner guides are engaged properly into the upper cabinet before seating the front cover.

SIDE COVER

Removal of the side cover permits access to the format tape reader, format tape, 6/8 line-per-inch switch, compressed pitch switch, and the load vertical format switch. To remove the side cover, place the fingertips into the depression in the left side of the upper cabinet and under the bottom edge of the side cover, and slide the side cover upward and off the upper cabinet.

To install the side cover, reverse the removal procedure.

UPPER CABINET COVER

Removal of the upper cabinet cover permits access to the format reader and paper drive servo motor.

To remove the upper cabinet cover, remove the two knobs located on the right side of the cover by pulling them off their shafts and lift the upper cabinet cover off the lower cabinet skirt.

To install the upper cabinet cover, reverse the removal procedure

LOWER CABINET SKIRT

The lower cabinet skirt must be removed to access the controller and print head control board and the power transformer. It may not be removed without first removing the upper cabinet cover.

The lower cabinet skirt is fastened to clinch nuts in the base plate by four slotted-head screws. Removal of these four screws permits the skirt to be lifted up and off the base plate. Installation is accomplished by reversing the removal procedures.

INSPECTION

Inspect the printer in the following manner:

1. Inspect for physical damage from shipping, such as impact damage, surface dents and scratches.
2. Inspect the cabling and the power cord for damage to connections, cable connectors, and the cable cover.

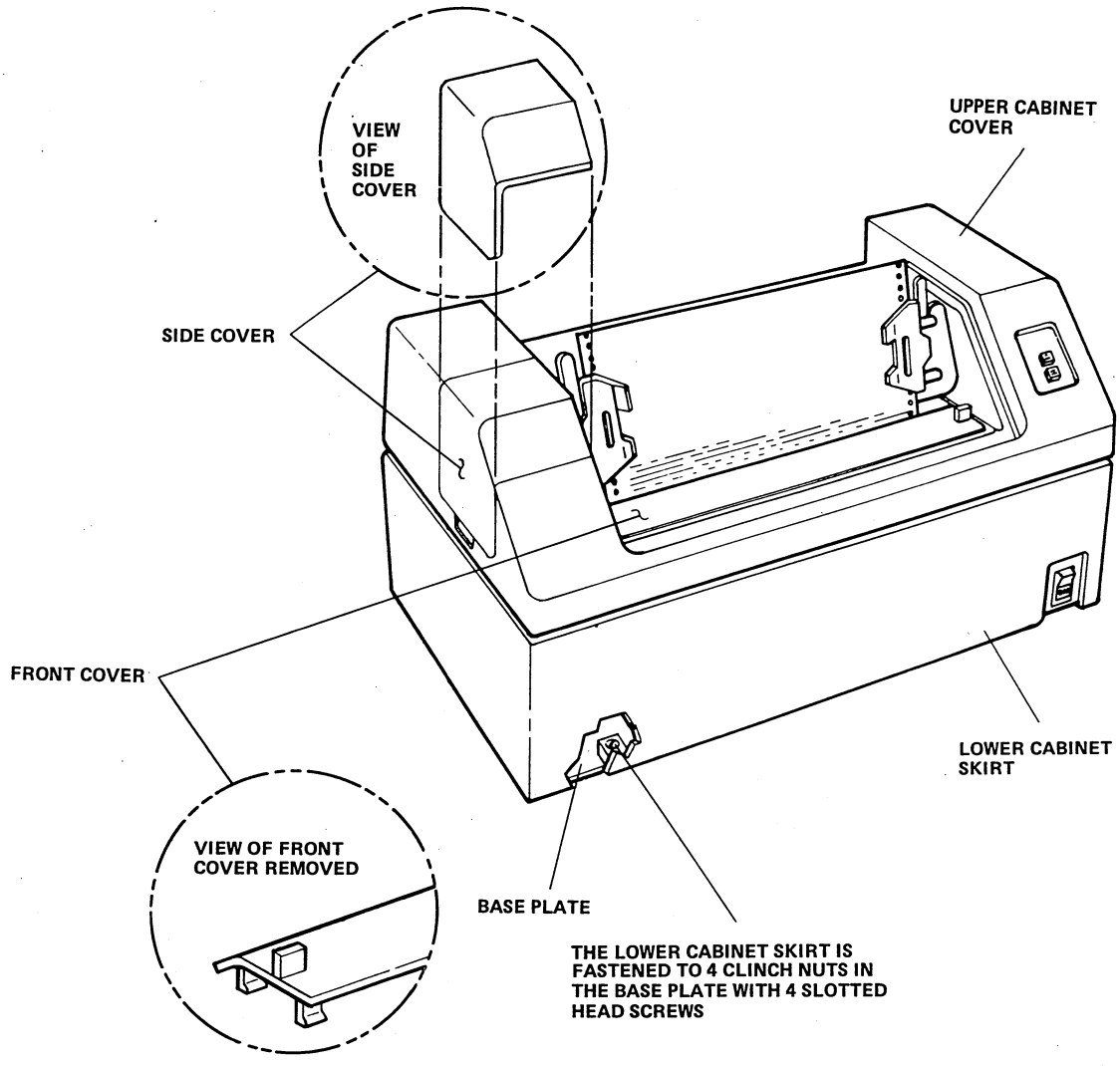

Figure 15-1. Printer Access (CL104-A/D)

3. With the access covers removed, inspect the printed circuit boards and interconnecting cables to ensure that connectors are connected and properly seated. Refer to figure 15-2 to assist with component location.

CAUTION

Integrated circuits and MOS chips are present on the printed circuit boards in this printer. These devices are easily distorted if a static electrical charge is accidentally applioed to a pin through improper handling or repair. These static charges can be minimized or eliminated if proper precautions are observed.

a. When handling integrated circuits or plug-in boards, do not touch the circuit pins or plug-in board connector pins. Handle by the edge only.

b. When removing or inserting a connector or board, ground yourself to the unit frame before touching the board or connector.

c. Do not remove or insert a connector or board with the unit power on.

d. Do not remove a plug-in board or chip from its shipping carton until ready to insert it.

e. Use only a three-wire soldering iron when repairing printed circuit boards. Lay the board on an insulated piece of material. Do not lay the board on metal or plastic.

4. At the rear of the printer, unlatch and swing down the controller printed circuit boards and inspect the power supply and fuses for security.

5. Using one hand, move the print head back and forth on the print head support shafts several times to ensure that it moves freely.

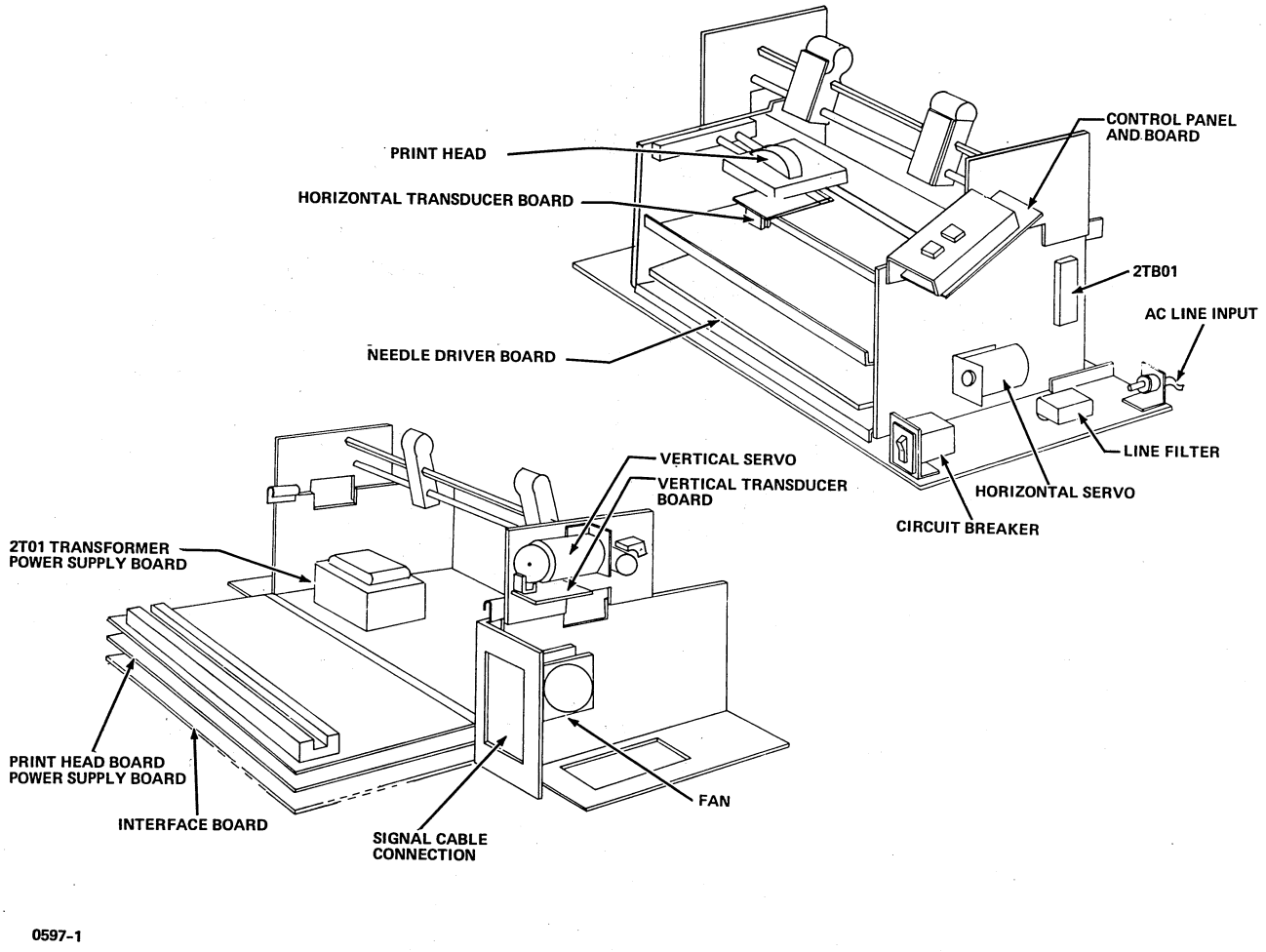

Figure 15-2. Printer Parts Locations

6. Unlock the left and right tractors (refer to figure 15-3) and slide them both from right to left. The tractors should both slide easily.

7. Lock both tractors in place. The tractors should not be able to slide.

INSTALLATION LEVELING

Level the top surface for the desk upon which the printer is to be installed. If the desk does not have built-in levelers, use shims under the legs or corners.

In general, the printer operates on a fairly unlevel surface so long as it is not allowed to rock. The main reason for requiring that the printer be level is for forms-feed purposes. If the top surface of the forms stack is not fairly level with the printer, the tension on the forms is uneven as they enter the printer. Uneven tension on the forms can cause form tearing or paper jams.

POWER REQUIREMENTS

With a voltmeter, check the site line voltage at the power outlet provided for the printer.

Due to the difference in nominal voltage inputs between sites, the printer is equipped with a multi-tap input transformer. Voltage ranges can be tap-selected by changing field-accessible input power connections to terminal block 2TB01 of the printer. The tap selectable ranges available are listed in table 15-1.

Using table 15-1 and the wiring diagrams shown in figure 15-4, check the wiring configuration of the printer's universal transformer and from the circuit breaker to terminal block 2TB01. If the printer is not wired correctly, change the wiring of terminal block 2TB01 to obtain the configuration required for the site power supply. When making these wire changes, make sure that the brown wire from the circuit breaker is changed along with the transformer leads.

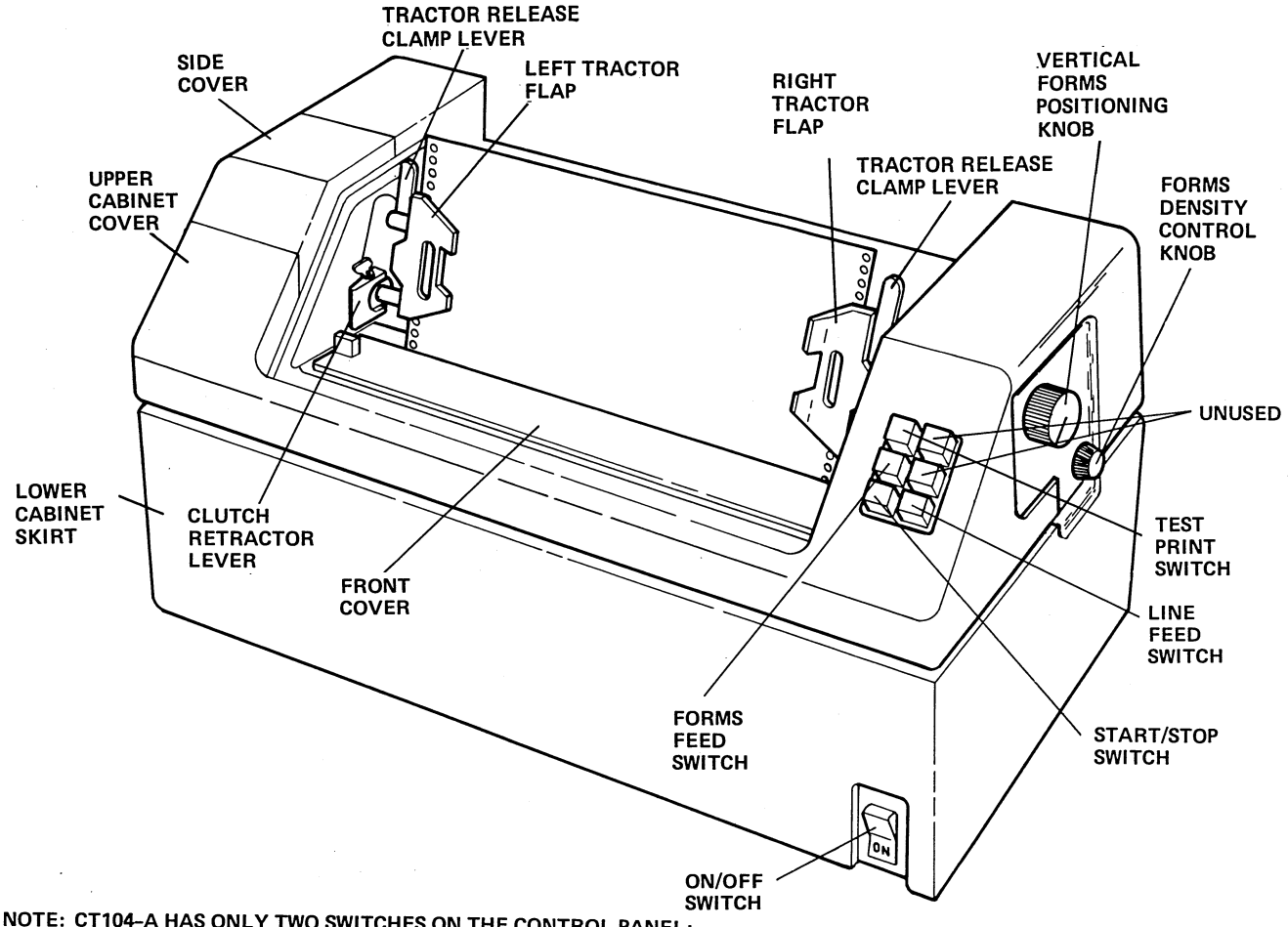

Figure 15-3. Printer Controls and Indicators (CT104-D)

The printer may be operated from a 50 or 60 Hz power source within the following frequency ranges:

Nominal Frequency	Tolerance Range
50 Hz	49.0 to 50.5 Hz
60 Hz	59.0 to 60.6 Hz

No component changes or adjustments are required when changing from 50 Hz to 60 Hz operation.

POWER CABLING

The printer is provided with a three-wire (hot, neutral, and earth ground) power cord of which 8 feet (2.44 meters) is external to the printer. The power cord is terminated with a nonlocking three-prong plug for use with 60 Hz outlets. The cord must be fitted at the site with a plug to meet local requirements for use with 50 Hz outlets. Before changing power cord configurations, ensure that the printer is wired for the required voltage.

SIGNAL CABLING

EIGHT-CHANNEL COMMUNICATION LINE ADAPTER

The matrix printer interfaces with the eight-channel communication line adapter (CLA) within the processor cabinet. Install the signal cable according to the procedures given in section 19 for the eight-channel CLA signal cable installation.

KEYBOARD DISPLAY TERMINAL SLAVE PERIPHERAL

Connect the I/O cable from the rear of the display terminal (PERIPHERAL CONNECTOR of CC614 terminal or PRINTER CONNECTOR of CC628 terminal) to the printer rear panel connector. Refer to table 15-2 for printer/terminal connector pin assignments.

TABLE 15-1. UNIVERSAL TRANSFORMER CONFIGURATION

Nominal Site Power (V ac)	Voltage Range (V ac)	2TB01 Input (Brown)	2TB01 Output (Violet)	2TB01 Output (Orange)
100	90 - 107	5	2	4
120	104 - 127	4	2	4
200	180 - 213	6	5	7
220	198 - 235	7	5	7
230	207 - 246	7	4	7
240	215 - 257	8	5	7
260	235 - 278	8	4	7

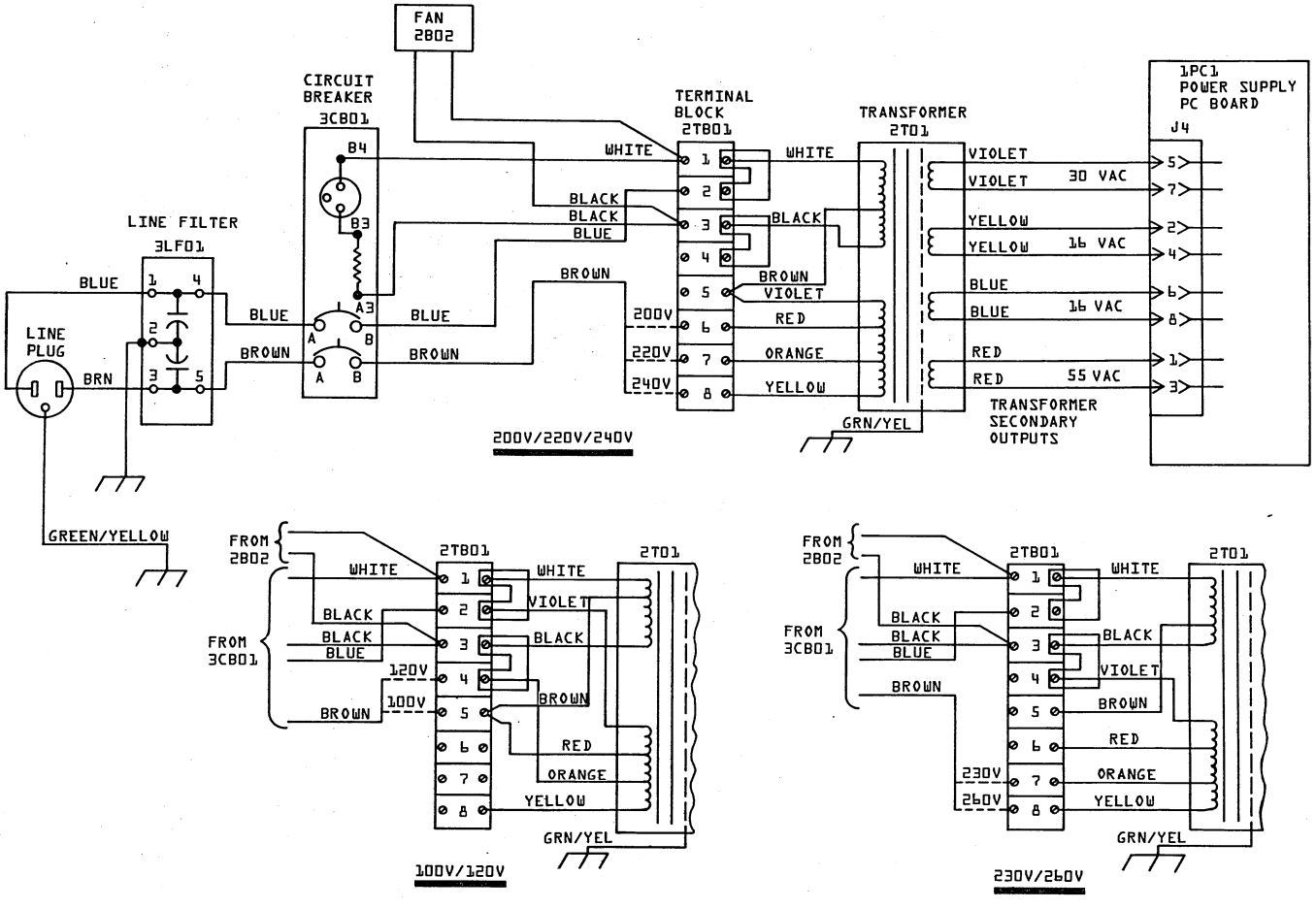

Figure 15-4. Alternate Power Configuration for Wiring the Universal Transformer

TABLE 15-2. PRINTER/TERMINAL CONNECTOR PIN ASSIGNMENTS

Pin Number	CCITT	EIA	Signal Name	Origin
1	101	AA	Protective Ground	Printer/Terminal
2	---	--	Not used	---
3	104	BB	Received Data	Terminal
4	---	--	Not Used	---
5	---	--	Not Used	---
6	107	CC	Data Set Ready (DSR)	Terminal
7	102	AB	Signal Ground	Printer/Terminal
8	109	CF	Received Line Signal Detector (CO)	Terminal
9	---	--	Not Used	---
25	---	--	Not Used	---

SWITCH/JUMPER VERIFICATION

EIGHT-CHANNEL COMMUNICATION LINE ADAPTER

Verify that the settings of the equipment select, interrupt, protect, and parity jumpers and the baud rate select switches on the eight-channel CLA are as specified in section 19 of this manual.

KEYBOARD DISPLAY TERMINAL SLAVE PERIPHERAL

Switch/jumper settings for the impact printer when operating as a peripheral to a terminal are set on the RS-232-C interface board. Identify, remove and make switch/jumper settings on the interface board as follows:

1. Open the rear access panel of the printer by turning the four twist lock fasteners located along the top and side of the backpanel 1/4 turn counterclockwise.

2. Identify the RS-232-C interface board (refer to figure 15-2) and remove it from the chassis by releasing the thumb-lever friction clamps at each side of the board and pulling it out of the chassis.

3. Refer to figure 15-7 to set the printer baud rate and parity select switches to match those of the keyboard display terminal (refer to section 6 for CC614 settings and section 31 for CC628 settings). Baud rate for terminals using an impact printer should not be set to exceed 1200 baud.

4. Set data bit switches (and jumper) to correspond with the parity selection in the preceding step: if odd or even parity is selected, select 7 data bits; if no parity is selected, select 8 data bits.

5. Remove jumpers for auto answering and reverse channel; alarm jumpers and buffer overflow jumper are optional (user's option).

6. Replace the RS-232-C interface board in the printer logic chassis by sliding it into place and seating it in the chassis receptacle by engaging the card extractors.

7. Close the rear panel of the printer cabinet and secure it by turning the twist-lock fasteners 1/4 turn clockwise.

VERTICAL TRANSDUCER BOARD

The electronic vertical format unit (EVFU), 6/8 line-per-inch, compressed pitch selection switches are located on the vertical transducer board at the left side of the printer. Refer to figure 15-5 for their location on the board assembly. Set the switches to enable the desired features.

CONTROLLER BOARD SWITCH-SELECTABLE FEATURES

Additional printer features are enabled by a set of switches located on the controller and print head board. Locate the board and set the switches as outlines in figure 15-6.

PRINTER OPERATOR SWITCHES

The operator switches on the top right front panel are momentary type switches and their positions are irrelevant at this time. Verify that the printer power switch on the lower right front panel is off.

RS232C INTERFACE SWITCH/JUMPER SETTINGS

Communication line parameters are enabled by a set of switches and jumpers located on the RS232-C interface board in slot 1A04 in the matrix printer. Locate the board (figure 15-2) and set the switches and jumpers as outlined in figure 15-7.

RIBBON CASSETTE INSTALLATION

The ribbon used in this printer consists of a disposable ribbon cassette that snaps over the print head and engages a cassette drive shaft on the print head support assembly. The cassette contains an endless nylon ribbon that is cycled through the cassette in one direction until the ribbon wears out. To install the ribbon cassette, refer to figure 15-8 and proceed as follows:

1. Remove the front cover to gain access to the ribbon cassette. Skip step 2 if no cassette is installed.
2. Place fingertips under the cassette locking tab and pull it upward until a slight click is heard, indicating that the cassette has disengaged from the support and pulley assembly. Remove the cassette by lifting it up and off the print head.
3. Remove the new ribbon cassette from its wrappings and ensure that its locking tab is in the up (disengaged) positon.
4. Place the ribbon cassette over the print head so that the drive spline on the bottom of the cassette engages the cassette drive shaft on the head support. The ribbon advance knob on the top of the cassette may be turned counterclockwise very slightly to aid in drive shaft and spline engagement.
5. While applying slight pressure to the top of the cassette with one hand, press the cassette locking tab downward until a slight click is heard. Using the thumb and forefinger of one hand, grasp the cassette by both sides and lift upward using a moderate pressure. If the cassette lifts off the print head, repeat the installation procedure.
6. Replace the front cover and ensure that it is seated properly.

NOTE

A safety interlock switch disables printer mechanical motion when the front cover is removed or not seated properly.

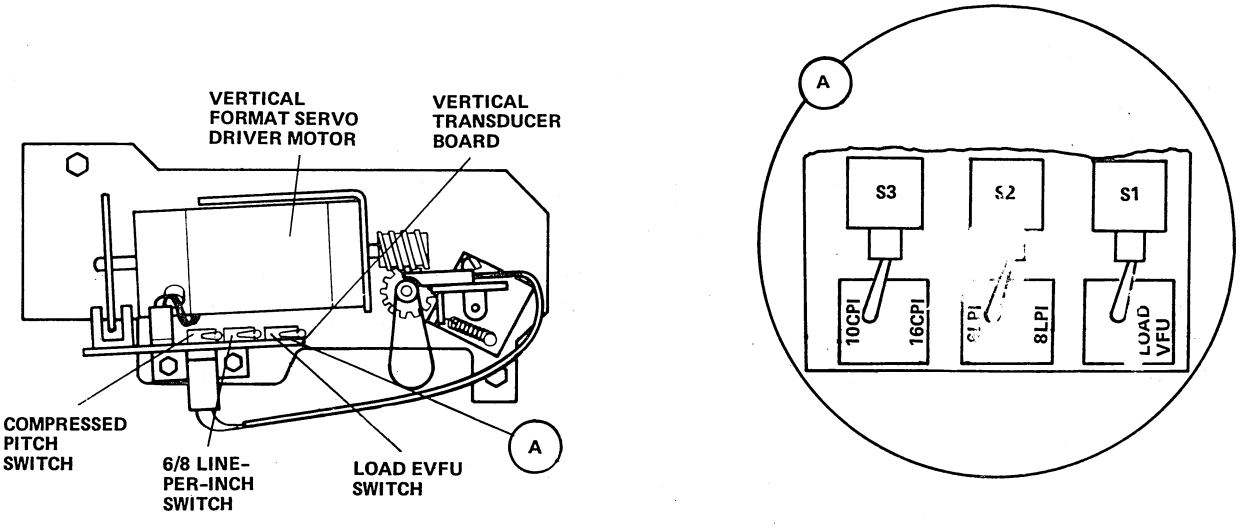

Figure 15-5. Vertical Transducer Board Switches

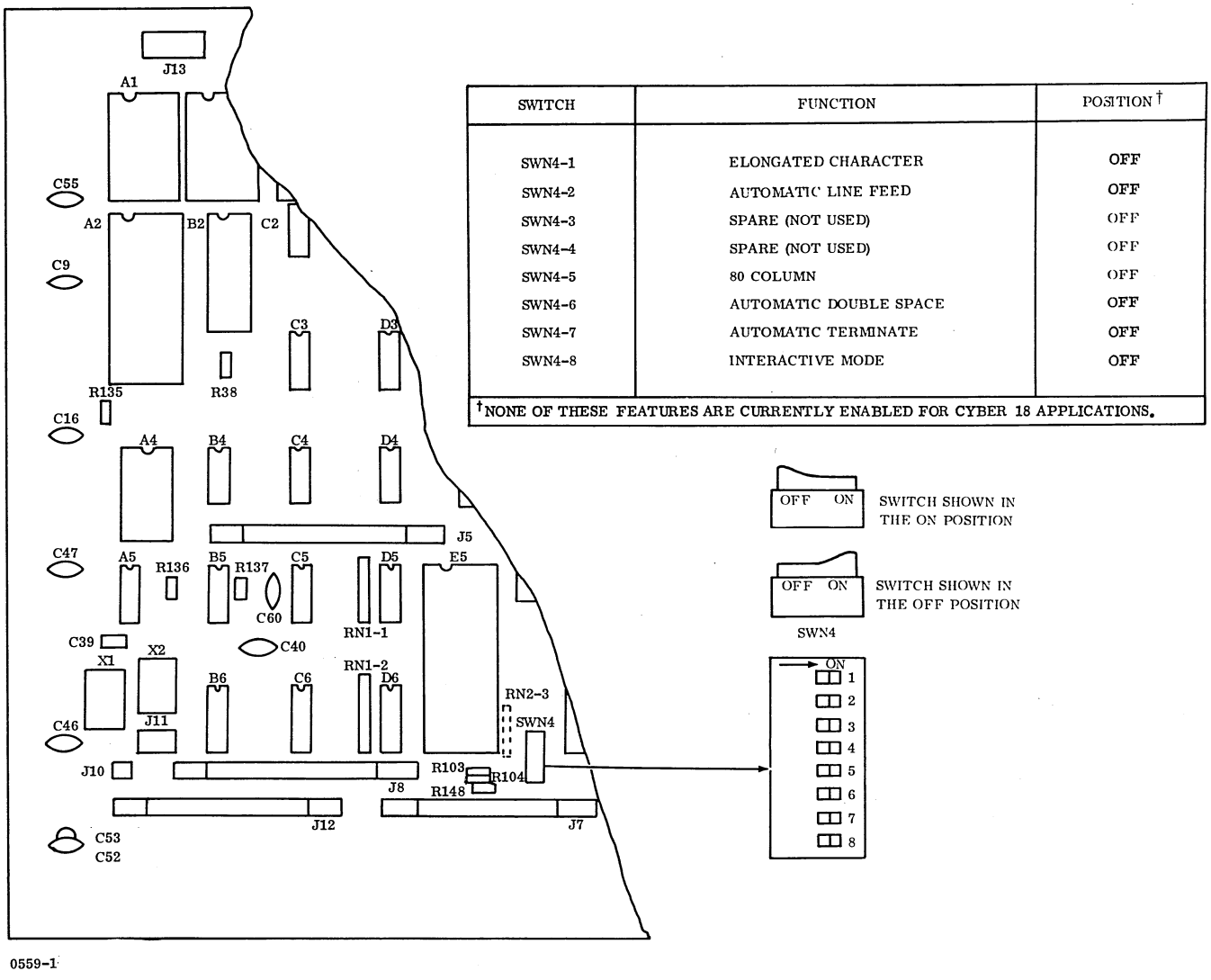

SWITCH	FUNCTION	POSITION †
SWN4-1	ELONGATED CHARACTER	OFF
SWN4-2	AUTOMATIC LINE FEED	OFF
SWN4-3	SPARE (NOT USED)	OFF
SWN4-4	SPARE (NOT USED)	OFF
SWN4-5	80 COLUMN	OFF
SWN4-6	AUTOMATIC DOUBLE SPACE	OFF
SWN4-7	AUTOMATIC TERMINATE	OFF
SWN4-8	INTERACTIVE MODE	OFF

†NONE OF THESE FEATURES ARE CURRENTLY ENABLED FOR CYBER 18 APPLICATIONS.

0559-1

Figure 15-6. Controller and Print Head Board Switch-Selectable Features

FORMAT TAPE PREPARATION

The format tape is a standard 1-inch (25-millimeter) wide tape with sprocket holes on 0.10-inch (2.5-millimeter) centers. The standard format tape (part number 95414500) comes with channel 3 already punched. Channel 1 must be locally punched to correspond to the top-of-forms position for the size of forms to be utilized. Channel 2 may be locally punched to establish any vertical tap position desired. The format tape may be of any length from 5.5 to 12.5 inches (140 to 315 millimeters), that is required to feed and position the selected forms. Any local punching of the format tape should involve only channels 1 and 2 of the tape.

When punching the format tape, use tape punch part number 76657900 (figure 15-9). Figure 15-10 illustrates a standard format tape configuration. The following procedures are intended to aid in punching the format tape.

1. Raise the splicer arm out of the way. Raise the tension arms and slide the channel selector to the rear and out of the way.
2. Place the format tape on the sprocket pins (channel 1 inside) so that the desired top of forms (FF) is in line with the punch groove. Lower the two tension arms.
3. Move the punch channel selector to position 1 and depress the punch.
4. If vertical tab (VT) is desired at this location, move the punch channel selector to position 2 and depress the punch again.

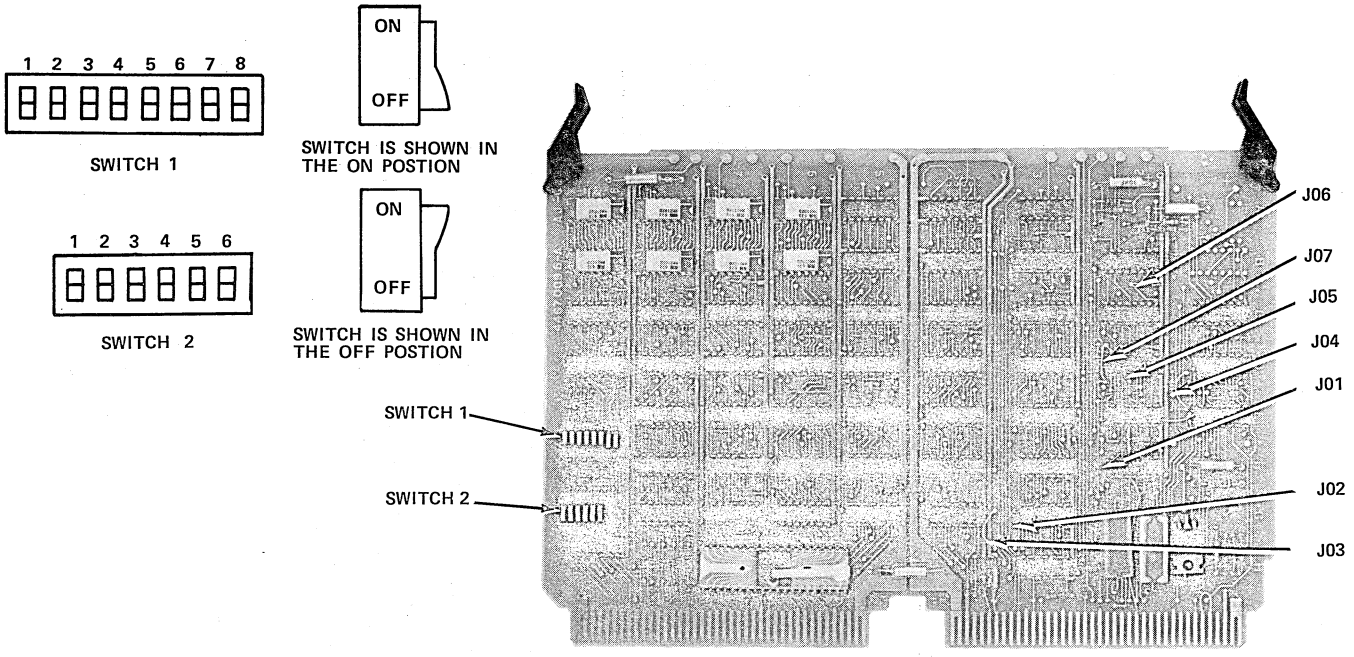

OPTIONS	SWITCH 2			
	1	2	3	4
EVEN PARITY†	ON	OFF	--	--
ODD PARITY	ON	ON	--	--
NO PARITY	OFF	--	--	--
5 DATA BITS	--	--	ON	ON
6 DATA BITS	--	--	ON	OFF
7 DATA BITS†	--	--	OFF	ON
8 DATA BITS	--	--	OFF	OFF
BUFFER OVERFLOW	--	--	--	--
AUTO ANSWERING	--	--	--	--
REVERSE CHANNEL MARK	--	--	--	--
REVERSE CHANNEL SPACE	--	--	--	--
AUDIBLE ALARM (OOP)	--	--	--	--
AUDIBLE ALARM (BEL CODE)	--	--	--	--

†NORMAL SWITCH CONFIGURATION

-- SWITCH POSITION DOES NOT MATTER FOR THIS OPTION

ON CLOSED
OFF OPEN

Figure 15-7. RS232-C Interface Switch/Jumper Locations (Sheet 1 of 2)

OPTIONS	JUMPER	NORMAL CONFIGURATION
5 DATA BITS	J07	
6 DATA BITS	J07	
7 DATA BITS	J07	IN
8 DATA BITS		
BUFFER OVERFLOW	J04	IN
AUTO ANSWERING	J05	OUT
REVERSE CHANNEL MARK	J03	OUT
REVERSE CHANNEL SPACE	J02	IN
AUDIBLE ALARM (OOP)	J01	OUT
AUDIBLE ALARM (BEL CODE)	J06	OUT

BAUD RATES	SWITCH 1								SWITCH 2	
	1	2	3	4	5	6	7	8	5	6
150 (416 μ SEC PRT)	ON	ON	OFF	OFF	ON	ON	ON	ON	ON	OFF
300 (208 μ SEC PRT)	OFF	ON	ON	OFF	ON	ON	ON	OFF	ON	OFF
600 (104 μ SEC PRT)	OFF	OFF	ON	ON	ON	ON	OFF	OFF	ON	OFF
1200 (52 μ SEC PRT)	OFF	OFF	OFF	ON	ON	OFF	OFF	ON	ON	OFF
1800 (39 μ SEC PRT)	OFF	ON	OFF	OFF	ON	OFF	ON	OFF	OFF	ON
2400 (26 μ SEC PRT)	OFF	OFF	OFF	OFF	OFF	OFF	ON	ON	ON	OFF
4800 (13 μ SEC PRT)	OFF	OFF	OFF	ON	ON	OFF	OFF	ON	OFF	ON
9600 (6.5 μ SEC PRT) †	OFF	OFF	OFF	OFF	OFF	OFF	ON	ON	OFF	ON

†NORMAL SWITCH CONFIGURATION

-- SWITCH POSITION DOES NOT MATTER FOR THIS OPTION

ON CLOSED
OFF OPEN

Figure 15-7. RS232-C Interface Switch/Jumper Locations (Sheet 2 of 2)

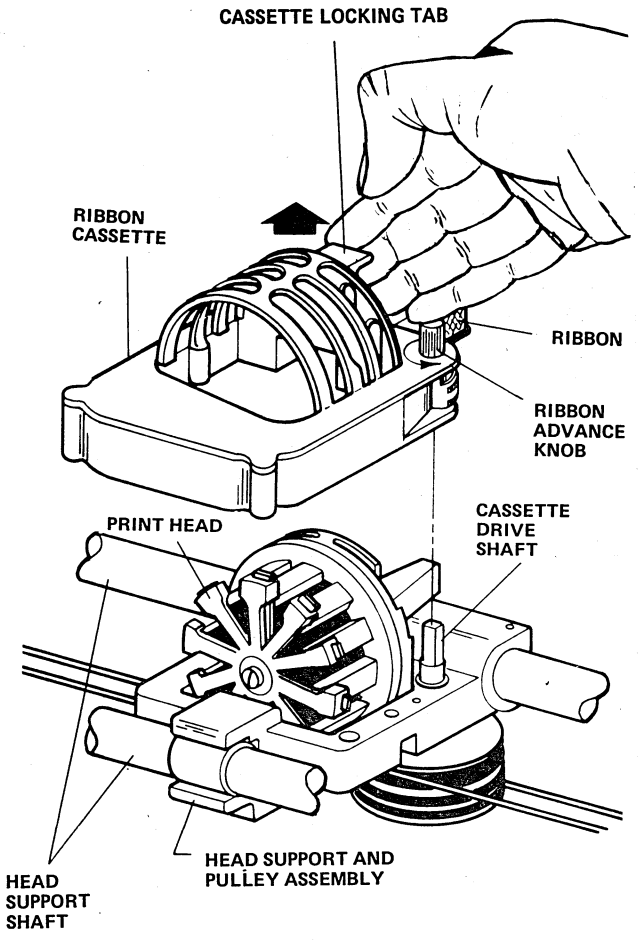

Figure 15-8. Ribbon Cassette Installation

5. Count the number of holes in channel 3 (lines on the form) until the next desired top of forms (FF) or vertical tab (VT) location is reached.

6. Lift the tension arms, position the next line to be punched in line with the punch groove, place the tape over the sprocket pins, and lower the tension arms.

7. Punch the tape again as outlined in steps 3 and/or 4 above. The pattern for each form may be repeated as many times as desired for up to 12.5 inches (317 millimeters) of format tape.

8. When the required length of tape for the selected form is reached, align the end line with the groove under the tape splicer, lower the splicer arm, and draw the cutting blade across the format tape.

9. Raise the splicer arm and place the two ends of the format tape over the splicer sprocket pins so that they abut at the groove beneath the splicer.

10. Remove the adhesive backing from a format tape splice (part number 76628200), and position the splice on the sprocket pins so that is equally covers both ends of the format tape. Lower the splicer arm and depress the splicer handle.

11. Now reverse the format tape and apply another splice on the opposite side so that the splice is displaced at least one or two sprocket holes from the splice on the opposite side. This offset minimizes abrupt changes in tape thickness. Lower the splicer arm and depress the splicer handle.

The tape is now ready to be installed. It may be desirable to load the forms into the printer before installing the format tape and loading the EVFU, since the EVFU requires reloading any time that power to the printer is turned off.

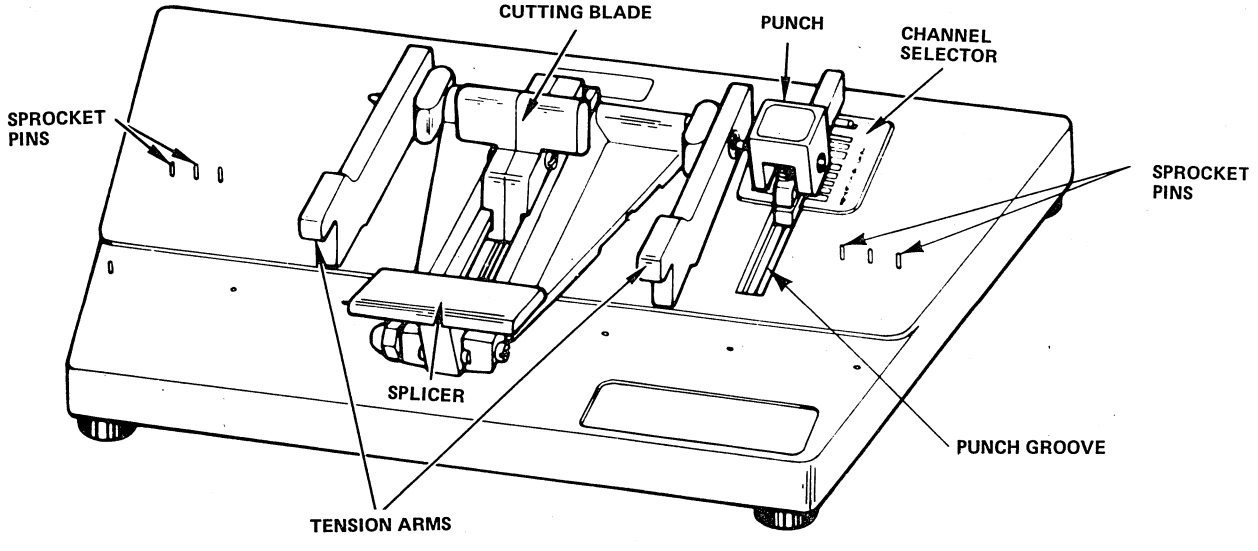

Figure 5-9. Format Tape Punch

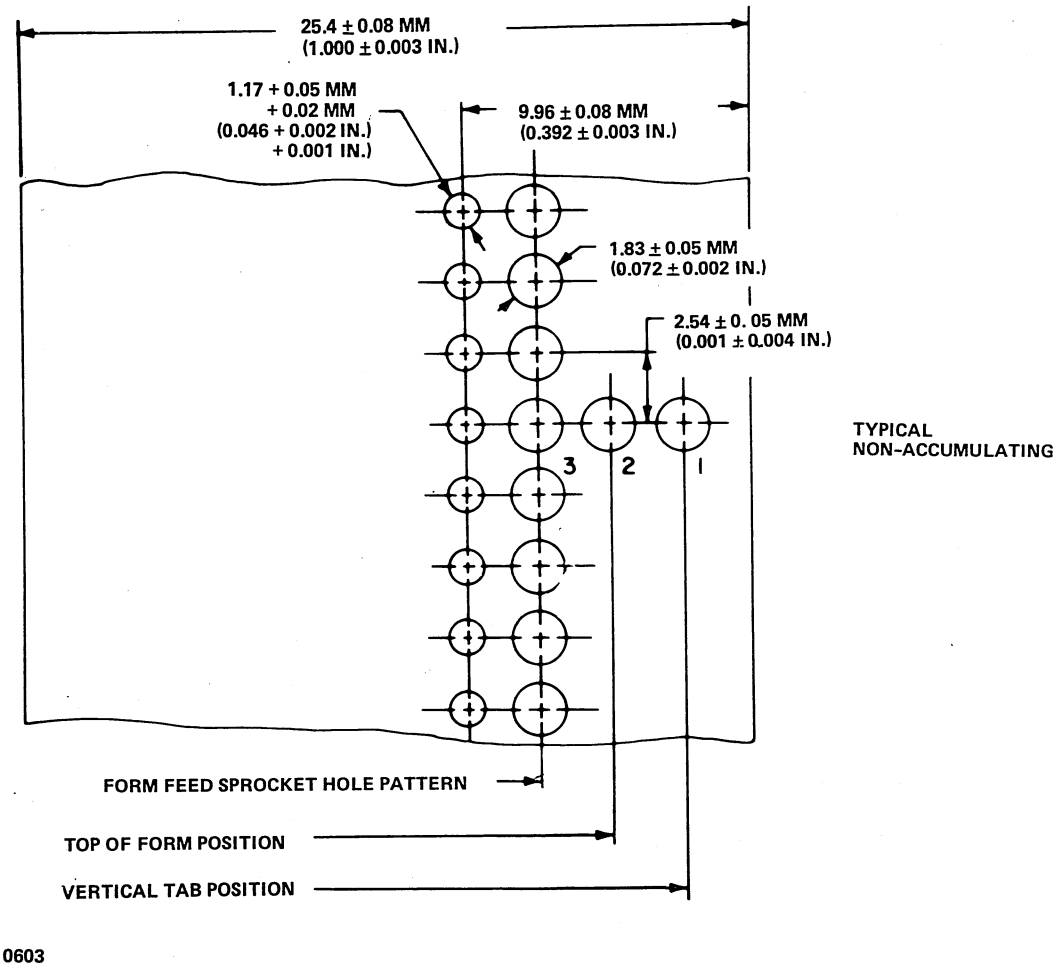

Figure 15-10. Format Tape Configuration

FORMAT TAPE INSTALLATION

Before proceeding with the format tape installation,, secure any printed circuit boards previously removed for inspection or switch/jumper verification. Install the upper cabinet cover and front cover. Leave the side cover off to facilitate format tape installation. Refer to figure 15-11 to assist with the format tape installation.

1. Connect the printer power cord to the site power outlet and turn the printer power on.

2. Lift the brush block away from the format tape drive sprocket by pulling the brush block retraction lever forward.

3. Mount the format tape over the teeth of the format tape drive sprocket. Lower the brush block to hold the tape in place by pushing the brush block retraction lever toward the rear of the printer. Channel 1 on the format tape should be on the inside.

4. Check to see that the 6/8 line-per-inch switch on the vertical transducer board is set to the position for the lines-per-inch spacing desired.

5. Load the format tape into the format tape memory by activating the LOAD FVFU switch on the vertical transducer board. This is a momentary switch that returns to its original position once activated.

   Activation of the switch causes the tape to pass through the reader until two successive form feeds (channel 1) are sensed. Then the tape is automatically reread to check the loaded data. The tape stops when a successful load and check has occurred. The tape should then be removed and the brush block assembly raised so that the brushes are not contacting the sprocket wheel to prevent possible sprocket damage. The maximum tape length that may be loaded is 176 lines.

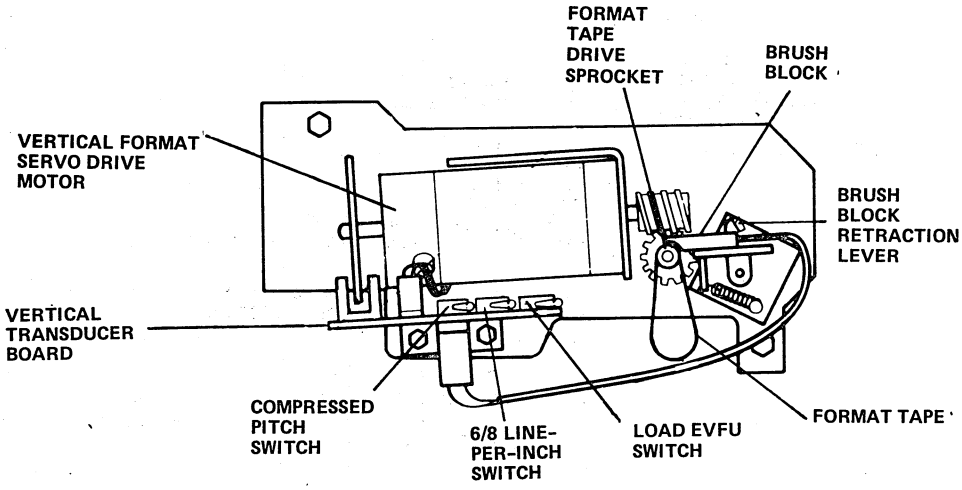

Figure 15-11. Format Tape Load Operation

NOTE

The tape must be reloaded whenever the 6/8 line-per-inch mode is changed or the printer power is turned off.

A minimum of two full pages of forms, if loaded, is moved through the tractors during format tape loading. This paper loss can be prevented by depressing the tractor clutch retractor lever during the loading operation.

FORMS INSTALLATION AND ALIGNMENT

Refer to figure 15-12 to aid with the loading and alignment of the selected forms.

1. Replace the printer in the stop mode by pressing the start/stop switch. Remove the front access cover.
2. Place the stack of fanfold forms behind the printer, directly below the forms input slot.
3. Insert the top form into the rear forms input slot and under the paper tension weights. The four paper tension weights may be raised and locked in an up position during form loading. Continue feeding the forms between the upper and lower paper slides until the form is visible at the platen in the front of the printer. When loading multiple-part forms, it may be necessary to increase the gap between the print head face and the platen by turning the density control knob all the way clockwise so the form may pass with ease.
4. Grasp the form and pull it upward until the top of the form is in line with the top of the tractor flap.
5. Open the left tractor flap and position the forms on the tractor feed pins. Close the flap.
6. Replace the front access cover and use its column guide for forms position reference.
7. Release the left tractor clamp lever and position the left tractor for the desired margin on the form. Reclamp the tractor in place with the tractor clamp lever.
8. Open the right tractor flap and release its tractor clamp lever. Position the right tractor so that the tractor feed pins can be seen through the form feed holes.
9. Position the form on the tractor feed pins and close the left tractor flap.
10. Slide the right tractor to the right very gently until the form is taut. Reclamp the right tractor in place with the tractor clamp lever.
11. Using the vertical forms positioning knob, position the top edge of the first form at the top edge of the tractor flaps. If the top edge of the form does not line up with the top of both tractor flaps, the form is misaligned on the feed pins and the loading procedure should be repeated.
12. Depress the start/stop switch and actuate the form feed switch. The format reader memory is now at the top of forms position.
13. Depress the clutch retractor lever and use the forms positioning knob to align the first line of print position on the forms to the print position on the line finder, illustrated in figure 15-13. Release the clutch retractor lever.
14. Reset the density control knob if it was moved during form loading. Lower the necessary paper tension weights.

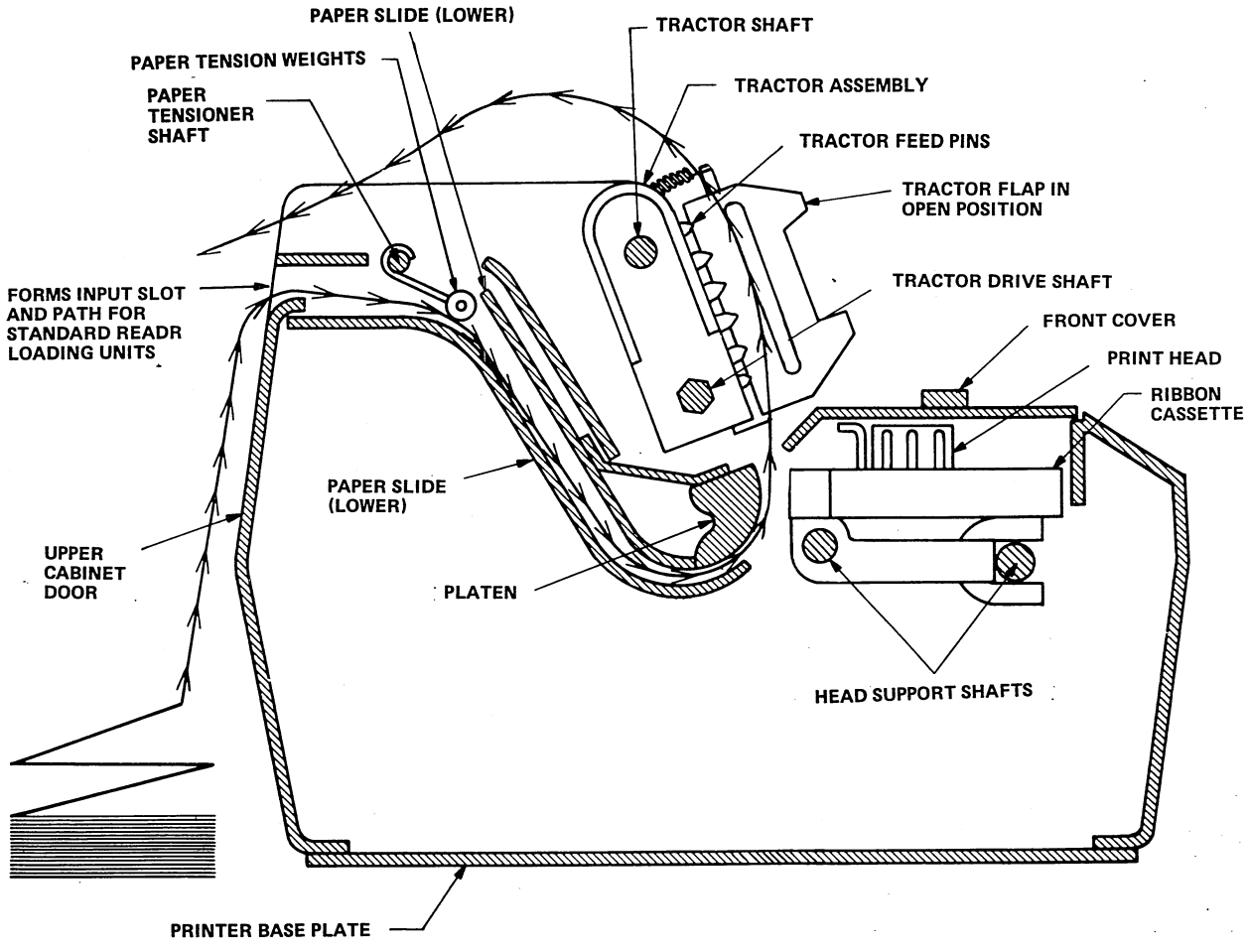

0601

Figure 15-12. Forms Patch for Rear Loading

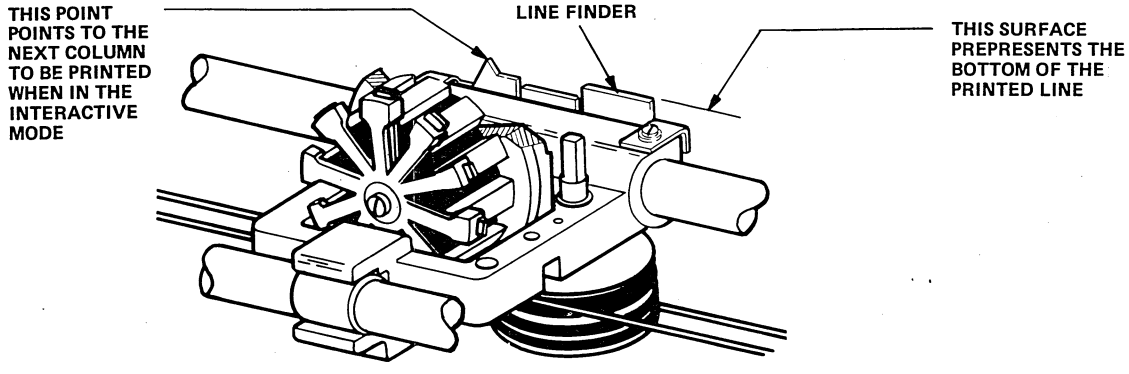

Figure 15-13. Line Finder and Column Printer

The forms should now be ready for printing. For single-part forms, use only the two center weights. Swing the outer two weights up and away from the forms. For multiple-part forms, all four weights are normally used. For narrow forms, any weight not covering the form with at least half of its width should be lifted. If forms tear at the sprocket holes, weights should be lifted until the tearing is eliminated. If tearing continues, the density control knob may need adjusting.

PAPER BASKET INSTALLATION

The paper basket illustrated in figure 15-14 consists of two pieces: a basket mounting rack and a basket. The basket mounting rack is mounted to the rear of the printer by hooking it over the paper tensioner shaft. The basket mounts to the rack. Attach the mounting rack to the printer and position the basket in the basket mounting supports.

Both pieces of the paper basket must be removed before removing the upper cabinet cover.

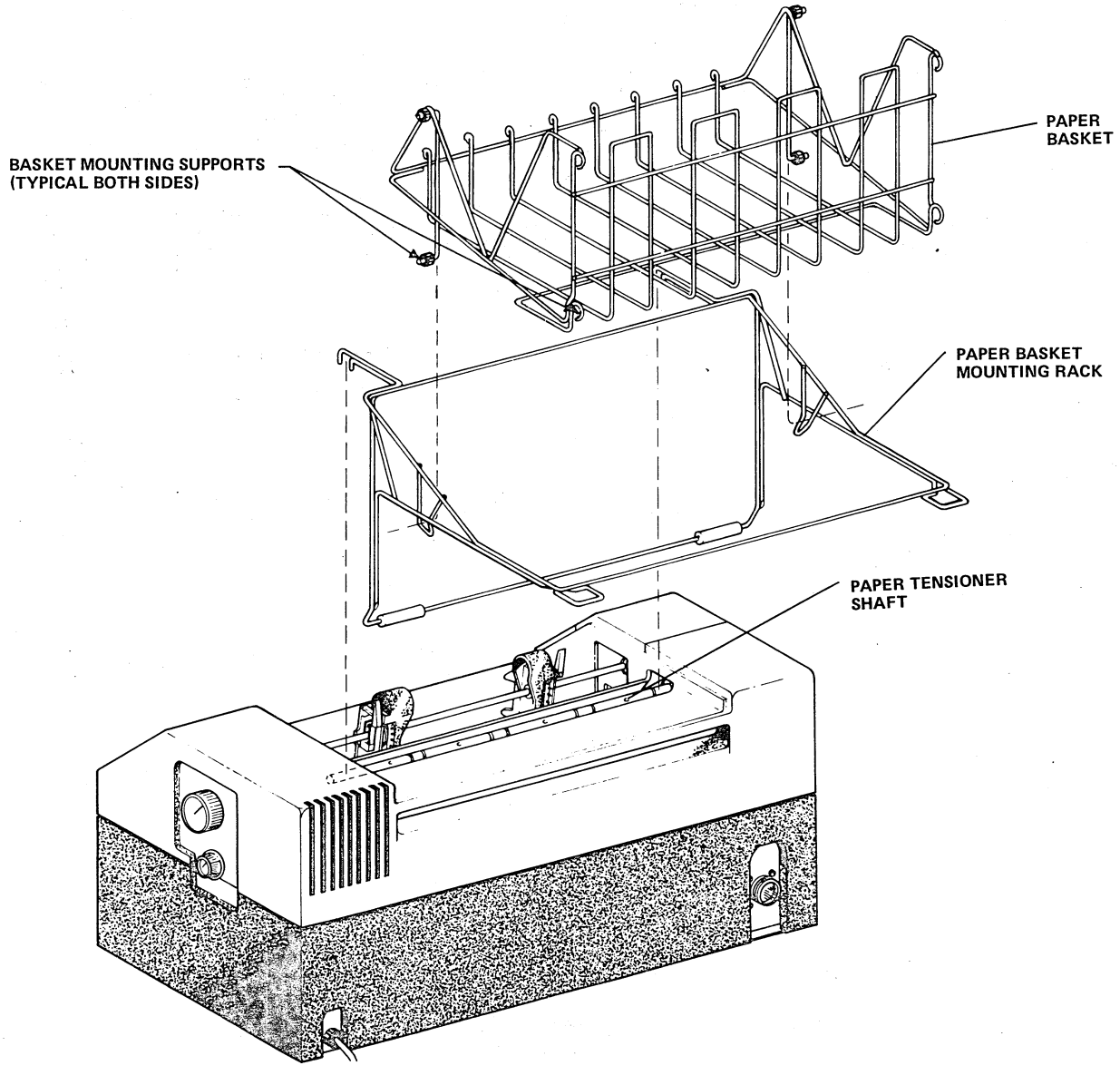

Figure 15-14. Paper Basket Installation

NOTE

To operate the printer with the cabinet removed, the interlock switch, located to the left of the control panel, must be pulled up. If the printer was turned off for any reason, it is necessary to reload the format tape before proceeding with testing.

1. Activate the test print switch located on the controller and print head board (figure 15-15).

NOTE

If the test print control panel switch is added, access to the card-mounted switch is not necessary.

This switch causes the printer to print the character B alternating with blanks across the page and then perform a single line advance, as illustrated in figure 15-15. Use this pattern to check vertical and horizontal alignment of the forms.

2. Check the operation of the 6/8 line-per-inch and compressed pitch features at this time.

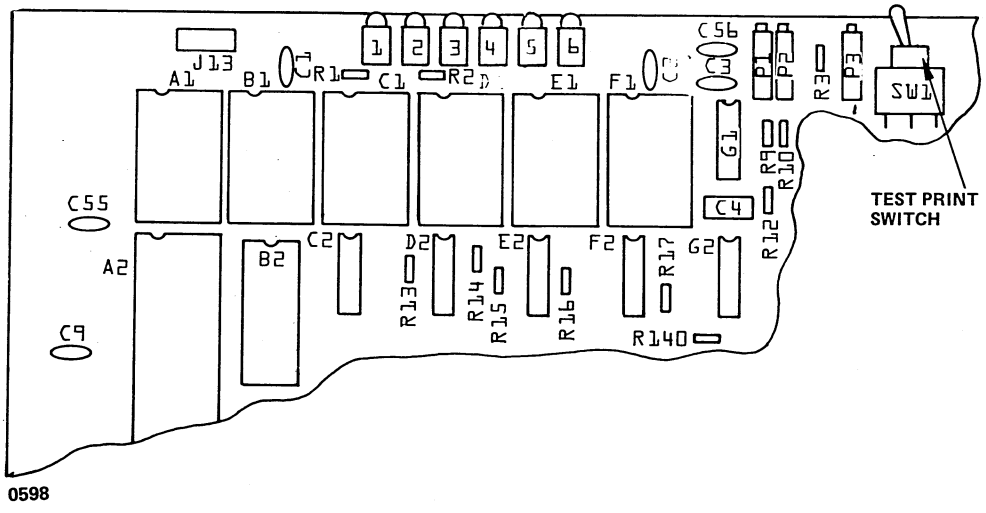

Figure 15-15. Controller and Print Head Board Test Print Switch

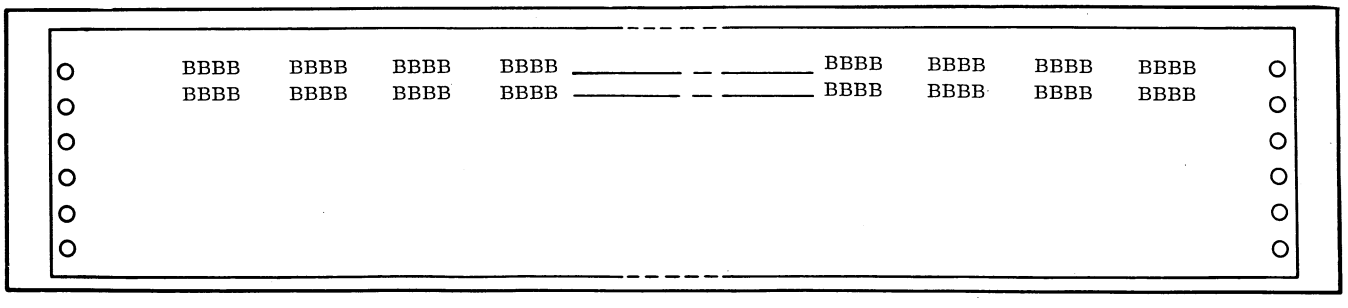

Figure 15-16. Test Print Sample

NOTE

Do not activate the 6/8 line-per-inch switch or compressed pitch switch while the printer is printing in the test print mode. Terminate the test print operation, actuate the option switch, and then re-enter the test print mode.

3. Activate the test print switch again to terminate the test print operation.

4. If diagnostic testing is to be performed, it should be accomplished at this time. Otherwise, turn the printer off and secure all panels. The installation is now complete.

DIAGNOSTIC TESTING

Perform the manual operating and diagnostic checks in the diagnostic decision logic tables (DDLTs) in volume 2 of the applicable system hardware maintenance manual.

NOTE

The diagnostic tests and routines described in the system hardware maintenance manual can only be performed after the console display, processor, and flexible disk drive or tape cassette (diagnostic load device) installations are complete.

The CYBER 18/1500 Series adapter subsystem provides the CYBER 18 Computer System with communication capability using a computer interface unit (EL101-A) and a computer interface expander (EL102-A). These computer interface equipments provide the CYBER 18 with I/O interface to up to 96 1500 Series peripheral devices. The computer and interface equipment may be separated a maximum of 200 feet (60.95 meters), but the standard cables provided with the subsystem are 40 feet (12.2 meters) long.

The CYBER 18/1500 Series adapter subsystem (figure 16-1) comprises one printed wiring assembly, one ±20 V dc power supply, associated signal cables and power cords, and two terminator resistor assemblies. Dc power (±5 V dc) for the 1500 Series adapter is obtained from the processor power source and from the ±20 V dc power supply provided with the subsystem. This adapter subsystem may be used with CYBER 18-10M, 18-20, 18-25, and 18-30 computer systems.

PARTS AND EQUIPMENT

Parts and Equipment	Equipment No.	Part No.
1500 Series Adapter	AT352-A	96756884
Power supply (±20 V dc)		39397000
A/Q cable		96750215
Interrupt cable		96750220
Power supply installation kit (number indicates quantity)		96750225
Power cord 3-conductor (1), Power cord 2-conductor (1), Cable assembly (1) Rail, mounting (2) Washer, flat, no. 10 (4) Washer, spring lock, no. 10 (4) Phillips screw, no. 10 (4) Nut, spring 1/4-20 (4) Screw, cap head, hex 1/4-20 (4) Jumper wire (-5 V dc) (1)		
Resistor terminator assembly		30001201

TOOLS REQUIRED

- Spin wrench, 5/16-inch
- Screwdriver, medium, Phillips
- Pliers, cutting (diagonals)

UNCRATING

If shipped separate from the system, the CYBER 18/1500 Series adapter, ±20 V dc power supply, cables, and installation kit are shipped in heavy-duty cardboard cartons. The items are buffered against shock and damage by industrial filler materials. No special instructions are required to remove the items from the carton.

CRATING

Refer to the uncrating instructions above.

INSPECTION

Inspect each item removed from the carton as follows:

1. Check the contents of the carton(s) against the packing list.
2. Examine the CYBER 18/1500 Series adapter (PWA) for broken or damaged parts.
3. Examine the power supply for damaged housing, broken parts, damaged meters, front panel scratches, and so forth.
4. Examine all cables for damage to connectors, cable cover, and so forth.

POWER REQUIREMENTS

Refer to section 1 for ac power requirements. The CYBER 18/1500 Series adapter obtains ±5 V dc power from the processor dc power source and the ±20 V dc power supply furnished with the subsystem.

INSTALLATION

POWER SUPPLY

The power supply is housed in the vertical cabinet that contains the computer interface unit (EL101-A). Ac power is obtained from the cabinet power distribution box. The ±20 V dc power from the power supply to the computer interface unit is routed through the power distribution box. The printed wiring assembly obtains ±20 V from the power supply via the computer interface unit and A/Q cable.

1. Using the four 10-32 screws, no. 10 lock washers, and flat washers, attach the power supply to the front mounting rails wherever space is available. If no

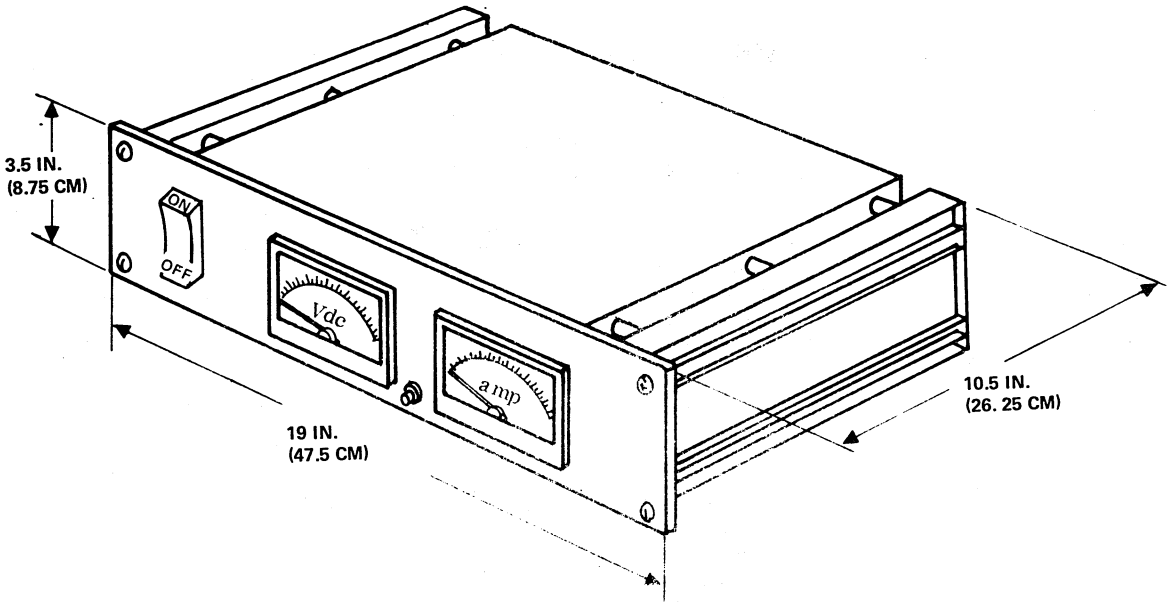

+20 V DC POWER SUPPLY

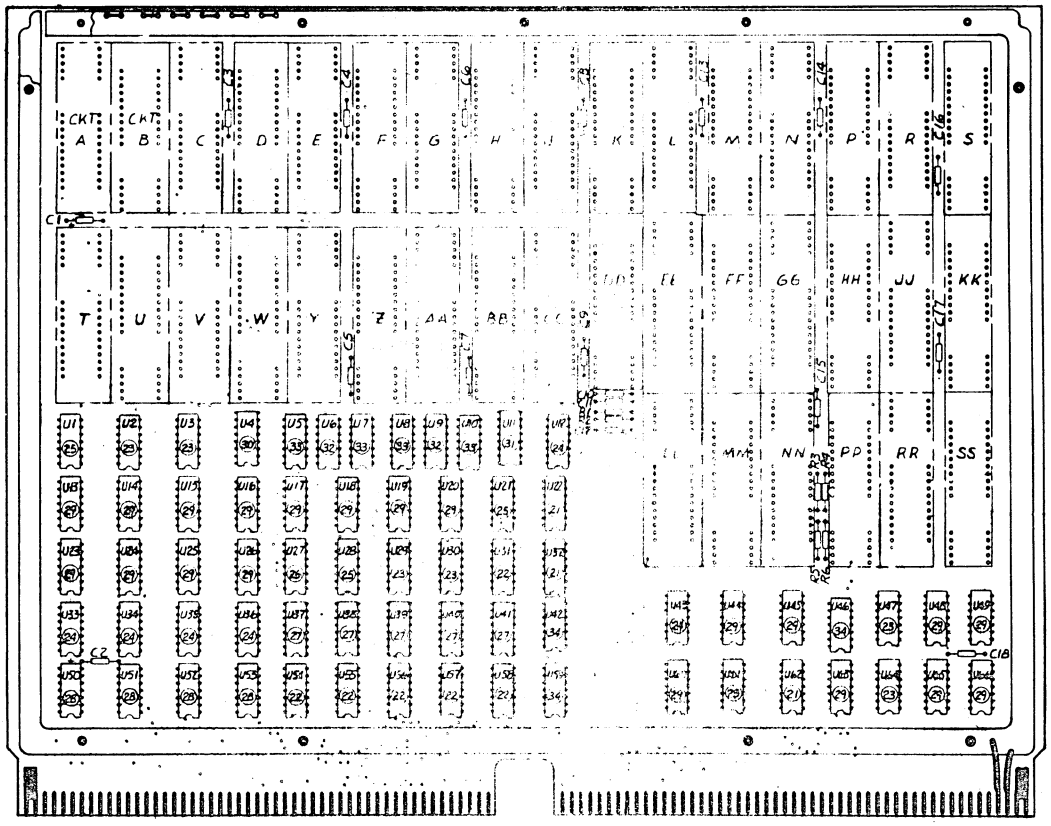

PRINTED WIRING ASSEMBLY

Figure 16-1. CYBER 18/1500 Series Adapter and Power Supply

space is available, use the 1/4-20 spring nuts and 1/4-20 hex head bolts to attach the mounting rails, supplied with the power supply installation kit, at the rear of the cabinet. Then attach the power supply to these rails at any convenient location.

2. Remove the cover that surrounds the toggle switch and two reset circuit breakers from the power distribution box located at the base of the computer interface unit cabinet. Then attach the ac and dc cables (figure 16-2).

3. Select the terminator power cord (part number 96744768) from the kit and insert the stripped and tinned wire ends through the power distribution box cable access clamp that has space available. Connect the white lead to terminal 8 and the black lead to terminal 7 of terminal block TB03 (figure 16-3).

4. Select the cable assembly (part number 38927906) from the kit and insert the stripped and tinned wire ends through the power distribution box cable clamp that has space available. Connect the white lead to terminal 8 and the black lead to terminal 7 of terminal block TB03 (figure 16-3).

5. Select the ac power cord (part number 96744767) from the kit and insert the stripped and tinned end through the power distribution box cable access clamp that has space available. Connect the white lead to terminal 6, the black lead to terminal 5, and the green lead to terminal 4 of terminal block TB03 (figure 16-3).

6. Route the ac power cord up one side of the cabinet to the power supply terminal block. Tie every 8 to 10 inches (200 to 250 millimeters) with the tie wraps included in the kit.

7. Connect the eyelet terminals to the power supply terminal block; black to AC line, white to AC neutral, and green to GND (figure 16-3).

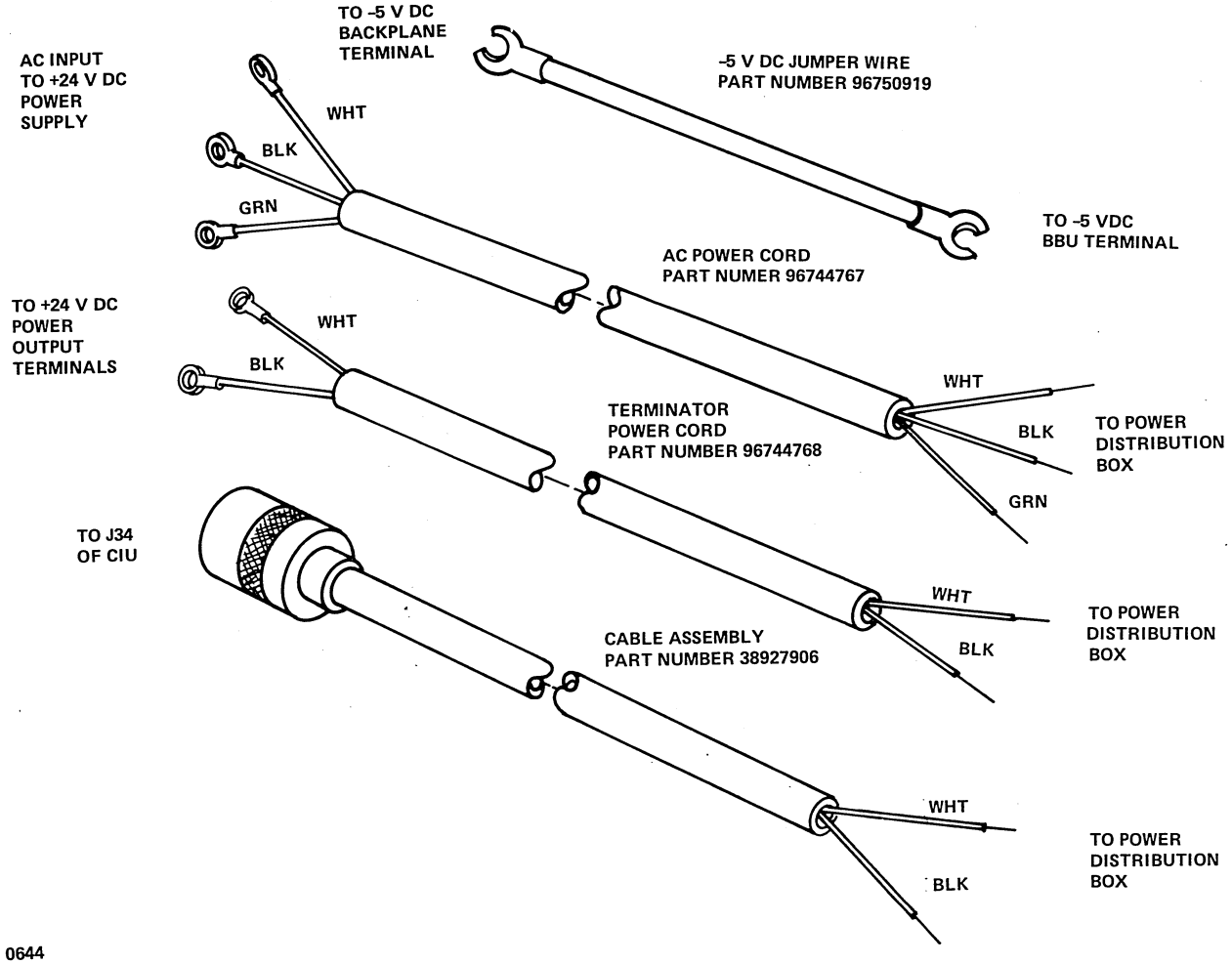

Figure 16-2. Power Supply Installation Kit Cables

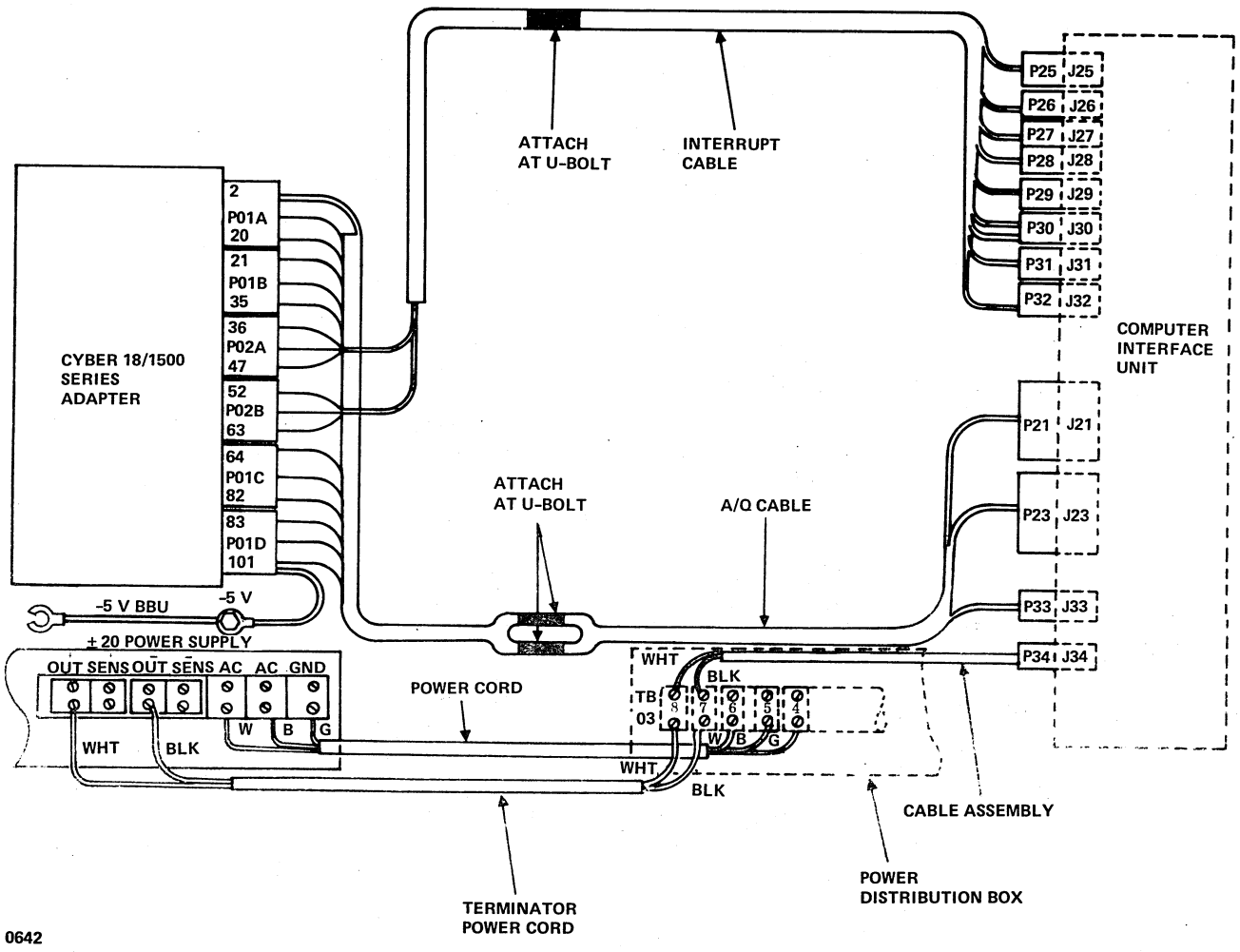

Figure 16-3. CYBER 18/1500 Series Adapter Cabling Diagram

8. Route the terminator power cord and cable assembly up the opposite side from the ac power cord. Tie every 8 to 10 inches (xx to xxx millimeters) with the tie wraps included in the kit. Route the termination power cord to the power supply and the cable assembly to the computer interface unit.

9. Attach the termination power cord eyelet terminals to the power supply terminal block; white to +OUT and black to -OUT (figure 16-3).

10. Connect the cable assembly connector to the TERM PWR connector (J34) of the computer interface unit (figure 16-3).

11. Replace the power distribution box dust cover. Replace the power supply terminal strips cover.

CYBER 18/1500 SERIES ADAPTER

The CYBER 18/1500 Series adapter utilizes an A/Q slot of the processor chassis.

CAUTION

Damage to the adapter may result if inserted into an A/Q-DMA slot, or if components are not toward the left side after insertion. Do not insert in a slot with deadstart capability. See section 1 for slot assignments.

1. Remove all three side panels of the equipment cabinet to gain access to the front and rear of the processor chassis. Pull the bottom of the panel outward approximately 45 degrees and then lift it upward to release it from the hooks.

2. Remove the dust cover from the processor chassis.

3. Insert the 1500 Series adapter in the assigned A/Q slot, ensuring that the components are to the left. After the board is inserted, apply firm pressure at the upper and lower front corners to ensure that the adapter is properly seated.

4. For adapter/CYBER 18 interrupt assignments and installation, refer to section 20. After assignments have been determined, record the assignments in the SMI pin number and CYBER 18 interrupt columns of table 16-1. For equipment number assignment, refer to section 20.

INTERFACE CABLE

The 1500 Series adapter subsystem contains two signal cables (A/Q and interrupt) that interface with the computer interface unit. The A/Q cable provides transmission of data and address codes. The interrupt cable provides transmission of interrupts (INT01 - INT08) from the computer interface unit to the adapter. The A/Q cable also has provisions for obtaining -5 V dc power from the processor power source for the adapter logic circuits.

CAUTION

Be sure that the terminator power supply and CPU power are turned off before proceeding with the following steps. Before reapplying power, double check that the backplane connectors of the A/Q cable and interrupt cable are matching with the right connector part pins. If connector and pins do not match correctly, damage to the system will occur when power is applied.

1. Remove the cover from the cable access box (figure 16-4).

2. Select the interrupt cable from the shipping carton and pass the inline (Berg) connectors (P02A and P02B) under the cabinet and up through the cable access box.

3. Attach connectors P02A and P02B to the adapter backplane connector at the pins designated on the marker strip (figures 16-4 and 16-5).

4. Attach the cable exposed braid area with a U-bolt to the side of the cable access box.

5. Select the A/Q cable from the shipping carton and pass the inline (Berg) connectors (P01A, P01B, P01C, and P01D) under the cabinet and up through the cable access box (figures 16-4 and 16-5).

6. Attach connectors P01A, P01B, P01C, and P01D to the adapter backplane connector at the pins designated on the connector marker strip (figure 16-5).

7. Attach the exposed braid area with two U-bolts to the side of the cable access box.

8. Attach the eyelet pigtail to the -5 V screw terminal on the processor backplane located in the lower left-hand corner.

9. Working at the processor backplane, install the jumper wire (part number 96750919) from the -5 V dc screw terminal located at the lower left-hand corner to the -5 V dc battery back-up (BBU) screw terminal located at the lower right-hand side.

10. Replace the cable access box cover.

11. Route the interrupt and A/Q cables to the cabinet containing the computer interface unit.

TABLE 16-1. INTERRUPT WIRE CONNECTIONS

1500 Series Interrupt Line	1500 Series Adapter Pin Number	SMI (Slot L) Pin Number †	Cyber 18 Mnemonics †
INT01	49		
INT02	249		
INT03	263		
INT04	251		
INT05	57		
INT06	58		
INT07	59		
INT08	60		

† Assign at system configuration to unused CPU line. (Refer to section 20 for CYBER 18 standard interrupt line assignments.)

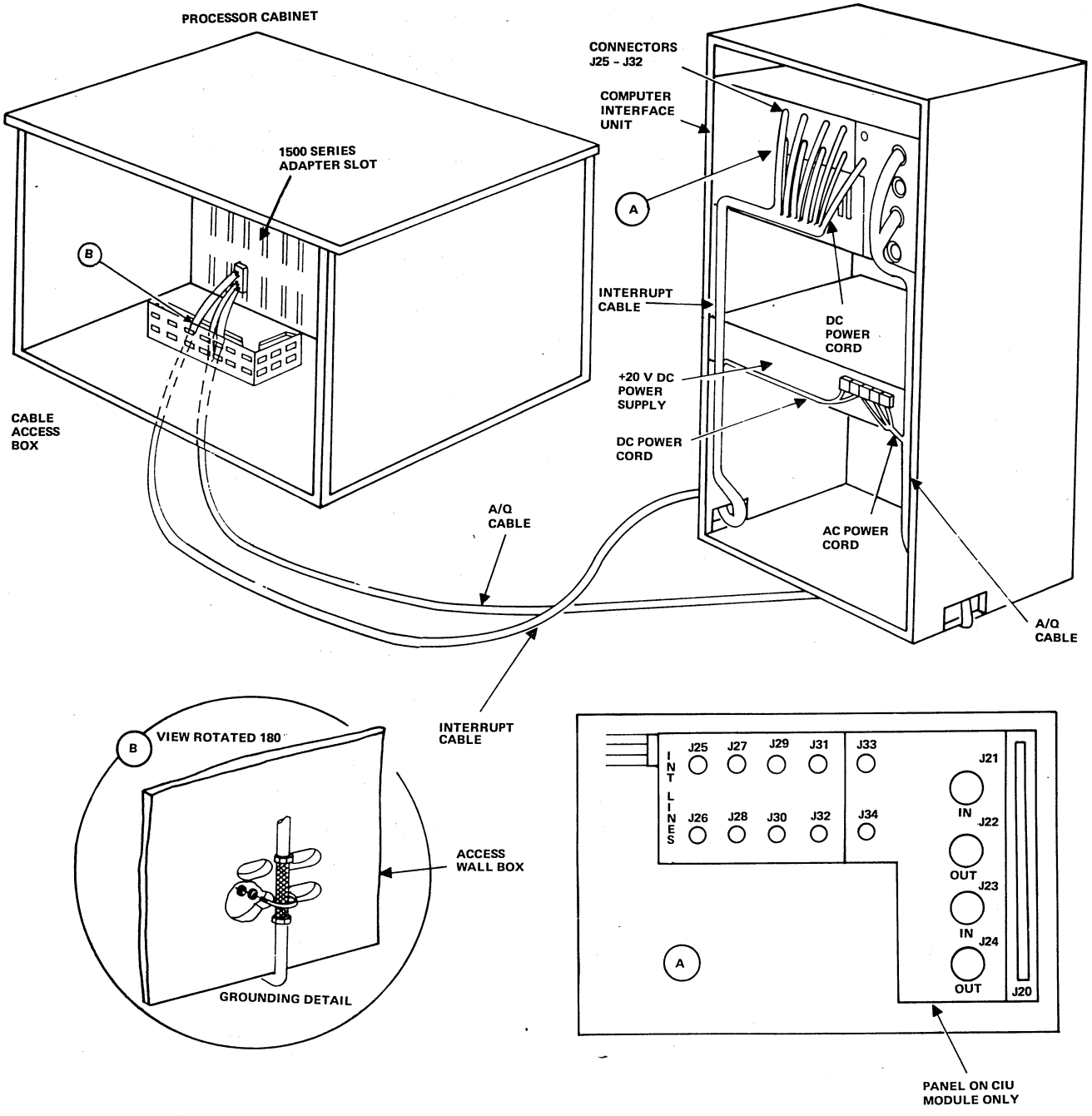

Figure 16-4. CYBER 18, 1500 Series Adapter Signal Cable Routing

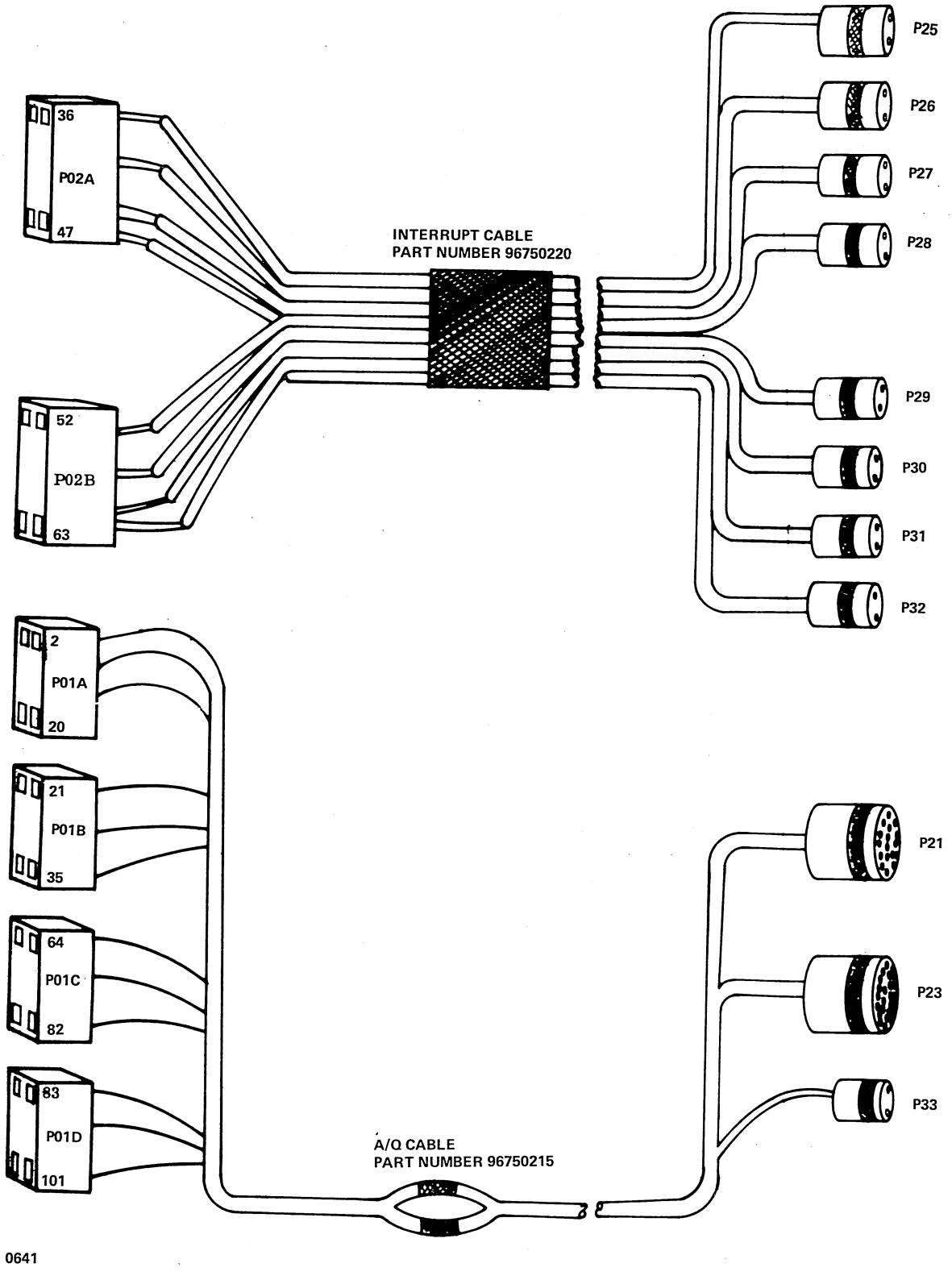

Figure 16-5. 1500 Series Adapter Signal Cables

12. Pass the cables through the access cutouts provided at the bottom rear area of each side. Route the cables up the cabinet sides and tie every 8 to 10 inches (200 to 250 millimeters) with tie wraps.

13. Attach connectors P25 through P32 of the interrupt cable to the corresponding computer interface unit receptacles, J25 through J32 respectively.

14. Attach connectors P21, P23, and P33 of the A/Q cable to the corresponding computer interface unit receptacles, J21, J23, and J33 respectively.

15. Dress and tie all cables as required by good workmanship practices.

16. Replace the processor cabinet side panels.

17. Connect the terminator resistor assemblies to J22 and J24.

DIAGNOSTIC TESTING

Perform diagnostic checks in accordance with the procedures contained in the Core-Resident Real-Time Maintenance System Users Guide.

NOTE

The diagnostic tests and routines described in this manual can only be performed after the console display, processor, and flexible disk drive or tape cassette (diagnostic load device) installations are complete.

The output card punch is designed to punch standard 80-column data cards from the output of the computer processor. The nominal punch rate is 50 cards per minute at 9600 baud. All signals to and from the output card punch are compatible with EIA standard RS232-C. A table-type cabinet provides the main support and housing for the output card punch including the control panel operator function switches. Card punch control components are located within the lower housing. The output card punch is connected via an interface signal cable assembly to the central processor eight-channel communication line adapter, normally located in slot K of the processor. Options included in the output card punch are dependent on the users application.

PARTS AND EQUIPMENT

Parts and Equipment	Equipment Number	Part Number
Output card punch	CF112-A	96750296
Signal interface cable, output card punch to processor eight-channel communication line adapter, 50 feet (15.2 meters)		96750283 or 88951575

TOOLS AND TEST EQUIPMENT

No special tools or test equipment are required to install the output card punch.

UNCRATING

The output card punch is shipped within a plastic bag to domestic customers or in a shipping carton for export. To uncrate the unit, proceed as follows:

1. Remove the plastic bag (domestic) or shipping carton (export) and slide the card punch from the pallet.
2. Remove the hold-down tape. Remove the shipping box that contains the output card punch loose equipment.
3. Remove the shipping strap from around the output card punch housing. Retain the strap for future use.
4. Remove the shipping feet from the legs and replace them with the adjustable screw feet from the shipping box. Retain the shipping feet for future use.

The output card punch is now ready for positioning at the intended operating area.

CRATING

The output card punch should be carefully packed for shipment in accordance with the following requirements.

1. Vacuum loose chad and dirt from inside the output card punch, especially from around operating assemblies and units.
2. Remove the adjustable screw feet and replace them with the shipping feet. Place the adjustable feet in the shipping box.
3. Remove the interposer driver board, wrap it with a shock absorbent material, and place it in the shipping box.
4. Place the shipping strap around the output card punch housing.
5. Tape down the following items in the specified positions. Refer to figures 17-1 and 17-2.
   a. Prime hopper block in the forward position
   b. Power cord inside the prime hopper
   c. Stacker follow block in the rear position
   d. Back cover to the sides
   e. Visible station and guide to the card bed
   f. Visible station cover in the down position
6. Include the operators manual and reference guide in the shipping box. Close and seal the shipping box with tape.
7. Place the output card punch on a pallet. Place the shipping box under the table of the output card punch. Cover the unit with a plastic cover. For export shipment, the output card punch and shipping box must be placed in an adequate carton.

INSPECTION

Following uncrating and positioning at the site area, inspect the output card punch as follows:

1. Inspect the exterior of the output card punch for obvious shipping damage such as surface dents, scratches, and impact damage.
2. Remove the top cover, front access door, and back access panel. Refer to figures 17-1 and 17-2 for access locations. Each of the access covers is held in place by screws. The main air duct is an integral portion of the back access panel and remains on the panel when the panel is removed.

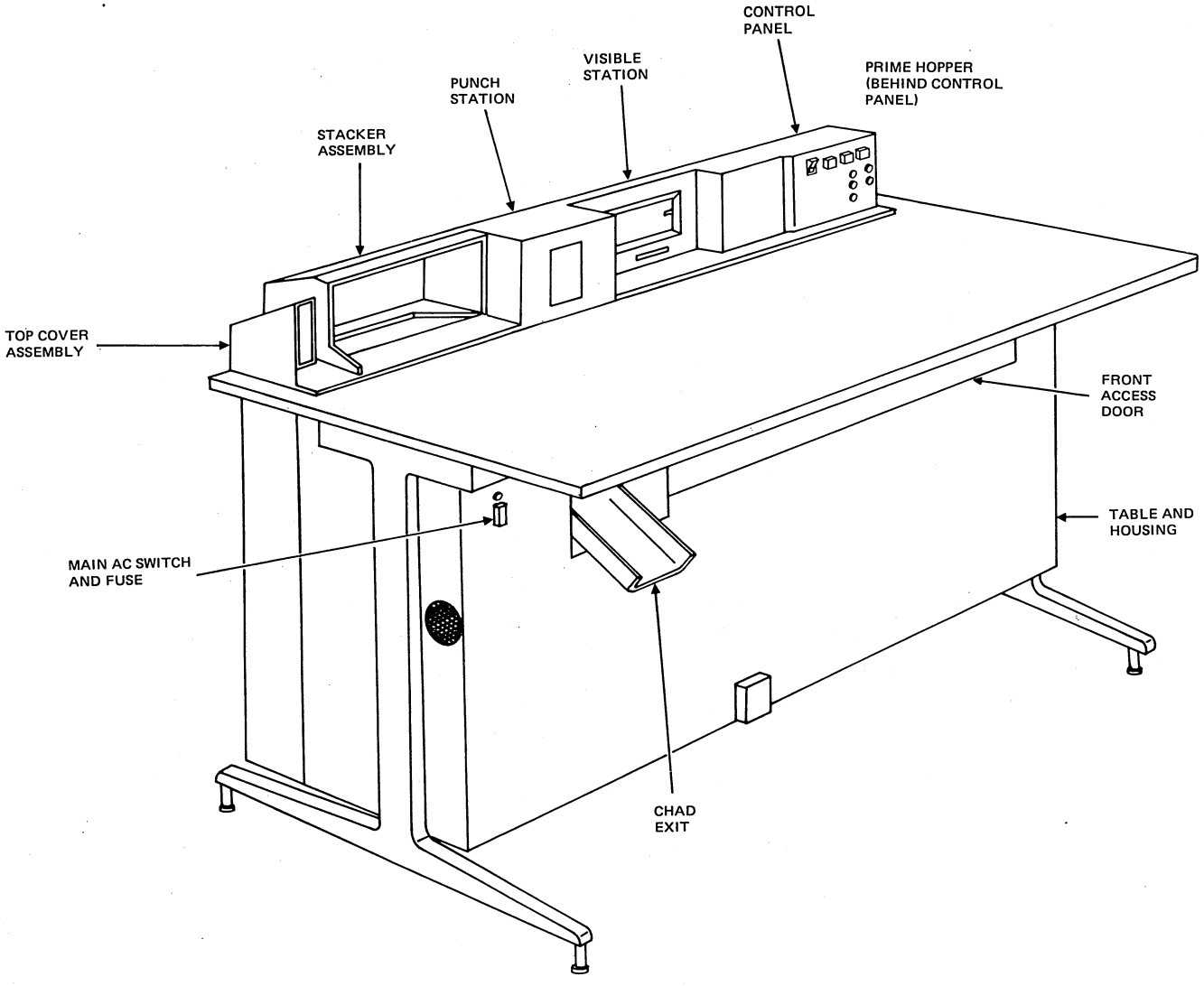

Figure 17-1. Card Punch, Front View

3. With the covers removed, inspect the interior and check for loose components.

4. Check to see that all printed wiring boards, cables, and harness connectors are securely plugged in and that wire connections to the terminals are tight.

5. Inspect to see that all power supply fuses (figure 17-3) are seated properly in their holders.

POWER REQUIREMENTS

The output card punch may be operated from an input voltage between 104 V ac and 128 V ac at 60 Hz or 190 to 235 V ac at 50 Hz. For power demands, refer to section 1.

POWER CABLING

The ac power cable is permanently attached inside the output card punch and extends from the left rear corner with a length of approximately 8 feet (2.4 meters). The standard three-wire cord is terminated with a three-prong, nonlocking, grounded plug for connection to 115 V ac, 60 Hz outlets. The power plug must be replaced to accommodate 220 V ac, 50 Hz outlets.

Prior to connecting the card punch to the site power source, verify the card punch power configuration as follows:

1. Utilizing appropriate measuring devices, determine the site voltage and frequency.

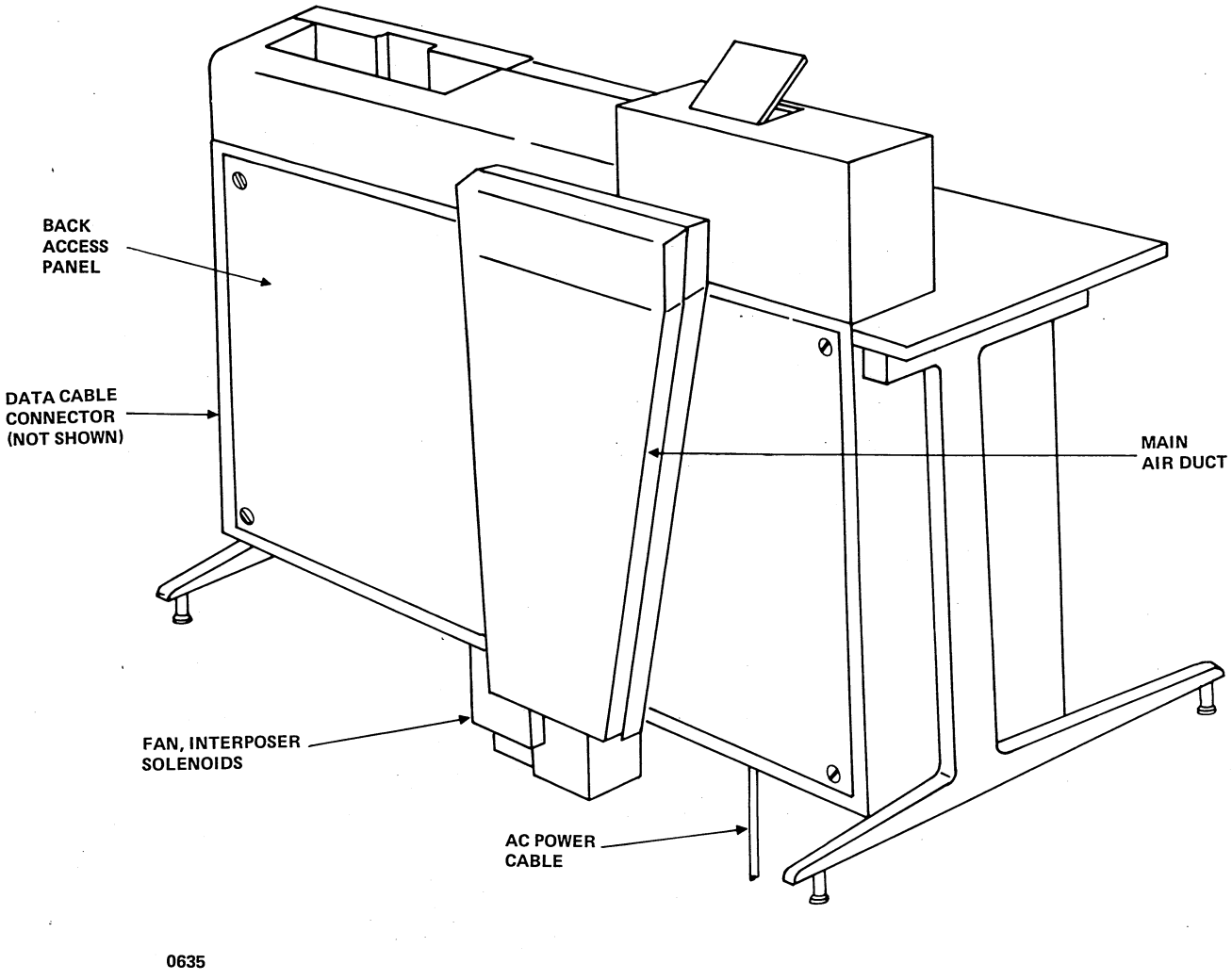

Figure 17-2. Output Card Punch, Rear View

2. Locate the ac terminal board in the lower right-hand corner of the card punch as viewed from the rear. Refer to figures 17-3 and 17-4.

3. If the card punch is to be operated from a nominal input voltage of 115 V ac, one jumper strap must be installed between terminals A and B, with the second strap installed between terminals C and D.

   For operation from a site nominal voltage of 220 V ac, install both jumper straps between terminals B and C.

4. Locate the ac motor control printed circuit board at the upper left-hand corner of the card punch as viewed from the rear. Refer to figure 17-5. Connected to the board are two plugs that provide power to the prime hopper and card registration motors. Within each plug is a plastic insert. For 60 Hz operation, ensure that the plastic insert is in the red wire connector. For 50 Hz operation, the plastic insert must be inserted into the black wire connector. When re-connecting the plugs onto the board, make sure that the two open connections go onto the two male pins.

No additional wiring or component changes are required to accommodate voltage and frequency differences.

SIGNAL CABLING

The output card punch is supplied with a punch-to-eight-channel-communication-line-adapter signal cable, 50 feet (15.2 meters) in length. Section 19 of this manual contains instructions for the local fabrication of the signal cable with a maximum permissable length of 100 feet (30.4 meters), if one is desired by the customer. A cable interface board is supplied with the eight-channel communication line adapter to accommodate connection of either the standard or locally fabricated signal cable. Refer to section 19 for information relating to channel selection from the eight-channel communication line adapter to the output card punch.

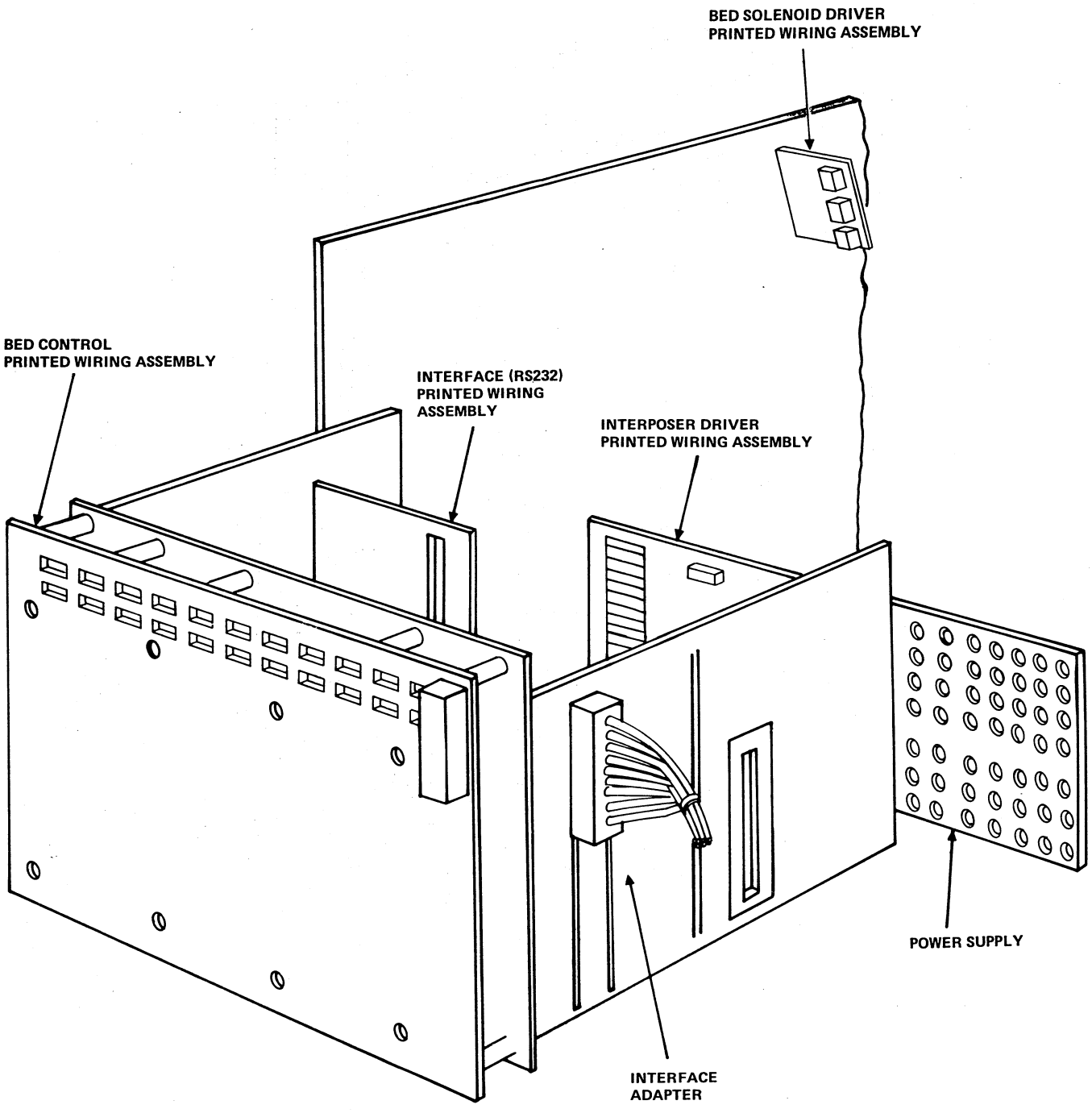

Figure 17-3. Power Supply and Logic Package Assembly

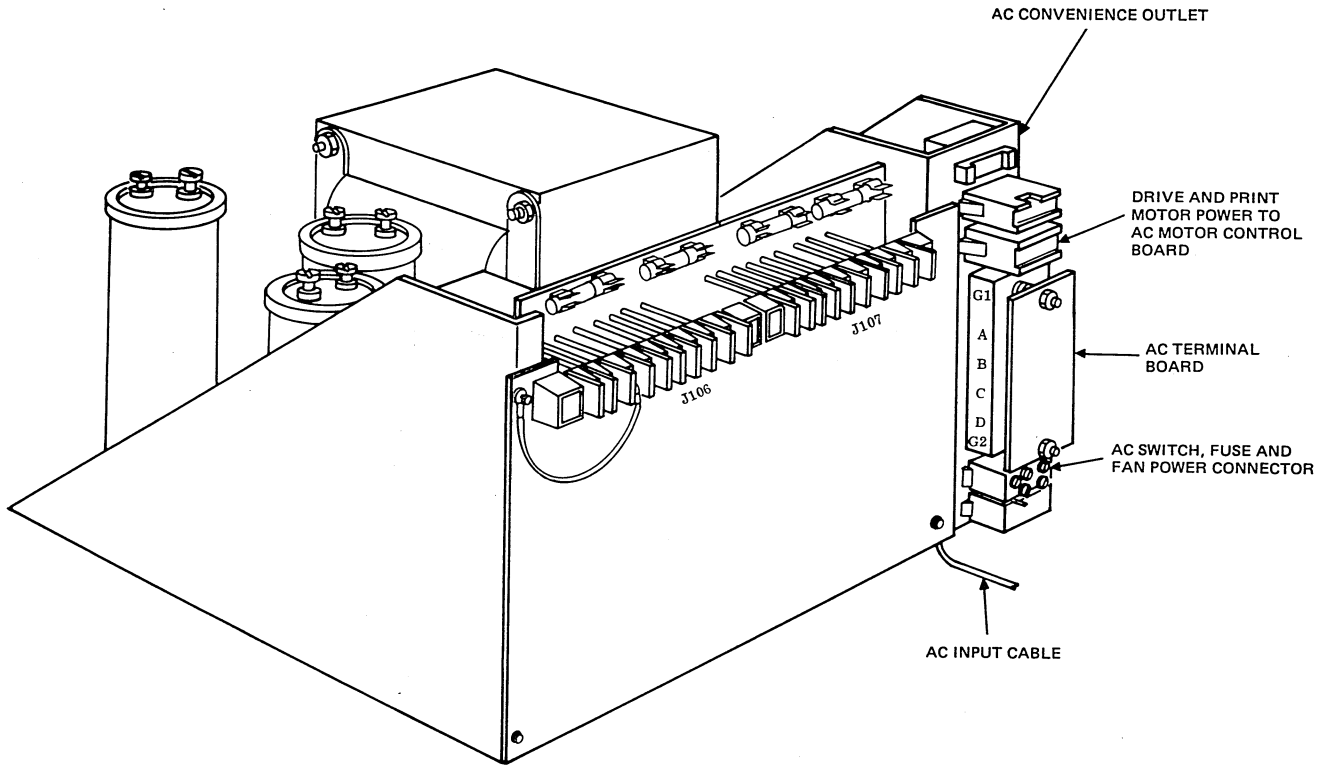

Figure 17-4. Power Supply, Connector and Terminal Boards

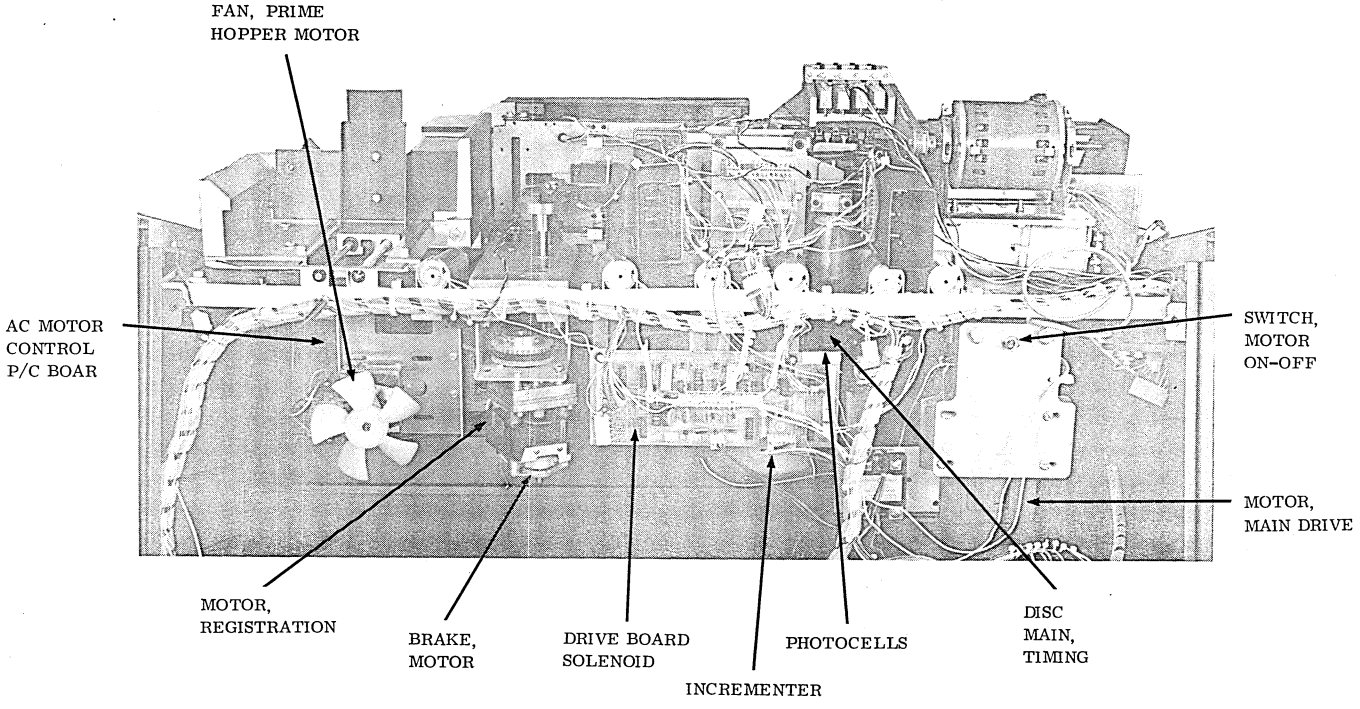

Figure 17-5. Card Bed Component Locations, Top-Rear View

1. Connect the signal cable to the data connector located on the right side of the output card punch housing.

2. Route the cable through the processor cable entry and up to the processor backplane slot assignment for the eight-channel communication line adapter.

3. Ensure that the signal cable is routed through the required strain relief positions and properly grounded. Refer to figure 17-6.

4. Connect the cable to the eight-channel communication line adapter interface board connector for the desired operating channel. Refer to figure 17-6 and section 19.

SWITCH/JUMPER VERIFICATION

Locate the interface printed wiring board at the rear of the output card punch. Refer to figure 17-3. Verify that the switches and jumpers on the interface printed wiring board are positioned as indicated in figure 17-7. The baud rate selection should be compatible with the rate selected on the eight-channel communication line adapter. Refer to section 19 of this manual for setting baud rates on the eight-channel communication line adapter.

INSTALLATION

To complete installation of the output card punch, proceed as follows:

1. With the output card punch positioned in its intended operating area, adjust the screw feet for proper height and to establish a firm and level condition for the operator.

NOTE

Allow approximately 2 inches (52 millimeters) behind the output card punch for air circulation. Adjacent output card punches may be situated side-by side but 3 inches (76 millimeters) should be allowed between output card punches installed back-to-back.

Approximately 18 inches (457 millimeters) of clearance should be available behind the output card punch for servicing, either by moving the output card punch or adjacent objects. Permanently mounted output card punches should be no closer than 18 inches (457 millimeters) from the nearest immovable object.

2. Remove the interposer drive board from the shipping box and install it in the assigned output card punch card slot. Refer to figure 17-3. Ensure that a firm connection is obtained to the interface connector.

3. Install and secure all covers to the output card punch housing.

4. Make sure that the ac power switch on the front of the housing is off and that the proper fuse is installed in the fuse holder. Refer to figure 17-1. Connect the power cable to the site outlet.

The output card punch is now ready for operation.

OPERATION

NOTE

The computer system basic operators panel, console display, and processor must be operational before the output card punch will function.

1. Load the data cards to be punched in the prime hopper located on the right side of the output card punch.

2. Turn the main ac power switch ON. The POWER and STOP lights on the output card punch control panel should light. The incrementer unit should begin driving.

3. Push the start button. If the output card punch is clear and data signals are being received, the cards should be ejected from the prime hopper and moved down the card bed for punching. The card processing operation continues until a fault indicator light comes on or until the operation is stopped voluntarily.

4. Card processing may be stopped at any time by pressing the STOP or CLEAR button.

5. Turn the ac power switch off.

For additional information and specific operating instructions, refer to the operators manual and reference guide provided with the output card punch.

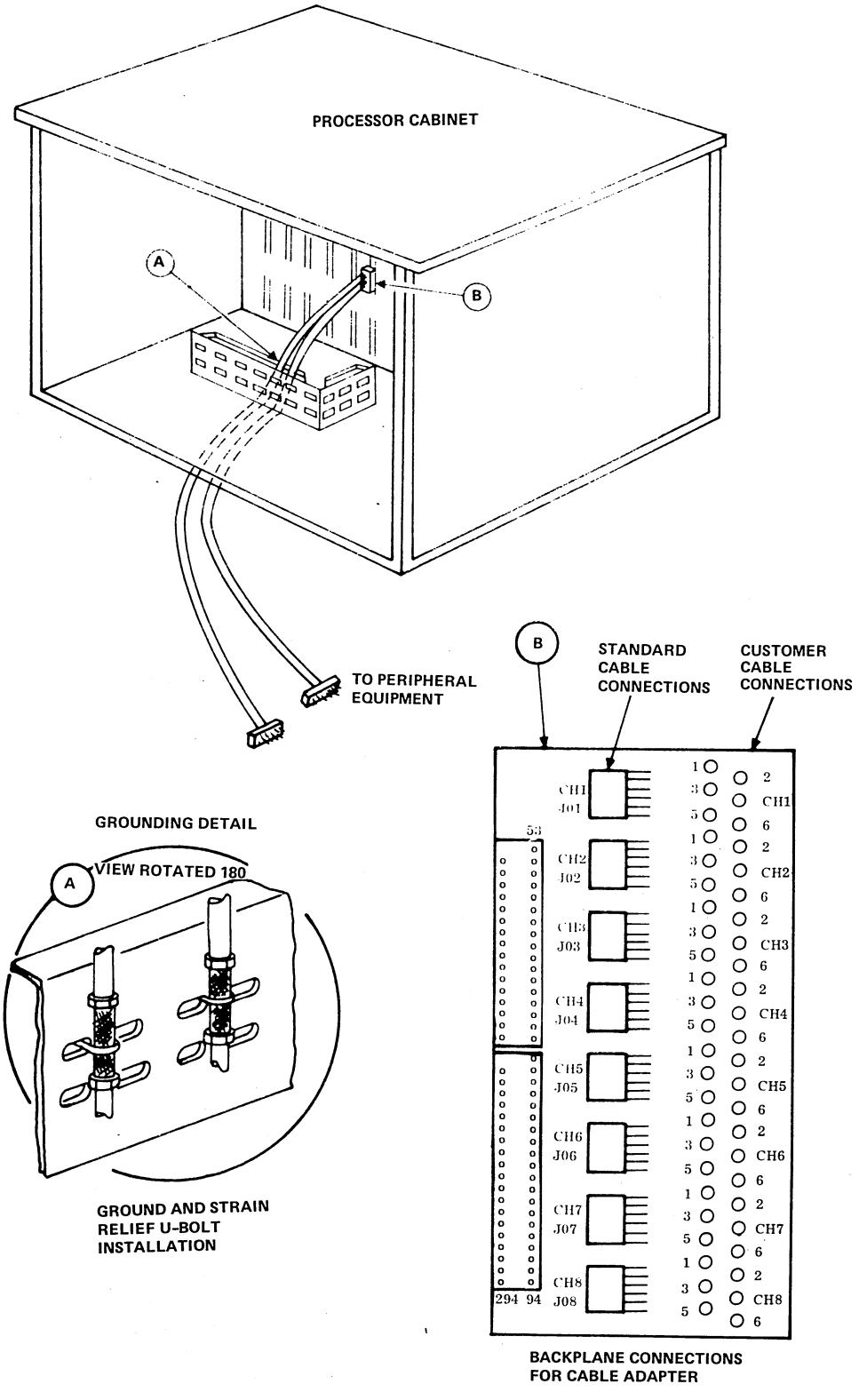

Figure 17-6. CYBER 18 Output Card Punch Signal Cable Installation

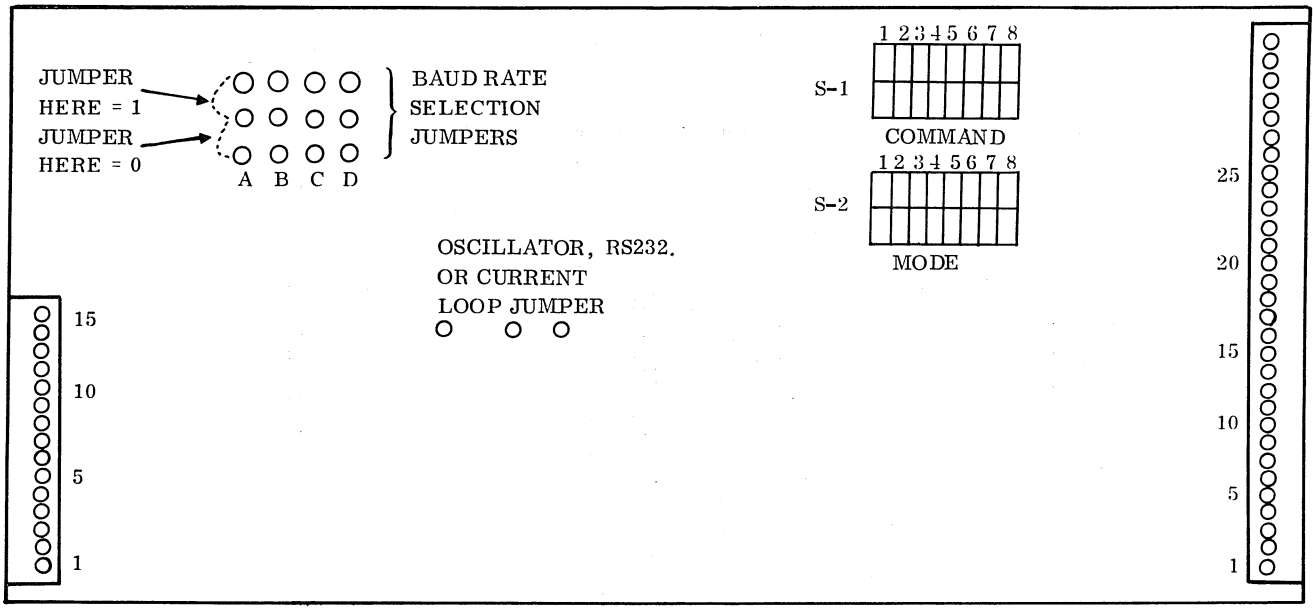

A	B	C	D	BAUD RATE
0	0	0	1	50
0	0	1	0	75
0	0	1	1	110
0	1	0	0	134.5
0	1	0	1	150
0	1	1	0	300
0	1	1	1	600
1	0	0	0	900
1	0	0	1	1200
1	0	1	0	1800
1	0	1	1	2400
1	1	0	0	3600
1	1	0	1	4800
1	1	1	0	7200
1	1	1	1	9600 †

† DENOTES REQUIRED CYBER 18 SETTING

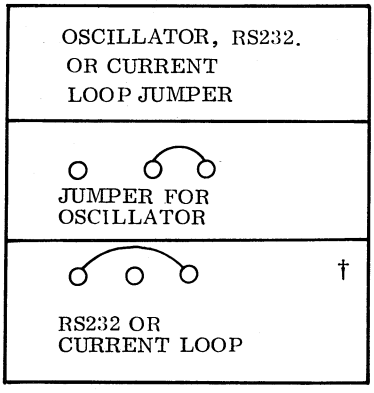

PEN = 1 PARITY ENABLED
PEN = 0 PARITY DISABLED
E/O = 1 EVEN PARITY
E/O = 0 ODD PARITY

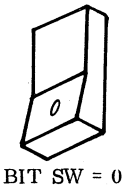

BIT SW = 0

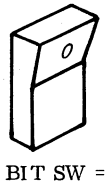

BIT SW = 1

S-1 COMMAND

ER	RTS	S 1R	BRK	RXE	DTR	TX EN	EH	
0	1	0	0	1	1	1	0	†
1	2	3	4	5	6	7	8	

S-2 MODE

L2	S1	E/O	PEN	S2	L1	B1	B2	
1	1	0	0	0	0	0	1	†
1	2	3	4	5	6	7	8	

B1	0
B2	1

BAUD RATE FACTOR (ONLY X16 ALLOWED)

NUMBER OF DATA BITS

	5	6	7	8
L1	0	1	0	1
L2	0	0	1	1

NUMBER OF STOP BITS

1	1-1/2	2
1	0	1
0	1	1

0639

Figure 17-7. Interface (RS232) Jumper and Switch Settings

With a 64-character set, the CT103-B Band Line Printer prints 600 lines per minute, the CT105-B prints 300 lines per minute, and the CT106-A prints 900 lines per minute. The CT103-B, CT105-B, and the CT106-A provide a standard, 136-column format. Each printer is housed in a quietized cabinet that sets on heavy-duty casters for maneuverability. This standard 64-character-set printer configuration provides ASCII character reception, 10 characters per inch, 6 or 8 lines per inch, a self-test print feature, and a 1-line buffer. The physical configuration includes an operator's control panel, paper basket, and a 20-foot (6.1-meter) interface cable.

The multiequipment controller resides in slot J of the processor. For alternate slot assignments and restrictions, see section 1. A standard 20-foot (6.1-meter) interface cable is supplied. An optional interface cable of up to 50 feet (15.3 meters) may be employed to connect the printer to the backplane connector of the card reader/line printer controller. The card reader/line printer controller contains equipment code, program protect, interrupt, and controller enable/disable jumpers.

PARTS AND EQUIPMENT

Parts and Equipment	Equipment Number	Part Number
Line printer (300 line/minute)	CT105-B	95455501
Line printer (600 line/minute)	CT103-B	95450401
Line printer (900 line/minute)	CT106-A	95458200
Print band†		95461811
Printer ribbon		
Printer paper††		
Cable assembly, 20 feet (6.1 meters) - Normally supplied as part of the CY117 Finalization Kit		88894600 or 96870921 or 96870925†††
Cable assembly, 50 feet (15.3 meters)		88894603 or 96870924 or 96870928†††

TOOLS REQUIRED

The following tools are required:

- 9/16-inch open-end wrench
- Fork lift or suitable lifting device
- Pry bar and/or claw hammer
- Metal cutting sheers
- 3/4-inch socket wrench

UNCRATING

Before uncrating the printer, use a fork lift or other suitable handling equipment to transport the crated unit to the proposed operation area. Remove the crating material from the printer and the printer from the pallet. (See figure 18-1).

WARNING

Use caution when cutting the strapping, since it may whip when cut.

1. Using metal cutting sheers, cut the strapping surrounding the crate.
2. Using a pry bar and/or claw hammer, remove the nails from the wooden crate and lift the crate off the printer.
3. Lift the cardboard box off the printer.
4. Remove the plastic bag covering the printer and remove the shipping bolts from the four corners of the pedestals.
5. Remove and unpackage the four leveling pads or casters.
6. Using a lifting device, remove the printer from the pallet. The lifting force should be applied below the pedestal legs or the lower cross frame as close to the pedestal legs as possible. Ensure that adequate padding is used to prevent scratching exterior surfaces.

†It is recommended that the customer order a spare band before system installation.

††1- to 4-part forms - Use utility-grade paper or better.
5- to 6-part forms - Use premium-grade paper, such as standard register stock no. 1471 (or an equivalent).

†††Meets FCC EMI requirements.

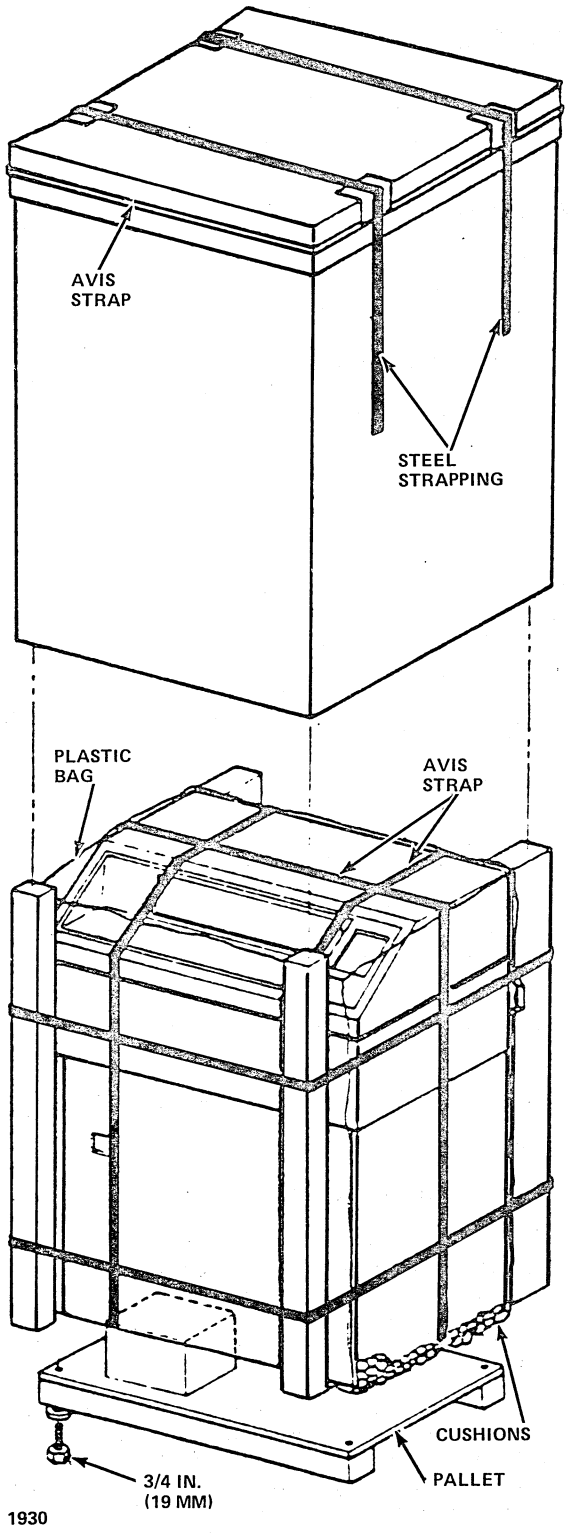

Figure 18-1. Band Line Printer Crating

7. While the printer is being supported by a lifting device, attach leveling pads or casters. One leveling pad or caster is screwed into each corner of the pedestal at the same threads where the shipping bolts hold the printer to the pallet.

8. With the lifting device or casters, if provided, move the printer into its final operating position and proceed with installation.

CRATING

The equipment should be crated in the reverse order of the uncrating procedure.

INSTALLATION

The printer is designed to provide maximum access to all areas of the printer (see figure 18-2). When the printer bonnet is closed, access is provided to the control panel, forms stacks, and the main circuit breaker. When the bonnet is open, access is provided to the forms advance controls, the forms tractors, print gate, and the optional programmable forms length selector. The print gate can then be swung open to allow access to the forms path. With the gate open, the protective cover can be removed from the gate to allow access to the print band and print ribbon for easy replacement. For maintenance purposes, the front panel, which is secured by quarter-turn fasteners, may be removed to allow access to the blower assembly, the power transformer, the line filter, and the main circuit breaker. For access to the rear of the printer, the bonnet must be removed. This is accomplished by first removing the grounding strap attached to the bonnet, opening the bonnet, and then lifting it straight up until the counter-balances are clear of the cabinet base. Once the bonnet has been removed, the paper shroud and the rear protective plate can be removed. These two assemblies cover the logic rack. When they are removed, the logic cards can be swung out to provide easy access to all the board components for troubleshooting purposes.

PREPARATION

1. Remove the printer bonnet. Open fully and raise at the back corners to separate it from the hinge.

2. Remove the tape that secures the print gate and format reader cover.

3. Remove the shipping lock bracket from the left end of the print gate and print frame.

4. Open the print gate, and remove the cardboard wedge from the left side of the hammer bar.

5. Remove the Ty-Wrap from the left end of the hammer bar.

6. Remove the blocks of plastic foam from beneath the control panel, vertical servo motor, and each band drive pulley.

7. Remove the four blocks, one mounted in each corner, between the print head and the pedestal.

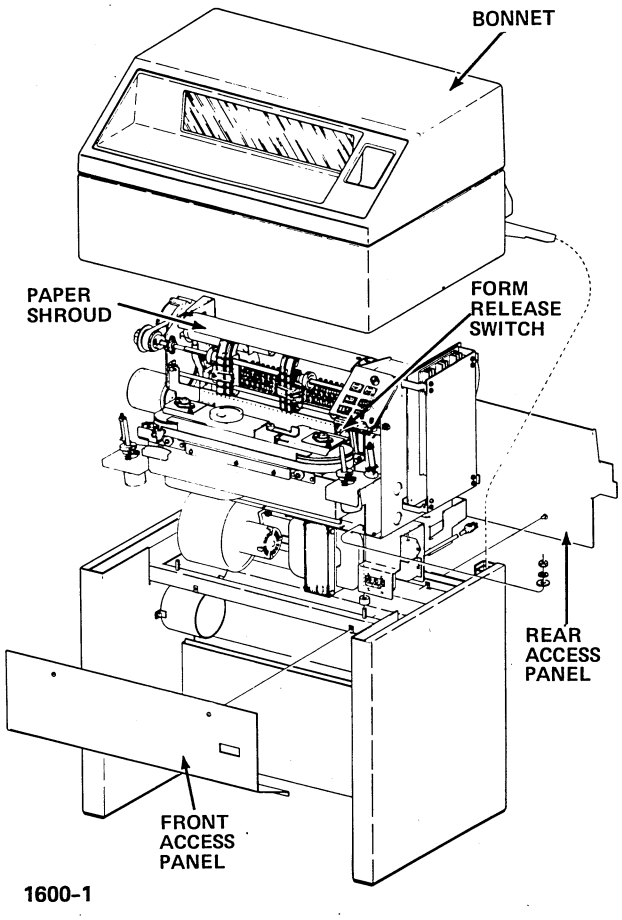

Figure 18-2. Printer Access

POWER VARIATION CORRECTION

The printer as delivered from the factory is wired for 120 volts, 60 Hz with a 50/60 Hz transformer installed. To modify the input configuration, perform the applicable procedure below (see figures 18-3 and 18-4).

CAUTION

Disconnect the printer power cable from the power source before attempting any power wiring changes.

Wiring changes required for conversion from 120 to 100 V ac, 60 Hz, power input are as follows:

- Disconnect the ac input from 1TB3 pin 2 and move it to 1TB3 pin 3.

Wiring changes required for conversion from 120 V, 60 Hz, to 220 V, 50 Hz, power input are as follows:

1. Disconnect transformer lead 5A from 2PC1-TB1 pin 9 and connect it to 1TB3 pin 10. Disconnect transformer lead 5 from 1TB3 pin 10 and connect it to 2PC1-TB1 pin 9.
2. Disconnect transformer lead 7A from 2PC1-TB1 pin 10 and connect it to 1TB3 pin 11. Disconnect transformer lead 7 from 1TB3 pin 11 and connect it to 2PC1-TB1 pin 10.
3. Disconnect transformer lead 8A from 2PC1-TB1 pin 4 and connect it to 1TB3 pin 12. Disconnect transformer lead 8 from 1TB3 pin 12 and connect it to 2PC1-TB1 pin 4.
4. Disconnect transformer lead 10A from 2PC1-TB1 pin 5 and connect it to 1TB3 pin 13. Disconnect transformer lead 10 from 1TB3 pin 13 and connect it to 2PC1-TB1 pin 5.
5. Disconnect transformer lead 11A from 2PC1-TB1 pin 1 and connect it to 1TB3 pin 14. Disconnect transformer lead 11 from 1TB3 pin 14 and connect it to 2PC1-TB1 pin 1.
6. Disconnect transformer lead 13A from 2PC1-TB1 pin 2 and connect it to 1TB3 pin 15. Disconnect transformer lead 13 from 1TB3 pin 15 and connect it to 2PC1-TB1 pin 2.
7. Check that the leads were moved correctly by comparing 2PC1-TB1 inputs to the following checklist:

TB1 Pin	Transformer Lead
9	5
11	6
10	7
4	8
8	9
5	10
1	11
3	12
2	13

8. Disconnect transformer lead 1E from 1TB3 pin 2 and connect it to 1TB3 pin 6.
9. Disconnect transformer lead 1F from 1TB3 pin 3 and connect it to 1TB3 pin 7.
10. Disconnect transformer lead 1C from 1TB3 pin 8 and connect it to 1TB3 pin 5.

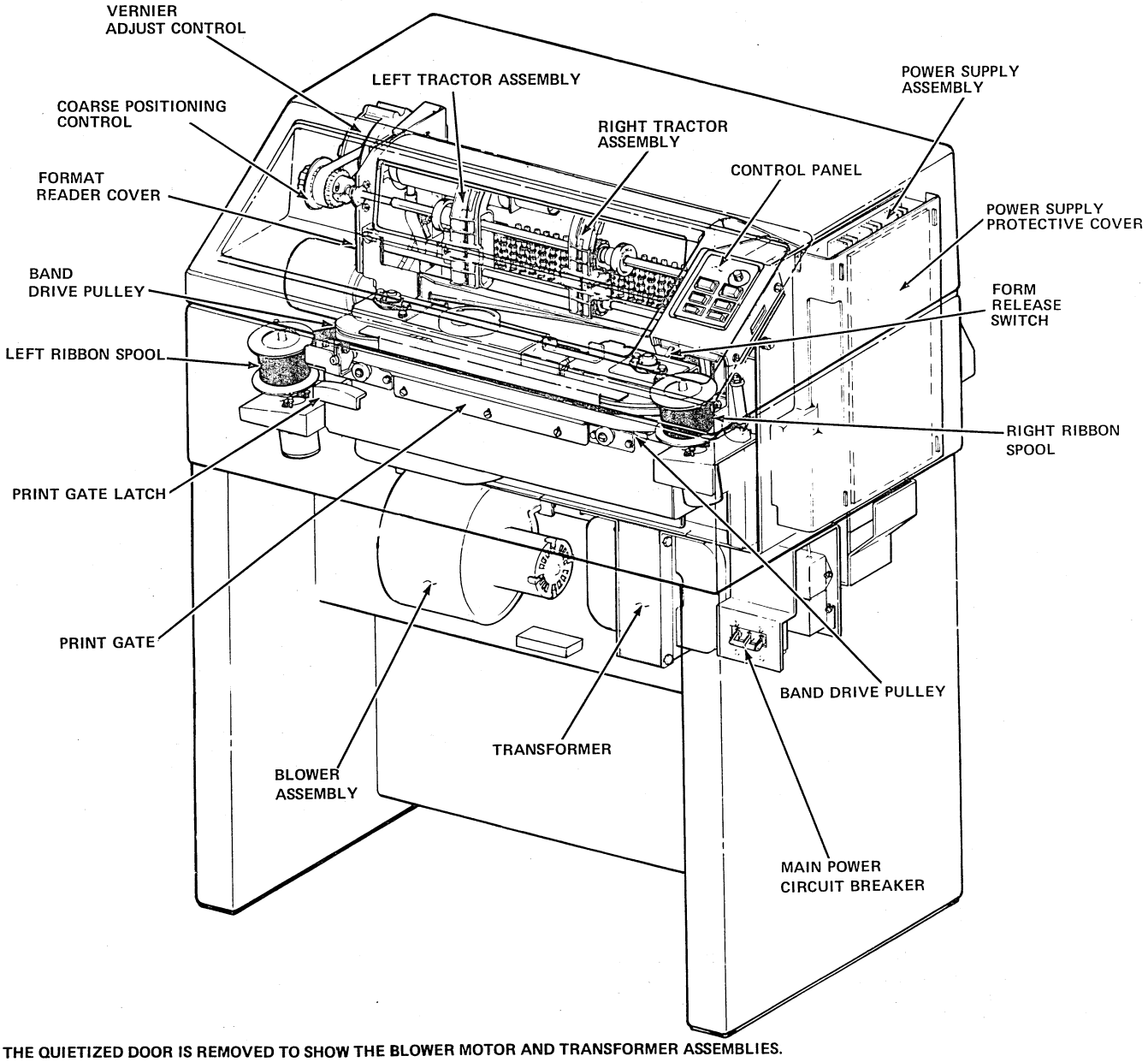

THE QUIETIZED DOOR IS REMOVED TO SHOW THE BLOWER MOTOR AND TRANSFORMER ASSEMBLIES.

1641

Figure 18-3. Printer Parts Identification

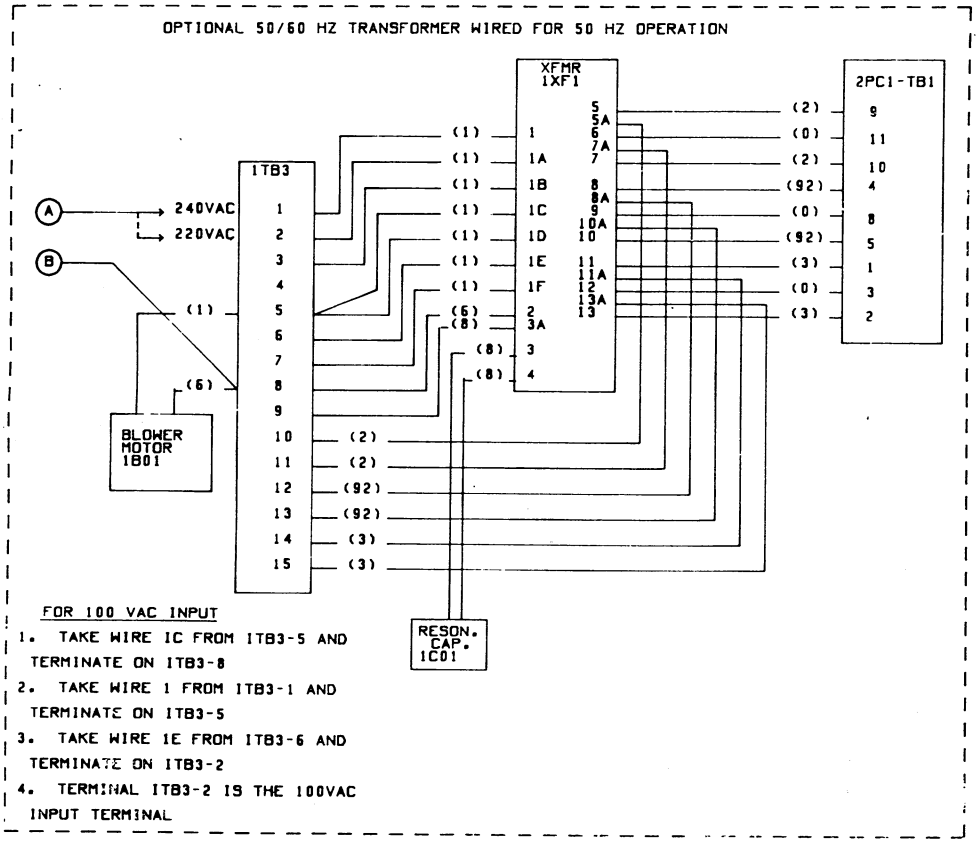

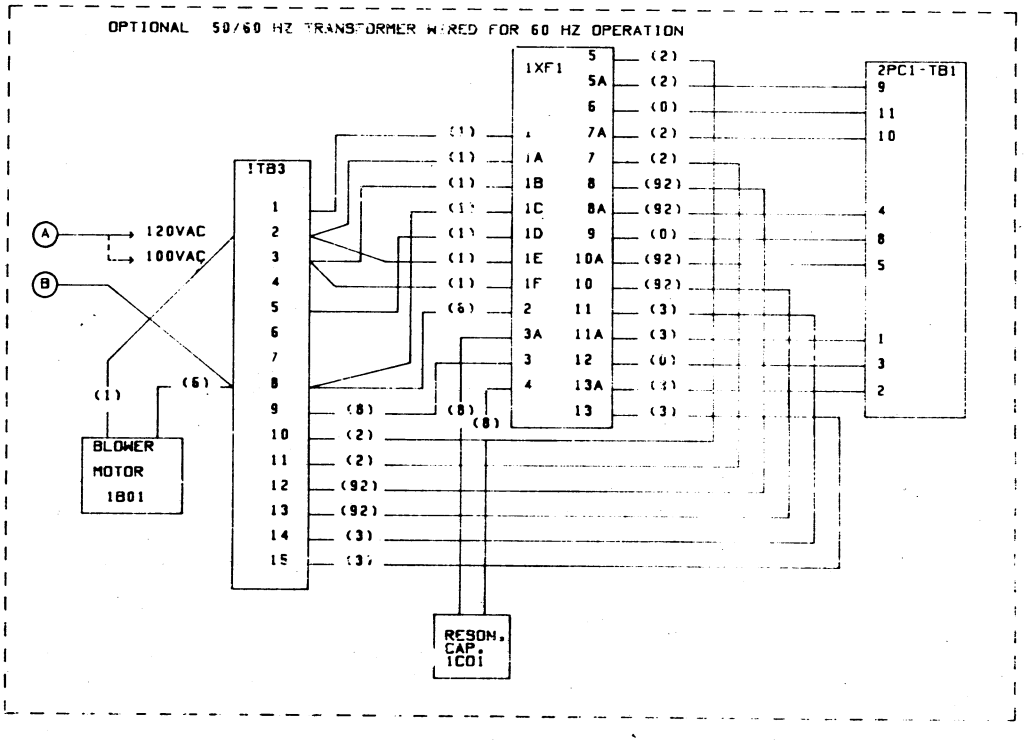

Figure 18-4. Power Variation Connections

11. Disconnect transformer lead 3A from the resonant capacitor 1C01 and connect it to 1TB3 pin 9. Disconnect transformer lead 3 from 1TB3 pin 9 and connect it to 1C01.

12. Check the transformer primary wiring to 1TB3 against the following checklist:

1TB3 Pin	Transformer Lead(s)
1	1
2	1A
3	1B
4	blank
5	1C, 1D
6	1E
7	1F
8	2
9	3A

13. Disconnect the black blower motor lead to 1TB3 pin 2 and connect it to 1TB3 pin 5. Disconnect the brown EVFU reader motor lead if one is connected to 1TB3 pin 2, and connect it to 1TB3 pin 5. (Early units have the EVFU motor lead spliced into the blower motor lead.)

14. The printer is now ready for 50 Hz, 220 V operation.

Wiring changes required for conversion from 120 V, 60 Hz, to 240 V, 50 Hz, power input are as follows:

1. Perform the 120 to 220 V conversion procedure above.

2. Move the ac input wire from 1TB3 pin 2 to 1TB3 pin 1.

Wiring changes required for conversion from 120 V, 60 Hz to 100 V, 50 Hz power input are as follows:

1. Perform steps 1 through 7, 9, 11, and 13 of the 120 to 220 V, 60 to 50 Hz procedure.

2. Disconnect transformer lead 1 from 1TB3 pin 1 and connect it to 1TB2 pin 5.

3. Check the transformer primary wiring to 1TB3 against the following checklist:

1TB3 Pin	Transformer Lead(s)
1	blank
2	1A and 1E
3	1B
4	blank
5	1 and 1D
6	blank
7	1F
8	2 and 1C
9	3A

4. Input ac is connected to 1TB3 pin 3.

CHECKOUT

Remove the rear access panel (figure 18-2), and ensure that all connectors are securely attached and the circuit cards are installed. Replace the rear access panel.

1. Connect the power cable connector to a compatible ac power source.

2. Set the MAIN POWER circuit breaker (figure 18-3) to the up position. Observe that the blower and the band motors operate. The ribbon motors do not operate until a print character is issued, and they stop approximately 1 second after the last print character is issued. The stop indicator illuminates and the band motor stops after 30 seconds.

PRINT BAND INSTALLATION

The print band contains the printable character font. The font supplied with the standard printer is 64 characters with either of two pitches (standard or compressed). Optional fonts (48, 96, or 128 characters) of standard or compressed pitch may also be supplied. Ensure that the print band received agrees with the customer's order.

CAUTION

When handling the print band, reasonable care should be exercised to maintain band reliability. The band should not be twisted, scratched, or dented. Also, do not allow the band to bend smaller than a 4-inch (102 millimeter) radius.

1. Open the print gate (figure 18-3), and remove the protective cover by carefully twisting on the two friction fasteners.

2. Rotate the band tension lever 180 degrees clockwise until it contacts the stop (figure 18-5).

3. Loop the print band around each print band pulley with the character timing marks down.

4. Rotate the band tension lever counterclockwise 180 degrees until it contacts the stop. This places tension on the band.

5. Rotate the manual band advance knob in the direction indicated by the arrow until the band rides on the band edge guide rollers.

WARNING

If the print gate is closed and the protective cover interlock is engaged when power is on, the band will revolve.

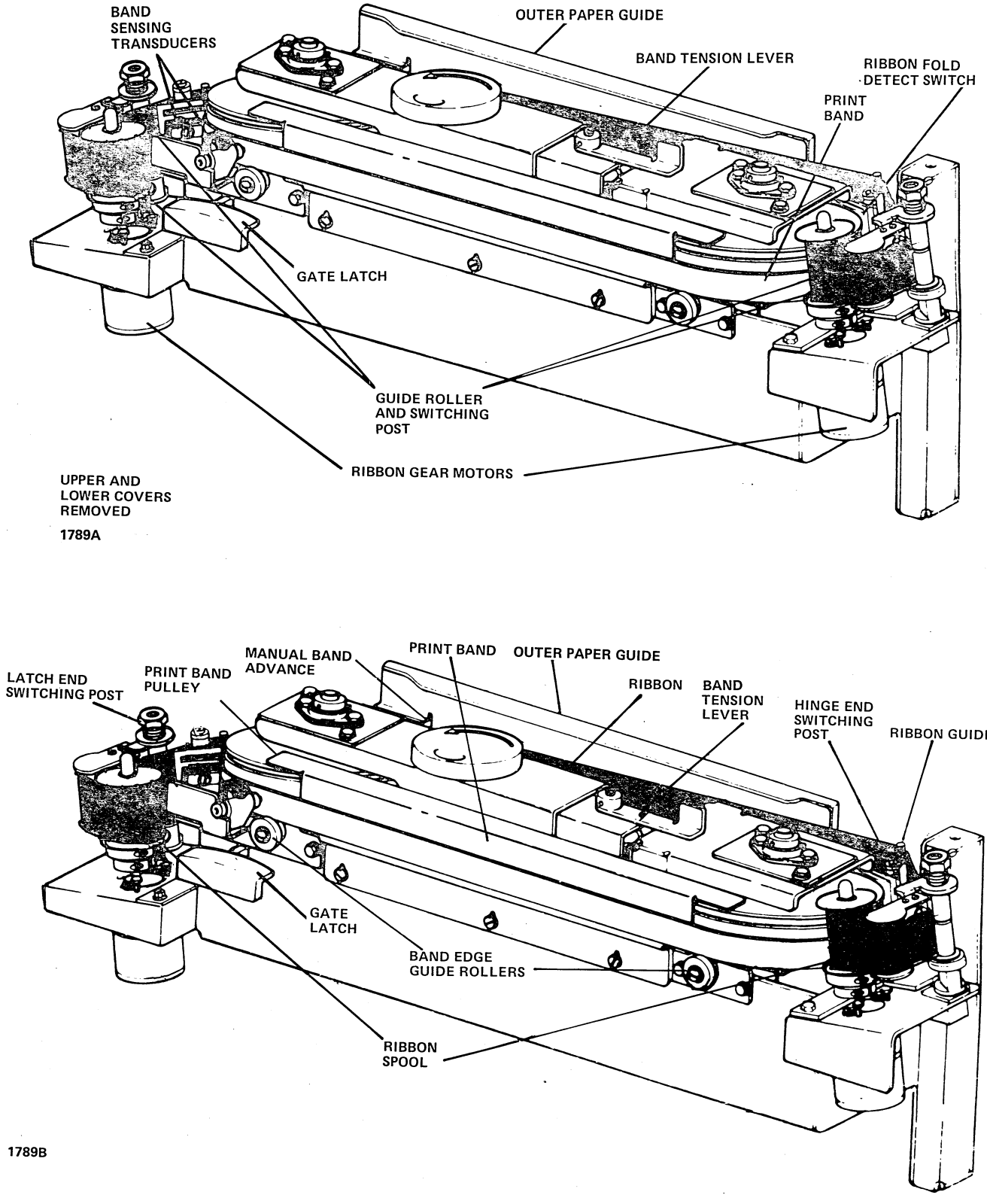

Figure 18-5. Print Gate Assembly and Ribbon Installation

RIBBON INSTALLATION

The ribbon employed in the printer is 48 yards (44 meters) long and 2 inches (50.8 centimeters) wide with a spool attached to each end. Care should be exercised when handling the ribbon to prevent permanent staining of clothing.

1. Place one ribbon spool on the latch end ribbon drive post (figure 18-6) so that the ribbon feeds off the inside edge of the spool. The ribbon spool may need to be rotated up to one-half turn before it engages the drive post.

2. Route the ribbon around the guide roller, through the fold detect sensors, and then between the ribbon shield and print band.

3. Route the ribbon through the ribbon guide, through the ribbon fold detect switch, and around the guide roller. Then place the spool on the hinge end drive post. The spool may need to be rotated up to one-half turn before it engages the drive post.

CAUTION

Observe that the ribbon reverse shorting foil is not visible anyplace along the ribbon route. If the foil is visible, wind enough ribbon around the empty spool to include and cover the foil. If the foil is forward of the switch post, the ribbon will be torn from the spool when the gate is closed.

NOTE

The ribbon slack is taken up by the ribbon motors when the gate is closed and the print band revolves.

4. Replace the print gate protective cover.

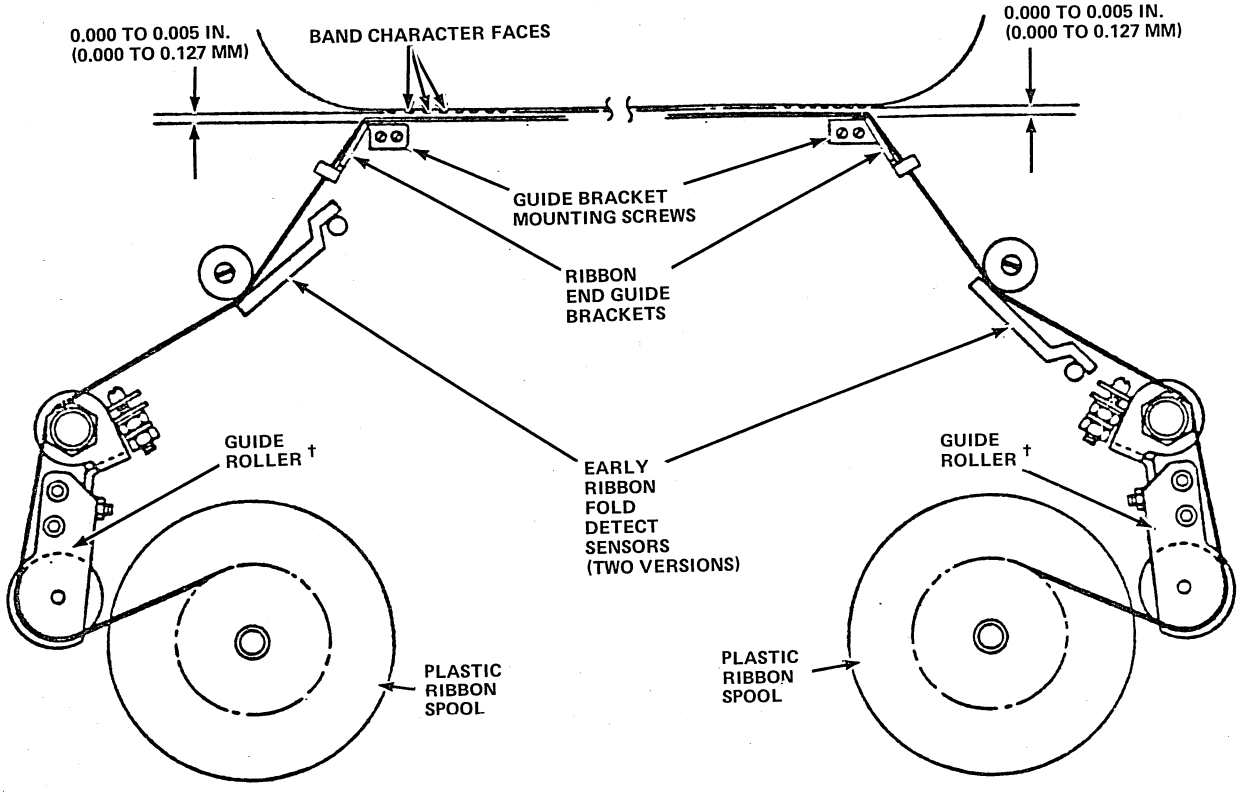

Figure 18-6. Ribbon System With Guide Rollers

FORMAT TAPE

Format Tape Punching Preparation

Format tapes must be punched only at 6 LPI. When a tape is to be punched for 8 LPI, the punch must be set to 6 LPI on automatic punches, or the 6 LPI format tape marks on the tape must be used for manual punches. Although the tape is punched at 6 LPI, when the printer's 6/8 LPI switch is in the 8 LPI position, the paper motion will be performed at eight lines per inch. When punching a format tape for 8 LPI, the 6 LPI marks must be counted between punches because the helf-inch indicator lines across the tape will not apply at 8 LPI.

The format tape length must equal the vertical length of the form in inches as counted by the 6 LPI marks on the tape. At 6 LPI, every six marks will equal an inch of form. At 8 LPI, every eight 6 LPI marks will equal an inch of form. On forms with a vertical length less than 11 inches (279mm), the format tape would be too short to go around the reader, so the tape must be made two or more times the vertical length of the form. Each length of form added to the format tape must be punched to conform with the first length or an error will be detected. The maximum length of tape that can be installed is 29.33 inches (745mm).

Tape Procedure

The format tape must be spliced to make a loop with a circumference between 11 and 29 inches (279-737mm). The length of the tape must be increased one or more form lengths for forms less than 11 inches (279mm).

1. Measure the length of the form in inches. Multiply the number of inches by six for 6 LPI, or eight for 8 LPI.

2. Count out the number in step 1 on the 6 LPI marks which are located on the channel 12 side of the format tape (44713800).

3. If a multiple length tape is being made, repeat the count for each length.

4. Check to be sure the 6 LPI marks have been counted and not the 8 LPI. Cut the tape at the point of final count with scissors.

5. Position the tape so the direction arrows point in a clockwise direction. Overlap the two tape ends by three 6 LPI marks placing the right hand edge over the left end. Draw a mark on the left side at the end of the overlap.

6. Use a thin coat of rubber cement (Duco cement or a similar pliable, non-brittle adhesive) on the top of the left edge of the tape as marked.

7. Allow the adhesive to air dry until tacky, then fold the right end of the tape over the adhesive and press.

8. Clean off excessive adhesive with Chlorothene-Nu or other suitable solvent. Keep in a well ventilated area.

9. Position the loop so the arrows are going to the right, the channel on the outside is one, the channel on the inside is twelve. Punch a top of page punch in channel 1 (or optional channel 8) at your selected line zero.

10. If your loop is a multiple of the form length, then count the 6 LPI marks to the left plus one more for the number of lines calculated in step 1. Count the punch as one when counting to the left for the next punch. Place the next top of form mark in channel 1 (or optional channel 8). Repeat for any additional multiples of the form length.

11. If the bottom of form channel is known, proceed to the next step, if it is not known, refer to table 18-1. Remove the bonnet and its ground strap, the pedestal rear cover and the paper bail. On the top of the 7PC6 board, and to the left, is a strip of dip switches numbered 1 to 8 from the bottom up. The three top switches determine the bottom of form channel. If switch 7 and 8 are open, the channel twelve is bottom of form. If 6 and 8 are open, then channel 8 is bottom of form. If 6 and 7 are open, channel 2 is bottom of form.

TABLE 18-1. BOTTOM OF FORM AND CHANNELS FOR PROGRAMMING

Equipment Number	Bottom of Form	Channels for Programming
CT103, CT105, CT106	Channel 2	3-12

12. Select the bottom form positioning remembering that with auto perf skip selected (7PC6 S2 closed), the forms will skip to channel 1 (or optional channel 8) when bottom of form is detected. Count off the 6 LPI marks on the bottom of forms channel and punch in the bottom of forms for each form length on the tape.

13. The other channels may be punched as required in any pattern of skips desired as long as each channel's pattern is repeated exactly for each form length multiple.

Format Tape Installation

1. Set the MAIN POWER circuit breaker to the down (off) position.

2. Install the format tape according to the instructions that appear on the cover of the format tape housing located below the vernier adjust housing (figure 18-3).

3. Set the MAIN POWER circuit breaker to the up (on) position. Observe that after a short time the red indicator on the front side of the format housing extinguishes. At this time, the format is loaded into the machine.

   If the light does not extinguish, press the pushbutton located immediately above the indicator. After two complete revolutions of the format tape loop, the light should extinguish; if not, refer to the applicable maintenance manual for assistance.

FORMS INSTALLATION

The printer accommodates margin perforated fan-fold forms, which are paper and card stock 4 to 16 inches (102 to 406 millimeters) wide and 8 to 14 inches (203 to 356 millimeters) long (fold to fold). The forms must have feed sprocket holes at center lines between 0.495 and 0.505 inch (12.57 and 12.83 millimeters) along each edge.

1. Open the left tractor flap, align the sprocket and holes, and close the tractor flap.

2. Unlock the tractor by turning the knob in the direction indicated. If the power is off, hold the coarse position control steady while unlocking.

3. Set the left tractor to obtain the desired left margin.

4. Open the right tractor flap, align the sprocket and holes, and close the tractor flap.

5. Unlock the right tractor and move to the right to obtain proper horizontal tension. The forms tension should be tight enough to remove any slack between tractors but tension should not cause elongation of the feed holes.

6. Activate the FORMS RELEASE switch (a slide switch located at the bottom edge of the control panel printed circuit board), figure 18-3, and turn the coarse position control to set the top-of-forms position. Line finder marks, corresponding to the hammer faces, are provided on the inner throat plate to aid in alignment. Set the top edge perforation adjacent to the area between these lines.

7. Use the vernier position control for fine alignment of top-of-form.

8. Close the print gate and press the FORMS FEED button. The forms move to the next page and are ready for printing.

Paper Basket Installation

Refer to the line printer equipment manual for proper paper basket installation.

PRINTING OPERATION CHECKOUT

1. Press the START/STOP button on the control panel. The START indicator should light and the STOP indicator should extinguish. If the START indicator does not light, check the following:

   a. Print gate not latched securely

   b. Print band not installed properly

   c. If neither condition exists, refer to the fault isolation section in the field service manual.

2. Press the START/STOP button. Remove the forms from the right tractor and press the FORMS FEED button. The FORMS FEED indicator should light to indicate a fault. Reinstall the forms into the left tractor and press the START/STOP button. The indicator should extinguish and the forms should advance one page.

3. Set the MAIN POWER circuit breaker to the down position.

SIGNAL CABLE INSTALLATION

To connect the line printer interface cable to the processor card reader/line printer controller or card reader/line printer/communication line adapter controller, perform the following steps.

1. Remove the side panels from the processor cabinet by pulling the bottom out to approximately a 45-degree angle and lift upward to detach it from the top hooks.

2. Pass the processor cable connector (Berg) end through the cable access box (figure 18-7) and connect it to the processor backplane connector or cable interface board at slot J or alternate slot. Refer to figure 18-7 for pin engagement detail of the CR/LP controller. Refer to section 21 if connecting a CR/LP/CLA cable interface board.

3. Using the U-bolt, attach the exposed cable shield area to the wall of the cable access box.

4. Route the cable to the back of the line printer and attach the connector to the data input connector (figure 18-7).

5. Replace the cable access box cover and side panels of the processor cabinet.

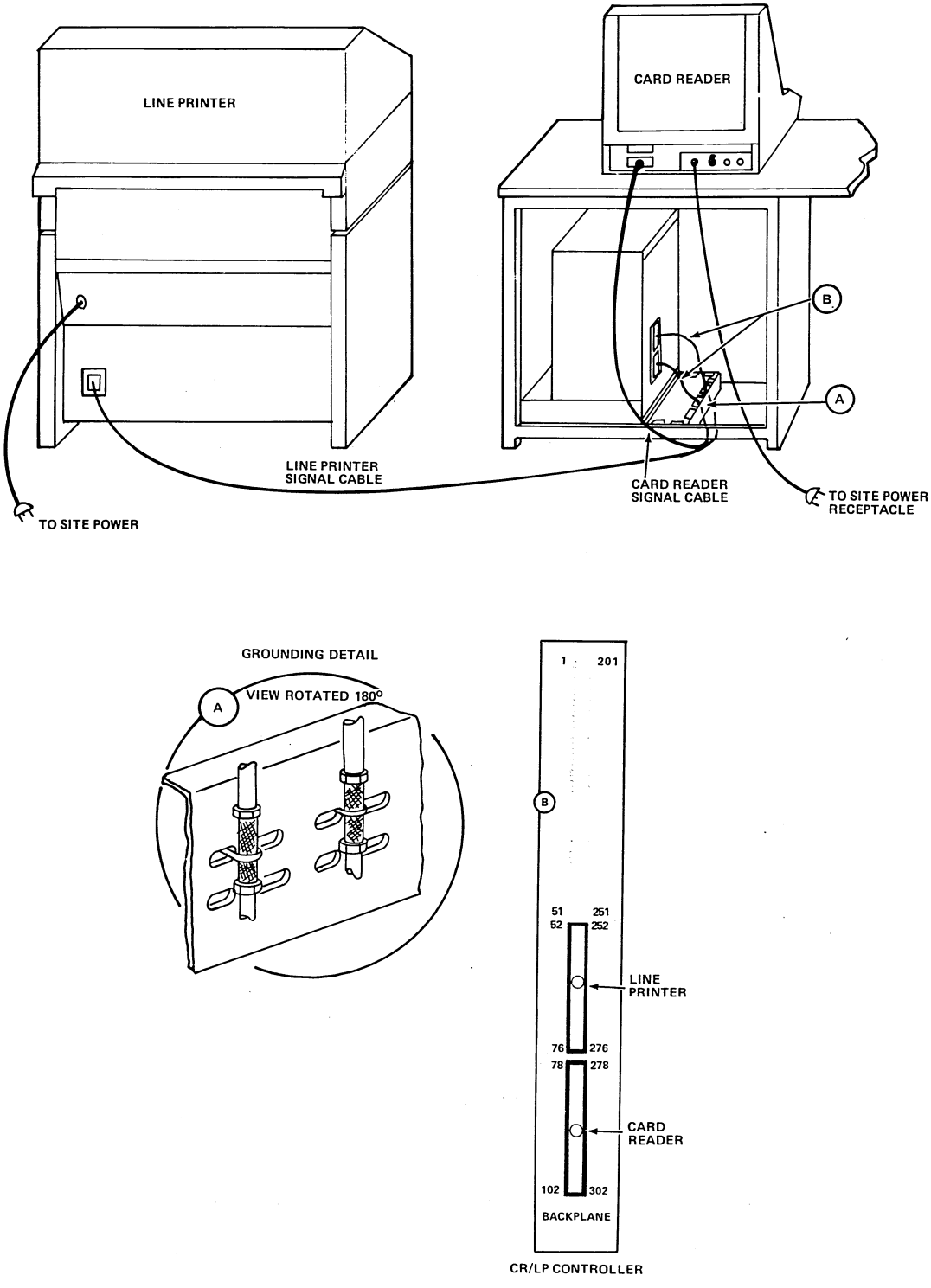

Figure 18-7. CYBER 18 Printer Signal and Power Cable Connections

SWITCH AND JUMPER SETTINGS

Switch and jumper settings must be verified at installation and any time PWAs containing switches or jumpers are replaced. Only the settings required for assemblies housed within the printer are described in this section. Refer to the applicable section of this manual for settings on the processor controller assemblies.

1. Remove the bonnet, paper shroud, and rear protective plate from the printer, if not already removed, to gain access to the logic rack.

NOTE

The switches may be marked ON/OFF or OPEN/CLOSED. ON is the same as CLOSED; OFF is the same as OPEN.

2. Remove the printer interface PWA, 7PC5, from the logic rack. Set the interface switches (figure 18-8) to the positions specified in figure 18-9. The table switch settings represent the standard factory settings for test operations. Before closing the printer cabinet, ask the customer about his particular needs and set the switches accordingly (if other than standard). Reinstall the PWA in the logic rack.

3. Remove PWA 7PC1 from the logic rack. Set the segments of switch SW1 to the positions specified in figure 18-9. Reinstall the PWA in the logic rack.

4. Remove PWA 7PC6 from the logic rack. Set the segments of switch SW1 to the positions specified in figure 18-9. Reinstall the PWA in the logic rack.

5. Replace the rear protective plate, paper shroud, bonnet and all other panels removed during the installation.

DIAGNOSTIC TESTING

Perform the manual operating and diagnostic checks in the diagnostic decision logic tables in the band line printer subsystem hardware maintenance manual.

NOTE

The diagnostic tests and routines described in the line printer subsystem hardware maintenance manual can only be performed after the console display, processor, and flexible disk drive or tape cassette (diagnostic load device) installations are complete.

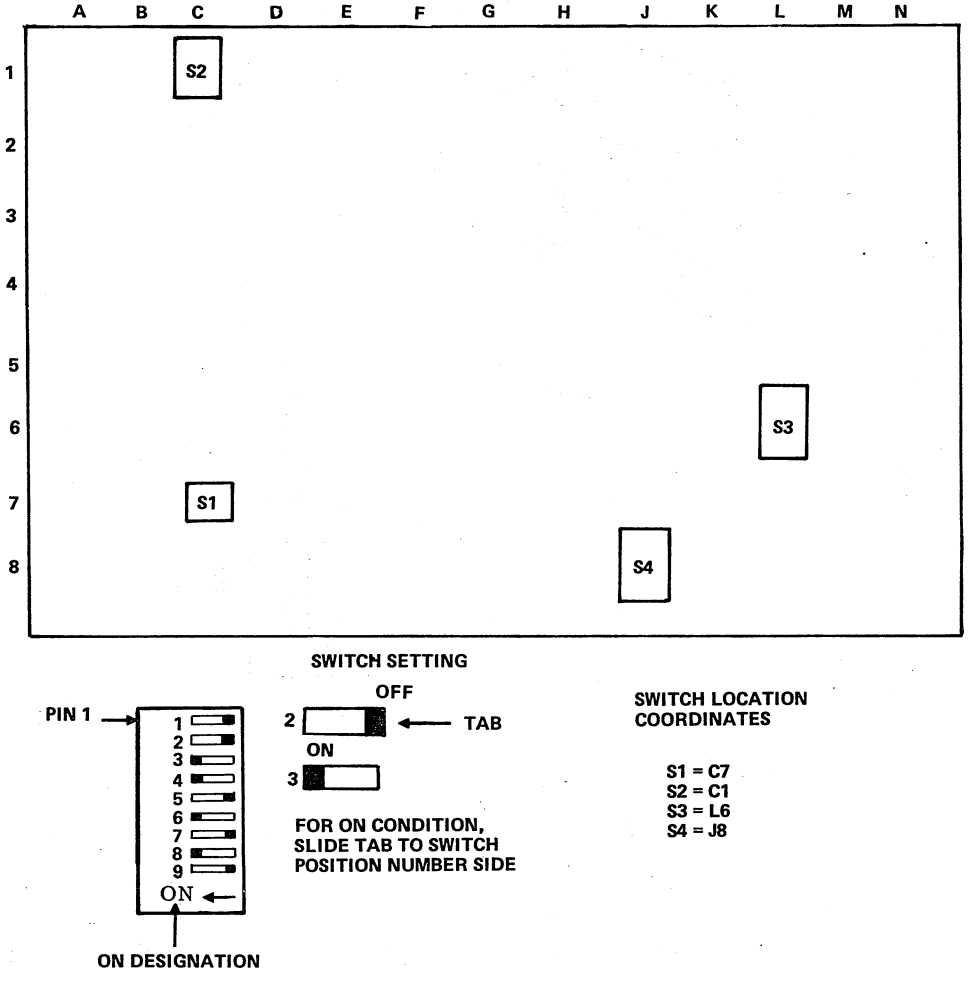

Figure 18-8. Printer Interface Switch Locations

ASSEMBLY NUMBER DIP SWITCH POSITIONS
LOCATION 7PC5 (CDC INTERFACE PWA)

SWITCH NO.	ON	OFF	
SWN1-1	X		ON SELECTS BUFFER CLEAR OPTION
SWN1-2	X		ON SELECTS ODD PARITY
SWN1-3		X	ON SELECTS EVEN PARITY
SWN1-4	X		ON SELECTS 7 DATA BIT I/O
SWN2-1		X	OFF WITH CONTROL PANEL TEST PRINT SWITCH
SWN2-2		X	ON FOR BAND DETECT STATUS
SWN2-3		X	ON FOR BAND DETECT STATUS
SWN2-4		X	ON FOR COMPRESSED PITCH STATUS
SWN2-5		X	ON FOR BUFFER OVERFLOW STATUS
SWN2-6	X		ON FOR OUT OF PAPER STATUS
SWN2-7		X	ON FOR DATA SEQUENCE OPTION
SWN2-8	X		ON FOR CHARACTER REQUEST/DATA STROBE, OFF - INFORMATION READY
SWN2-9		X	OFF WITH CONTROL PANEL SINGLE SPACE SWITCH
SWN3-1	X		ON FOR USING EVFU CHANNELS (4 CHANNEL STANDARD)
SWN3-2	X		LINE COUNTER - OFF FOR 2 OR 4 BIT, ON FOR 6 BIT
SWN3-3	X		ON FOR 12 EVFU CHANNELS
SWN3-4	X		ON FOR 8 OR 12 EVFU CHANNELS
SWN3-5	X		LINE COUNTER - OFF FOR 2 BIT, ON FOR 4 OR 6 BIT
SWN3-6		X	ON - POSTPRINT, OFF - PREPRINT (CHECK PROGRAM)
SWN3-7		X	ON FOR NO EVFU CHANNELS
SWN3-8		X	ON TO ENABLE COMPRESSED PITCH OPTION
SWN-3-9		X (136)	PRINTED LINE COLUMNS, OFF FOR 136-COLUMN STANDARD.
SWN4-1	X		BIT 1
SWN4-2		X	BIT 2
SWN4-3	X		BIT 3
SWN4-4	X		BIT 4
SWN4-5		X	BIT 5
SWN4-6		X	BIT 6
SWN4-7	X		BIT 7

TEST MODE CHARACTER PRINTED (ASCII M)

LOCATION 7PC1 (INPUT PRINT PWA)

SWITCH NO.	ON	OFF	
SWN3-1	900	300/600	PRINTER SPEED SELECTION
SWN3-2	300	600/900	
SWN3-3	300/900	600	

LOCATION 7PC6 (EVFU PWA)

SWITCH NO.	ON	OFF	
SWN1-1		X	ON FOR I/O LOAD MODE
SWN1-2		X	ON REMOVES AUTO PERF SKIP OPTION
SWN1-3		X	INTERNAL EVFU TEST PROGRAM SPACING - ON (6 LINES/INCH), OFF (8 LINES/INCH)
SWN1-4		X	ON FOR I/O EVFU LOAD ERROR DETECTION
SWN1-5	X		ON FOR TAPE READER OR I/O LOAD MODE
SWN1-6		X	ON FOR 12 BOTTOM-OF-FORM CHANNEL
SWN1-7		X	ON FOR 8 BOTTOM-OF-FORM CHANNEL
SWN1-8	X		ON FOR 2 BOTTOM-OF-FORM CHANNEL

NOTE: DIP SWITCHES MAY BE MARKED ON/OFF OR OPEN/CLOSED.

ON - CLOSED
OFF - OPEN

1456A-2

Figure 18-9. Band Printer Switch Settings

The eight-channel communication line adapter is a one-board device that is inserted into an assigned A/Q board slot in the processor. Refer to section 1 for specific locations.

PARTS AND EQUIPMENT

Parts and Equipment	Equipment Number	Part Number
Eight-channel communication line adapter	FJ442-A	96752122
Cable assembly, processor to console display, 50 feet (15.2 meters)	--	96750282 or 88951570 or 88952427†
Cable assembly, processor to modem or card punch, 50 feet (15.2 meters)	--	96750283 or 88951575
Cable assembly, processor to matrix printer, 50 feet (15.2 meters)	--	96750284 or 96752351 or 88951580
Cable interface board	--	96754573
Loop-back test cable	--	96750678
Signal cable, customer-supplied (optional)††	--	--

TOOLS AND TEST EQUIPMENT

Installation of the eight-channel communication line adapter requires the following tools if the customer intends to build and supply the required signal cables described under Customer-Built Signal Cables below.

- Iron, soldering, 25 watts, 1/16-inch tip
- Iron, soldering, 45 watts, 1/4-inch tip
- Heat gun, shrink sleeving

UNCRATING

The eight-channel communication line adapter printed circuit board and its supplied signal cable are individually wrapped in a plastic bag and shipped in the same heavy-duty cardboard carton, buffered from shock and/or impact damage by an industrial filler. Optional signal cables are normally shipped as separate items. No special instructions are required to remove the communication line adapter and signal cables from their containers.

CRATING

Refer to the uncrating instructions above for crating the eight-channel communication line adapter and its associated signal cable assemblies.

INSPECTION

Inspect the eight-channel communication line adapter and signal cable assemblies as follows:

1. Remove the printed circuit board and cable assemblies from their shipping container and plastic bags.
2. Inspect the board and its components for physical damage.
3. Inspect the cable assemblies for loose wires and physical damage.

POWER REQUIREMENTS

The eight-channel communication line adapter receives all necessary power from the processor power supply via prewired connections to the communication-line-adapter-assigned backplane connections. The slot position assigned to the eight-channel communication line adapter is a function of the system application, and no additional power wiring is required at the site.

SIGNAL CABLING

The eight-channel communication line adapter is supplied with a single loop-back test cable. To accommodate additional peripherals, additional signal cable assemblies that must be ordered separately are available. Refer to the Parts and Equipment section for available signal cable assemblies.

SIGNAL CABLE INSTALLATION

To complete installation of the signal cables, proceed as follows. Refer to figure 19-1.

1. Connect the cable adapter to the processor backplane. Refer to section 1 for assigned slot positions. Observe the starting and ending pin numbers on the cable adapter and ensure that the adapter is inserted over these pins on the backplane. Secure the cable adapter to the backplane.

†FCC EMI qualified part. Use of non-qualified parts on FCC EMI verified systems will void the system verification. Refer to section 1, FCC EMI Verification, for details concerning identification and continuation of this verification.

††For information on customer fabricated cable assemblies, refer to the CYBER 18 Site Planning Kit listed in the preface.

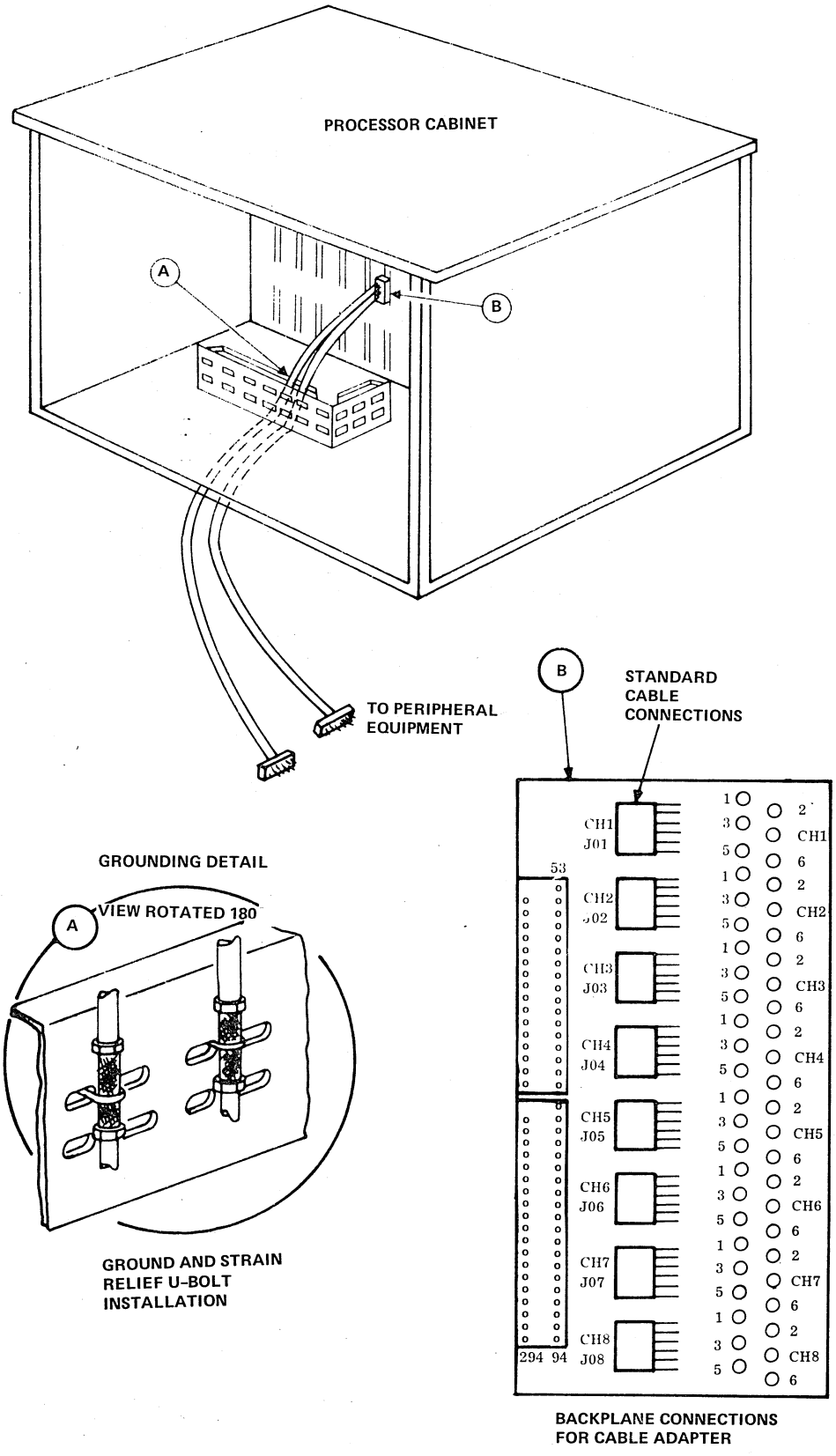

Figure 19-1. CYBER 18 Eight-Channel Communication Line Adapter Signal Cable Installation

2. Connect the signal cable to the cable adapter by plugging the cable connector into the desired channel socket (refer to figure 19-1).

3. Attach the signal cable shield to the processor cabinet at the bottom entry point. The necessary U-bolts are included with the cable assembly. More than one cable may occupy each U-bolt.

4. Route the signal cable out of the cabinet through the bottom cable access point and along the floor to the rear of the cabinet.
5. Continue routing the signal cable to its assigned peripheral and secure the cable to the peripheral connector.

SWITCH/JUMPER VERIFICATION

The component side of the eight-channel communication line adapter printed circuit board contains 15 switches used to configure the board for various functions and applications. Prior to installation of the board into the processor, the position of these switches must be verified. Figure 19-2 illustrates the location of the 15 switches on the board.

EQUIPMENT CODE SELECT

The equipment code select switch (S1) configures the eight-channel communication line adapter for address identification to the Q register. Refer to table 19-1 for the proper switch configuration.

UNIT SELECT

The unit select switch (S2) selects which one of a two-board group is to be selected. Table 19-2 reflects the normal position of the unit select switch.

PROGRAM PROTECT

Set the program protect switch (S3) to OFF for protected operation and ON for the unprotected option. The normal switch position is ON or unprotected.

TIMER INTERRUPT SELECT

The timer interrupt select switch (S4) settings are given in table 19-3. This switch setting selects timer interrupts dependent upon the baud rates to be selected by S6 and S7. Divide-by-four or divide-by-eight selections are provided to accommodate different character word lengths. These switches are set according to system application.

AUXILIARY BAUD RATE SELECT

Table 19-4 lists the auxiliary baud rate select switch (S5) settings. This switch selects a communication rate dependent upon the position of the baud rate select switch position.

BAUD RATE SELECT

The normal positions for the baud rate select switches (S6 and S7) are listed in table 19-5. Set these two switches as required for the particular site.

CHANNEL FUNCTION SELECT

The channel function select switches (S8 through S15) must be set to accommodate the communication mode for each of the eight operational channels. Full duplex is the normal system operating mode. The switch positions required to obtain full duplex compatibility for channel 1 are listed in table 19-6. Table 19-7 lists the switch assignments for each of the eight operational channels. Switch S11 is set for half duplex when connected to a matrix printer. Table 19-8 lists the S3 switch positions.

BACKPLANE WIRING

The following backplane wires must be verified or added at the selected eight-channel communication line adapter card slot. Refer to section 1 for correct slot location.

Communication Line Adapter Slot Location	Status Mode Interrupt Location	Termm Identification
249	L74	RPINT (program/ macro interrupt)
250	L229	RDINT (data macro interrupt)

NOTE

Multiple eight-channel subsystems may be installed in one of three ways: in unique eight-channel subsystems that have unique equipment codes and individual interrupt lines, in 16-channel subsystems that share the same equipment code (but have unique unit codes) and interrupt line, and in a combination of the preceding two ways. When two eight-channel communication line adapters share the same equipment code (16 channels), an interrupt jumper must be installed on the backplane between the interrupt pins (each numbered 249) of the card slots occupied by the two common adapters.

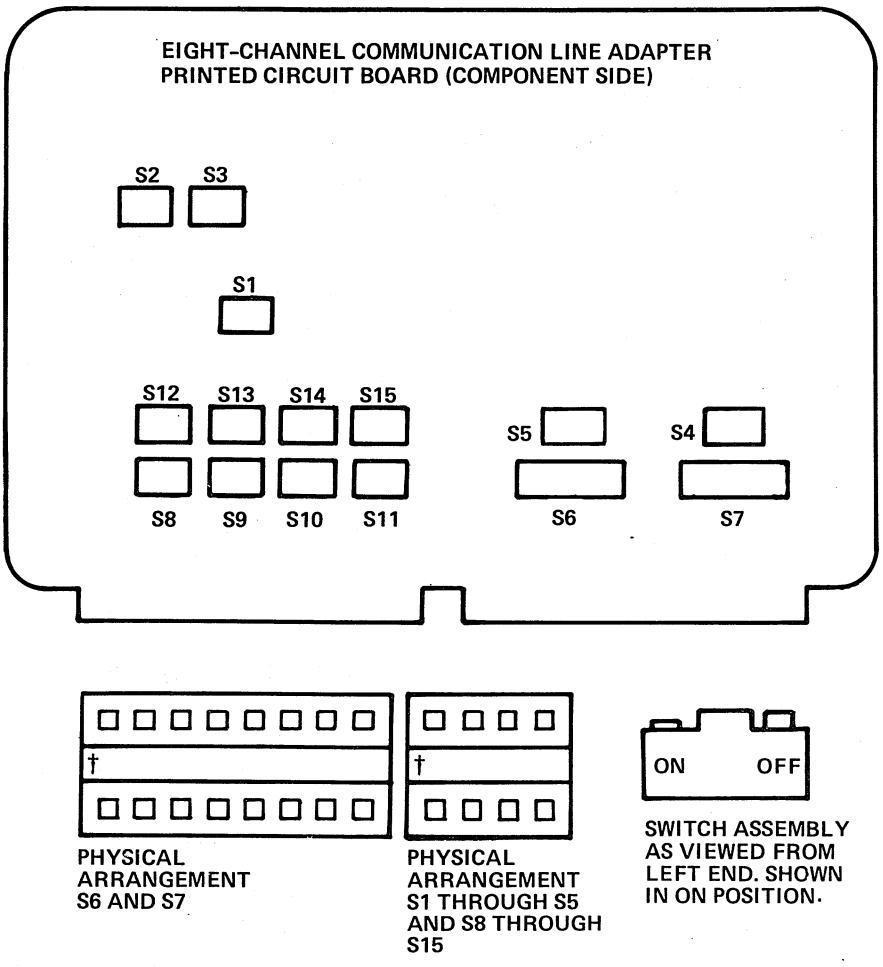

† THE MARK ON THE SWITCH INDICATES SWITCH NUMBER 1 OF THE GROUP AND IS LOCATED AT THE ON SIDE OF THE ASSEMBLY.

0698-1

Figure 19-2. Controller Board Switch Locations

TABLE 19-1. EQUIPMENT CODE SELECT SWITCH SETTINGS (S1)

S1-1 Q7	S1-2 Q8	S1-3 Q9	S1-4 Q10	Equipment Code
On	Off	Off	Off	1
Off	On	Off	Off	2
On	On	Off	Off	3
Off	Off	On	Off	4
On	Off	On	Off	5
Off	On	On	Off	6
On	On	On	Off	7
Off	Off	Off	On	8
On	Off	Off	On	9
Off	On	Off	On	A †
On	On	Off	On	B
Off	Off	On	On	C
On	Off	On	On	D
Off	On	On	On	E
On	On	On	On	F

† Normal switch positions

TABLE 19-2. UNIT SELECT SWITCH SETTINGS (S2)

S2 Switch Positions		Function
S2-1	S2-2	
On	Off	Unit 1 selected †
Off	On	Unit 2 selected
S2-3		Must be on
S2-4		Must be off

† Normal switch positions

TABLE 19-3. TIMER INTERRUPT SELECT SWITCH SETTINGS (S4)

Switch	Settings	Function
S4-1	On †	Selects the timer interrupt from baud rate selected at S6 (see table 19-5)
S4-2	Off †	
S4-1	Off	Selects the timer interrupt from baud rate selected at S7 (see table 19-5)
S4-2	On	
S4-3	On	Selects divide-by-4 of selected baud rate
S4-4	Off	
S4-3	Off †	Selects divide-by-8 of selected baud rate
S4-4	On †	

† Normal switch positions

TABLE 19-4. AUXILIARY BAUD RATE SELECT SWITCH SETTINGS (S5)

Switch	Setting	Function
S5-1	On	Selects the communications rate of 4800 baud when S6 and/or S7 are in the auxiliary position. (See table 19-5.)
S5-2	Off	
S5-3	Off	
S5-4	Off	
S5-1	Off	Selects the communications rate of 2400 baud when S6 and/or S7 are in the auxiliary position. (See table 19-5.)
S5-2	On †	
S5-3	Off	
S5-4	Off	
S5-1	Off	Selects the communications rate determined by an EXT CLK input to board pin 99 for S6 and/or S7 when in the auxiliary position. (See table 19-5.)
S5-2	Off	
S5-3	On	
S5-4	Off	

† Normal switch positions

TABLE 19-5. BAUD RATE SELECT SWITCH SETTINGS (S6 AND S7)

S6								
1	2	3	4	5	6	7	8	Baud Rate (Channels 1 Through 4)
On	X	X	X	X	X	X	X	9600†
X	On	X	X	X	X	X	X	1200
X	X	On	X	X	X	X	X	600
X	X	X	On	X	X	X	X	300
X	X	X	X	On	X	X	X	150
X	X	X	X	X	On	X	X	110
X	X	X	X	X	X	On	X	75
X	X	X	X	X	X	X	On	Auxiliary††
S7								
1	2	3	4	5	6	7	8	Baud Rate (Channels 5 Through 8)
On	X	X	X	X	X	X	X	9600†
X	On	X	X	X	X	X	X	1200
X	X	On	X	X	X	X	X	600
X	X	X	On	X	X	X	X	300
X	X	X	X	On	X	X	X	150
X	X	X	X	X	On	X	X	110
X	X	X	X	X	X	On	X	75
X	X	X	X	X	X	X	On	Auxiliary††

†Normal switch positions (ITOS 1.2 and subsequent versions)
††Normal switch positions (ITOS 1.1)
X = Off position

TABLE 19-6. CHANNEL FUNCTION SELECT SWITCH SETTINGS (S8)

Channel 1	
Switch Setting	RS232 Mode of Communication
S8-1 On S8-2 Off S8-3 Off S8-4 Off	Half duplex††
S8-1 Off S8-2 On S8-3 On S8-4 Off	Full duplex†

†Normal switch positions

††Normal switch position for matrix printer channel

TABLE 19-7. CHANNEL FUNCTION SELECT SWITCH ASSIGNMENTS (S8 THROUGH S15)

Channel	Switch
1	S8
2	S9
3	S10
4	S11
5	S12
6	S13
7	S14
8	S15

TABLE 19-8. PROTECT SWITCH S3

Switch Settings	Function
S3-1 ON	Unprotected mode †
S3-1 OFF	Protected mode ††
S3-2, 3 and 4	Not used

†Normal Switch Settings (Non-ITOS)
††Normal Switch Settings (ITOS)

ADAPTER INSTALLATION

CAUTION

Do not insert the communication line adapter board into an A/Q-DMA slot since this will damage the board.

After all switch positions have been determined and properly selected, insert the eight-channel communication line adapter into its assigned card slot of the processor. Insert the board vertically, edge pins first, with the component side facing left until the edge pins make contact with the chassis backplane connector. Ensuring that the board is not cross-slotted, apply firm thumb pressure at the upper and lower corners of the board until the edge pins are securely inserted into the backplane connector. The outside edge of the board should be even with the other processor boards.

DIAGNOSTIC TESTING

Perform the manual operating and diagnostic checks according to the diagnostic decision logic talbles (DDLTs) and test routines in the Terminal Equipment Subsystem Field Repair Guide.

Any two of the eight channels can communicate with each other by using the loop-back diagnostic cable. This cable effectively eliminates the need for a peripheral device when testing the eight-channel communication line adapter.

NOTE

The diagnostic tests and routines described in the system hardware maintenance manual can only be performed after the console display, processor, and card reader or flexible disk drive (diagnostic load device) installations are complete.

This section provides information to assist persons responsible for installing and/or verifying equipment interrupt configurations and assigning equipment numbers for systems that utilize CYBER 18-5M/10M/20/25/30 MOS processors.

TABLE CONTENTS AND PREPARATION

The following tables provide interrupt and equipment number assignment information and interrupt type, origin, and destination information necessary to complete the form in figure 20-1 and to accomplish the backplane interrupt connections.

Table 20-1 lists the processor card slots and their types, along with the standard controller slot assignments. For each card slot position, there is a list of equipments that have been assigned to that card slot. These assignments are for convenience only and may be interchanged to fit specific configurations. The first device listed represents the primary slot assignment. The second and subsequent devices listed represent alternate assignments. In system configurations with multiple devices or where configuration conflicts exist, it is necessary to rearrange slot assignments accordingly. See section 1 for locating alternate slot assignments and restrictions.

Table 20-2 shows the standard equipment and interrupt numbers that have been assigned to the various CYBER 18 peripheral products. When multiple equipments, specific configurations, or software requirements create equipment or interrupt number conflicts, the installation or maintaining personnel must make the changes and log them accordingly. All equipment numbers are selected on the individual controller or interface printed wiring assemblies. Refer to the appropriate section of this manual for the specific details of selecting equipment numbers on the various peripherals. Table 20-2 also shows the micro/macrointerrupt output pin assignments for each of the controllers or interfaces.

Table 20-3 shows the standard prewired interrupt configuration for the AA132-A, AA133-A, and AA134-A backplanes. These may be changed to meet specific system requirements.

Figure 20-2 is an example of a system equipment/interrupt assignment table that has been filled out to reflect a specific system.

TABLE 20-1. STANDARD CONTROLLER SLOT ASSIGNMENTS

Slot	Type	Deadstart Capability		Controller Type †
		Equipment Model		
		A	B, C, and D	
J	A/Q	Yes	Yes	CR/LP/, CR/LP/CLA
H	A/Q-DMA	No	No	Module drive, CDD
G	A/Q-DMA	No	No	LCTT (Dual mode)
F	A/Q	No	No	1 by 8 CLA, DCCLA
E	A/Q	Yes	Yes	FDD, Tape cassette
D	A/Q-DMA	No	Yes	SDLC CLA, BCLA, FDD
C	A/Q	No	Yes	Restart loader, BCLA expansion
B	Open	No	No	BCLA Expansion
A	A/Q-DMA	Yes	No	BCLA, SDLC CLA, DMA expansion
AA	A/Q	No	No	PTR/PTP, A/Q expansion, DCCLA
AB	SET/SAM	No	No	LCTT (NRZI)

†The first device listed represents the primary slot assignment. The second and subsequent devices listed represent alternate assignments. In system configurations with multiple devices or where configuration conflicts exist, see section 1 for alternate choices.

PROJECT: _____ PROCESSOR TYPE: _____ SITE NUMBER: _____

1. This form provides specific equipment and interrupt number assignment information for the above system.
2. The backplane interrupt wiring for the above equipment is shown in the Backplane Interrupt Pin Assignment column.
3. Equipment numbers as shown have been selected on respective peripheral controllers/interfaces.
4. Keep this form updated. Log all equipment and/or interrupt number changes that occur to the above system processor.

Product Number	Equipment Number	Description	Slot Assignment	Slot Type	Equipment Number	Interrupt Number	Interrupt Type	Backplane Interrupt Pin Assignment	
								Card Slot Origin	Destination
		CR	J	A/Q			MACRO		
							MICRO		
		LP					MACRO		
							MICRO		
		CLA					MACRO		
							MICRO		
			H	A/Q-DMA			MACRO		
							MICRO		
			G	A/Q-DMA			MACRO		
							MICRO		
			F	A/Q			MACRO		
							MICRO		
			E	A/Q			MACRO		
							MICRO		
			D	A/Q-DMA			MACRO		
							MICRO		
			C	A/Q			MACRO		
							MICRO		
			B	OPEN			MACRO		
							MICRO		
			A	A/Q-DMA			MACRO		
							MICRO		
			AA	A/Q			MACRO		
							MICRO		
							MACRO		
							MICRO		
			AB	SET/ SAM			MACRO		
							MICRO		

†SLOT B IS NORMALLY UNWIRED AND NOT USED; IT IS RESERVED FOR FUTURE SYSTEM EXPANSION.

1401

Figure 20-1. Field Print Package Equipment/Interrupt Number Assignment Form

TABLE 20-2. RECOMMENDED EQUIPMENT AND INTERRUPT NUMBER ASSIGNMENTS

Peripheral Controller/Interface	Equipment Number†	Standard Interrupt Assignment†		Controller Backplane Interrupt Pin Assignment†	
		Macro	Micro	Macro	Micro
Card reader/line printer (CR)	11†	11††	11††	49	50
communication line (LP)	4	4††	4††	249	250
adapter (CLA)	10	10	10	77	277
Card reader/line printer (CR)	11	11††	11††	49	50
(LP)	4	4††	4††	249	250
Cassette	7	7††	7††	249	250
Flexible disk drive (FDD) (A/Q)	7	7††	Not used	249	Not used
(A/Q-DMA)	13	13††	Not used	249	Not used
Module drive	14	14††	Not used	249	Not used
Dual-channel communication line adapter (DCCLA)	10	10††	10	249	250
Buffered communication line adapter (BCLA)	10	10††	10	249	250
Synchronous data link control communication line adapter (SDLC CLA)	10	10	Not used	249	Not used
Magnetic tape transport controller (NRZI)	9	9††	9††/0††	249	250
Magnetic tape transport controller (dual mode)	12	12	Not used	249	Not used
Cartridge disk drive	14	14††	Not used	249	Not used
Eight-channel communication line adapter	10	10††	Not used	249	250
Restart loader	6	6	Not used	249	Not used
Paper tape reader/paper tape punch	2	2††	2††	249	250
CYBER 18/1500 Series adapter†††	2	2††	Not used	49	Not used
	3	3	Not used	249	Not used
A/Q expansion		Not assigned		249	250
DMA expansion		Not assigned		249	250

† Interrupt and equipment numbers are dependent on the software being run. Refer to the appropriate applications manual, or contact your Control Data representative for a copy of the software ordering bulletin.

†† These interrupts are prewired in AA133-A, AA132-A, and AA134-A processor backplanes.

††† The CYBER 18/1500 Series adapter cannot be installed in card slots that have deadstart capability.

This adapter is capable of providing up to eight interrupts that may be routed to the SMI board. Refer to the CYBER 18/1500 Series Adapter Hardware Reference/Maintenance Manual for additional pin assignments.

TABLE 20-3. STANDARD INTERRUPT WIRING ASSIGNMENTS

Interrupt Number	Backplane Pin Assignment for Macro Interrupt			Backplane Pin Assignment for Micro Interrupt		
	Term Name	SMI Pin Assignment	Controller/ Interface Pin Assignment	Term Name	SMI Pin Assignment	Controller/ Interface Pin Assignment
0	RPINT16/	L-69†	R-277†	Not used	L227†	L230†
1	RPINT17/	L-269†	K-58†	RDINT01/	L-27†	K-242†
2	RPINT18/	L-270	AA-49	RDINT02/	L-32	AA-50
3	RPINT19/	L-70		RDINT03/	L-232	
4	RPINT20/	L-72	J-249	RDINT04/	L-28	J-250
5	RPINT21/	L-272†	K-75†	RDINT05/	L-31	
6	RPINT22/	L-271		RDINT06/	L-231	
7	RPINT23/	L-71	E-249	RDINT07/	L-228	E-250
8	RPINT24/	L-73†	K-285†	RDINT08/	L-30†	K-86†
9	RPINT25/	L-274	AB-249	RDINT09/	L-230	AB-250
10	RPINT26/	L-74	F-249	RDINT10/	L-229	F-250
11	RPINT27/	L-273	J-49	RDINT11/	L-29	J-50
12	RPINT28/	L-277	AB-49	RDINT12/	L-33†	K-85†
13	RPINT29/	L-276	D-249	RDINT13/	L-226†	K-272†
14	RPINT30/	L-77	H-249	RDINT14/	L-233†	U-99†
15	RPINT31/	L-275	A-49	RDINT15/	L-234†	L-288 L-279 U-54†

†These pin assignments cannot be used for interrupts on the MOS processor when it is used in the 1700 emulation mode. They are utilized for internal CPU functions.

INTERRUPT WIRING INSTALLATION PROCEDURES

Two different procedures are required for installing interrupt wiring on the processor, due to differences in the backplane configuration.

The interrupts on the AA132-A, AA133-A, and AA134-A processor backplanes are hardwired. When it is necessary to change these interrupts, wires must be removed or added between the various controller board slots and the assigned interrupt pin on the status mode interface (SMI) board slot (L).

The interrupts on the AA132-B/C/D, AA133-B/C, AA134-B, AA145-A, and AA153-A processor backplanes are not prewired. Two cable assemblies (part number 96751130 for microinterrupts and part number 96751131 for macrointerrupts) are supplied with each processor.

Each cable assembly consists of a large connector on one end that fits over the designated pins on the backplane at the SMI board slot (L) and several single-conductor connectors on the other end that connect to the respective controller board slot interrupt output pins.

To modify the interrupt wiring, proceed as follows:

1. Determine which interrupts have to be changed. Utilize the data provided in tables 20-1 through 20-3 to fill in the form in figure 20-1. The form will then reflect the desired interrupt configuration for the system.

PROJECT: SAMPLE SYSTEM PROCESSOR TYPE: AA132-A SITE NUMBER: XX01

1. This form provides specific equipment and interrupt number assignment information for the above system.
2. The backplane interrupt wiring for the above equipment is shown in the Backplane Interrupt Pin Assignment column.
3. Equipment numbers as shown have been selected on respective peripheral controllers/interfaces.
4. Keep this form updated. Log all equipment and/or interrupt number changes that occur to the above system processor.

Product Number	Equipment Number	Description	Slot Assignment	Slot Type	Equipment Number	Interrupt Number	Interrupt Type	Backplane Interrupt Pin Assignment	
								Card Slot Origin	Destination
		CR	J	A/Q	11	11	MACRO	J-49	L-273
							MICRO	J-50	L-29
1828-1	FH301-A	CR/LP CONT'L LP			4	4	MACRO	J-249	L-72
							MICRO	J-250	L-28
		CLA			—	—	MACRO	—	—
							MICRO	—	—
1833-4	FA111-A	CDD CONT'L	H	A/Q-DMA	14	14	MACRO	H-249	L-77
							MICRO	N.U.	N.U.
1860-5	FA464	D.M. LCTT CONT'L	G	A/Q-DMA	12	12	MACRO	G-249	L-277
							MICRO	N.U.	N.U.
			F	A/Q			MACRO		
							MICRO		
PART OF 18-20		FLEX DISK DRIVE CONT'L (FDD)	E	A/Q	7	7	MACRO	E-249	L-71
							MICRO	N.U.	N.U.
			D	A/Q-DMA			MACRO		
							MICRO		
1843-1	FJ441-A	2-CHN CLA	~~AA~~ C	A/Q	2	2	MACRO	AA-249	L-270
							MICRO	AA-250	L-32
			B	OPEN			MACRO		
							MICRO		
			A	A/Q-DMA			MACRO		
							MICRO		
1828-1	FH301-A	CR/LP CONT'L CR	~~AA~~ C	A/Q	6	6	MACRO	C-49	L-271
							MICRO	C-50	L-231
		LP			3	3	MACRO	C-249	L-70
							MICRO	C-250	L-232
			AB	SET/ SAM			MACRO		
							MICRO		

†SLOT B IS NORMALLY UNWIRED AND NOT USED; IT IS RESERVED FOR FUTURE SYSTEM EXPANSION.

1401-1

Figure 20-2. Sample Equipment/Interrupt Number Assignment Form

2. Remove the necessary panels and covers from the processor to expose the processor backplane.

3. a. For the AA132-A, AA133-A, and AA134-A backplanes - Using a wire unwrap tool (part number 12259183) or wire wrap tool (part number 12263210), remove and/or add wires as necessary. Wire utilized for wire additions should be AWG-30, solid conductor, Teflon insulated.

   b. For the AA132-B/C/D, AA133-B/C, AA134-B, AA145-A, and AA153-A backplanes - Install the large connectors of the micro- and macrointerrupt cable assemblies on slot L of the backplane to cover pins L25/225 through L36/236 and L69/269 through L80/280 respectively. Install the appropriate single-conductor connectors (black wires for microinterrupts and white wires for macrointerrupts with all wires labeled INTxx) on the interrupt output pins of the repective controller board slots according to the information in table 20-3.

NOTE

Some controller cables or paddle boards cover the interrupt output pins. For these configurations, the cable or paddle board provides an extension to the backplane output pins to accommodate the interrupt jumpers.

4. Upon completion of the reconfiguration, verify that the connections are secure and entered in figure 20-1.

5. Replace all covers and panels removed in step 2.

6. Perform the appropriate diagnostic routines for the controllers with the new interrupt numbers entered in the test parameter setup. Refer to the operational diagnostic system reference manual for details on changing test parameters.

The card reader/line printer/communication line adapter controller (CR/LP/CLA) is a combination one-board controller that controls a card reader, a line printer and one communication channel. The board contains plug-in wire jumpers for selecting controller parameters. There are individual interface signal cables to connect the card reader, line printer, and communication line to the processor.

PARTS AND EQUIPMENT

Parts and Equipment	Equipment Number	Part Number
Card reader/line printer/ communication line adapter controller printed wiring assembly	FC109-A or FC539-A or FC539-B	96890560
Cable assembly, modem, 20 feet (6.1 meters)		96756734 or 88951565 or 88952436†
Cable assembly, NOP-to-CLA		96744895
Cable interface board		96751075 or 96870450
Loop-back test connector		96720152

TOOLS AND TEST EQUIPMENT

No special tools or test equipment are required to install the CR/LP/CLA controller.

UNCRATING

The CR/LP/CLA controller printed wiring assembly is shipped installed in the processor or packed in a heavy-duty cardboard carton. It is buffered from shock and impact damage by an industrial filler. No special instructions are required to remove the CR/LP/CLA controller from the carton.

CRATING

Refer to the above uncrating instructions for crating the unit.

INSPECTION

Inspect the CR/LP/CLA controller as follows:

1. Remove the controller printed wiring assembly from the shipping container.
2. Inspect for physical damage to the printed wiring assembly and components.

POWER REQUIREMENTS

The CR/LP/CLA controller receives +5 V dc and ±12 V dc from the power source of the processor by connection to the assigned backplane slot position. The slot position assigned to the CR/LP/CLA controller is J.

SIGNAL CABLING

The CR/LP/CLA controller is supplied with a single 20-foot (6.1-meter) modem cable and a 5-foot (1.5-meter) CLA-to-NOP cable. To install the cables perform the following steps:

1. Attach the modem cable to the backplane as shown in figure 21-1. Verify, as labeled on the cable connector, the starting and ending backplane pin numbers to which the cable connector should be securely mated. Verify that the connector is mounted over the pins of the backplane.
2. If installing part number 96751075 interface board, connect the CLA interrupt wires E1 and E2 from the cable interface board to the extended pins of the modem cable connector. Wire E1 connects to pin 77, and wire E2 connects to pin 277. Connect the interrupt jumper wires from the interrupt paddle board installed over the backplane at slot L. Connect the wire from L74 to the CR/LP/CLA interface board pin J4-77 and the wire from L229 to the CR/LP/CLA interface board pin J4-277. Note that J4-77 connects to E1 and J4-277 connects to E2 on the CR/LP/CLA interface board via the clad.

   If installing part number 96870450 interface board, connect interrupt jumper wires from L74 and L299 to the extended pins 77 and 277, respectively, of the modem cable.
3. Attach the modem cable shield to the cabinet entry panel using the U-bolts provided.
4. On CYBER 18-5M systems, install the BOP cable over backplane pins 84/284 through 102/302. Refer to the backplane cable diagram in section 2.
5. On CYBER 18-10M and 18-20 systems, install the CLA-to-NOP cable between backplane pins 88/288 through 102/302 and connector J3 of the processor control panel. Refer to the applicable backplane diagram in section 2.
6. On CYBER 18-25 and 18-30 systems, install the CLA-to-NOP cable between backplane pins 88/288 through 102/302 and connector J9 of the dual-processor multiplexer panel. Refer to the backplane cable diagram in section 2.

† FCC EMI qualified part. Use of non-qualified parts on FCC EMI verified systems will void the system verification. Refer to section 1, FCC EMI Verification, for details concerning identification and continuation of this verification.

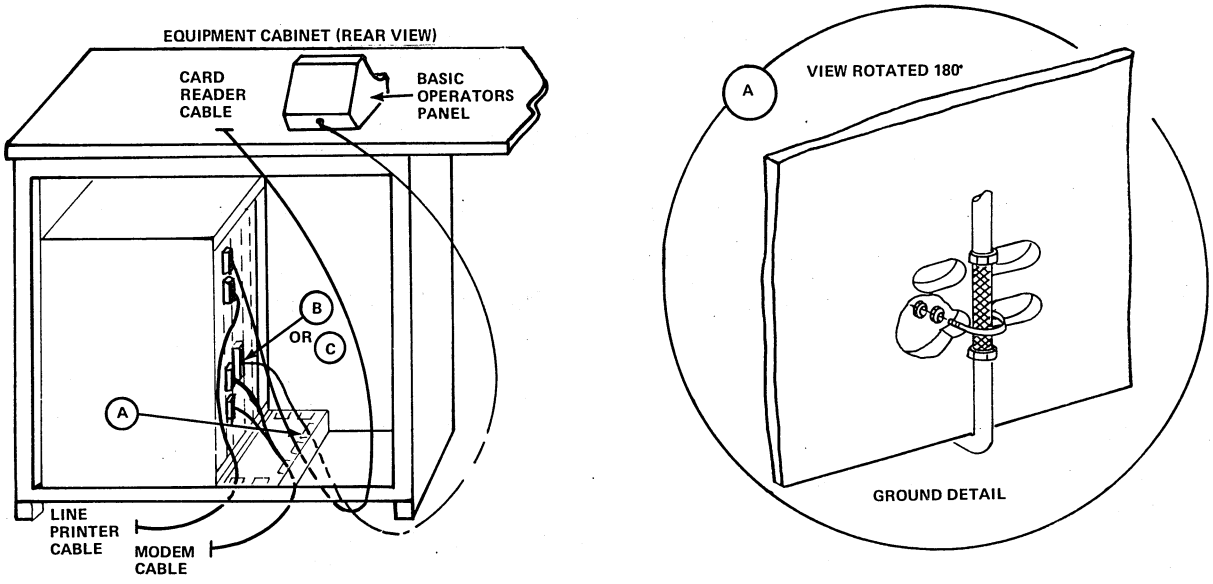

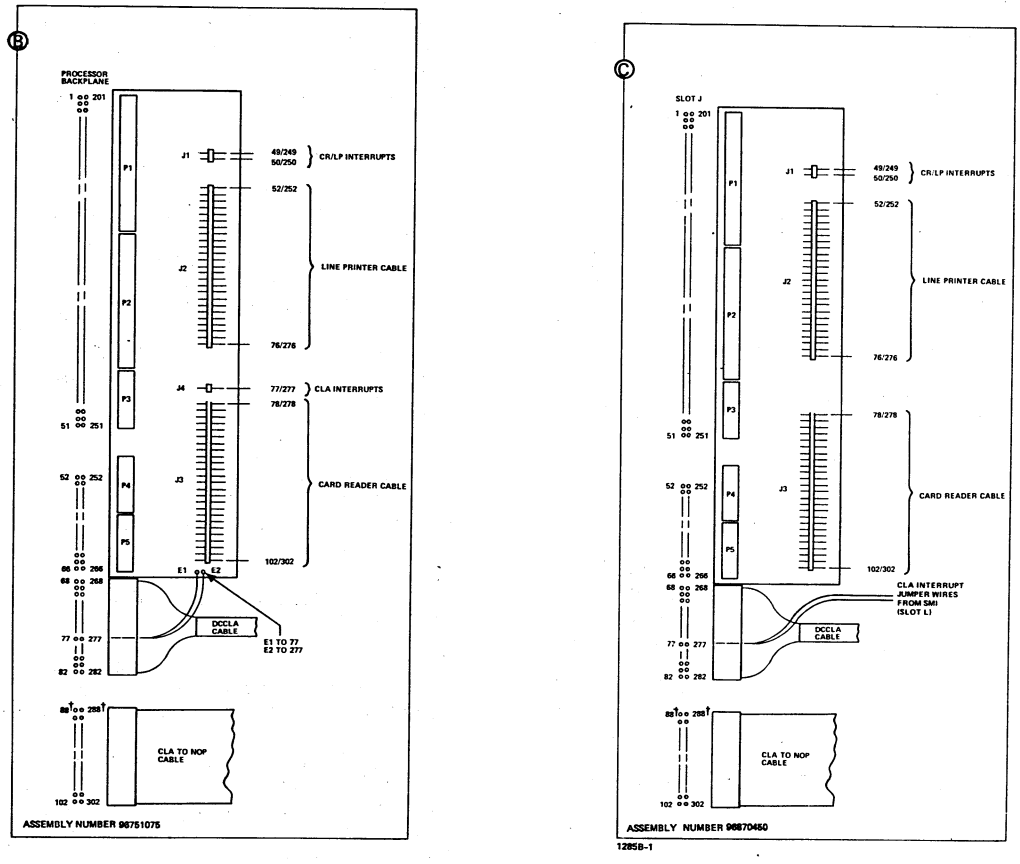

†THE CYBER 18-5M BOP CABLE CONNECTS TO PINS 84/284 THROUGH 102/302.
THE CYBER 18-10M/20/25/30 NOP CABLE CONNECTS TO PINS 88/288 THROUGH 102/302.

2011-1

Figure 21-1. CR/LP/CLA Controller Modem Cable Installation

SWITCH/JUMPER VERIFICATION

Refer to figure 21-2 and table 21-1 when setting the CR/LP/CLA controller switches and jumpers.

EQUIPMENT/STATION/PROTECT SELECT

Set the equipment and station select jumpers to the positions specified in figure 21-2. Remove the protect jumper for program protect operation and install the jumper for unprotected program operation. CRP is card reader protect, LRP is line printer protect, and CLP is communication line adapter protect.

BAUD RATE/DTR/RTS SELECT

Before checking the baud rate jumpers, ask the customer what type of modem (phone line unit) is or will be installed in the system (see the reference communication handbook). Then perform the following steps:

1. If the modem is a synchronous type (baud rate determined by the modem and not by the communication line adapter jumpers), jumpers SA through SC should be out. If the modem is an asynchronous type, jumpers SA through SC should be installed.

2. Set the baud rate jumpers as applicable for system operation. DTR and RTS jumpers should be installed for the user's requirements. With both jumpers installed, constant DTR/RTS is selected. With either jumper out, DTS or RTS must be programmed. The FC109-A is usually shipped with both jumpers installed.

CR/LP/CLA ENABLE JUMPERS

Figure 21-2 illustrates the location of the enable jumpers. To disable a specific section, the jumper is installed. The section is enabled with the jumper removed. CRE is card reader enable, CLE is communication line adapter enable, and LPE is line printer enable.

DEADSTART, SRLIT, ENDS NORMAL/TEST MODE JUMPERS

Figure 21-2 illustrates the location of these jumpers. The following should be installed for normal operation: ENDS, NM; SRLIT, NM; TSTCK, position 1.

LINE PRINTER PARITY JUMPER

Figure 21-2 illustrates the location of the parity jumper. Printer operation is normally with odd parity. Printer operation with no jumper installed to select parity is illegal.

CARD READER FEED TEST SWITCH

Figure 21-2 illustrates the location of the card reader feed test switch. Depressing the switch causes an external feed signal to the card reader.

SIGNAL CABLE INSTALLATION

To complete installation of the signal cable, proceed as follows. Refer to figures 21-1 and 21-3.

1. Connect the cable interface assembly to the processor backplane at slot J. Observe the starting and ending pin number on the interface assembly and ensure that the interface is inserted over these pins on the backplane.

2. Connect the card reader and line printer cables to the interface assembly.

3. Attach the signal cable shield to the processor cabinet at the bottom entry point. The necessary U-bolts are included with the cable assembly. More than one cable may occupy each U-bolt.

4. Route the signal cable out of the cabinet through the bottom cable access point and along the floor to the rear of the cabinet.

5. Continue routing the signal cable to its assigned peripheral and secure the cable to the peripheral connector.

CONTROLLER BOARD INSTALLATION

After all switch and jumper selections have been determined and properly set, insert the controller board into slot J.

CAUTION

The controller board must be installed in an A/Q slot only. Damage results if the board is inserted into any DMA slot.

The CR/LP/CLA controller board must be inserted so that its components are facing left. When inserting the card, apply firm thumb pressure at the upper and lower corners of the board to ensure proper seating into the chassis backplane connector.

DIAGNOSTIC TESTING

Perform the manual operating and diagnostic checks according to the diagnostic decision logic tables in volume 2 of the system hardware maintenance manual.

NOTE

The diagnostic tests and routines described in the system hardware maintenance manual can only be performed after the console display, processor, and flexible disk drive, tape cassette, or card reader (diagnostic load device) installations are complete.

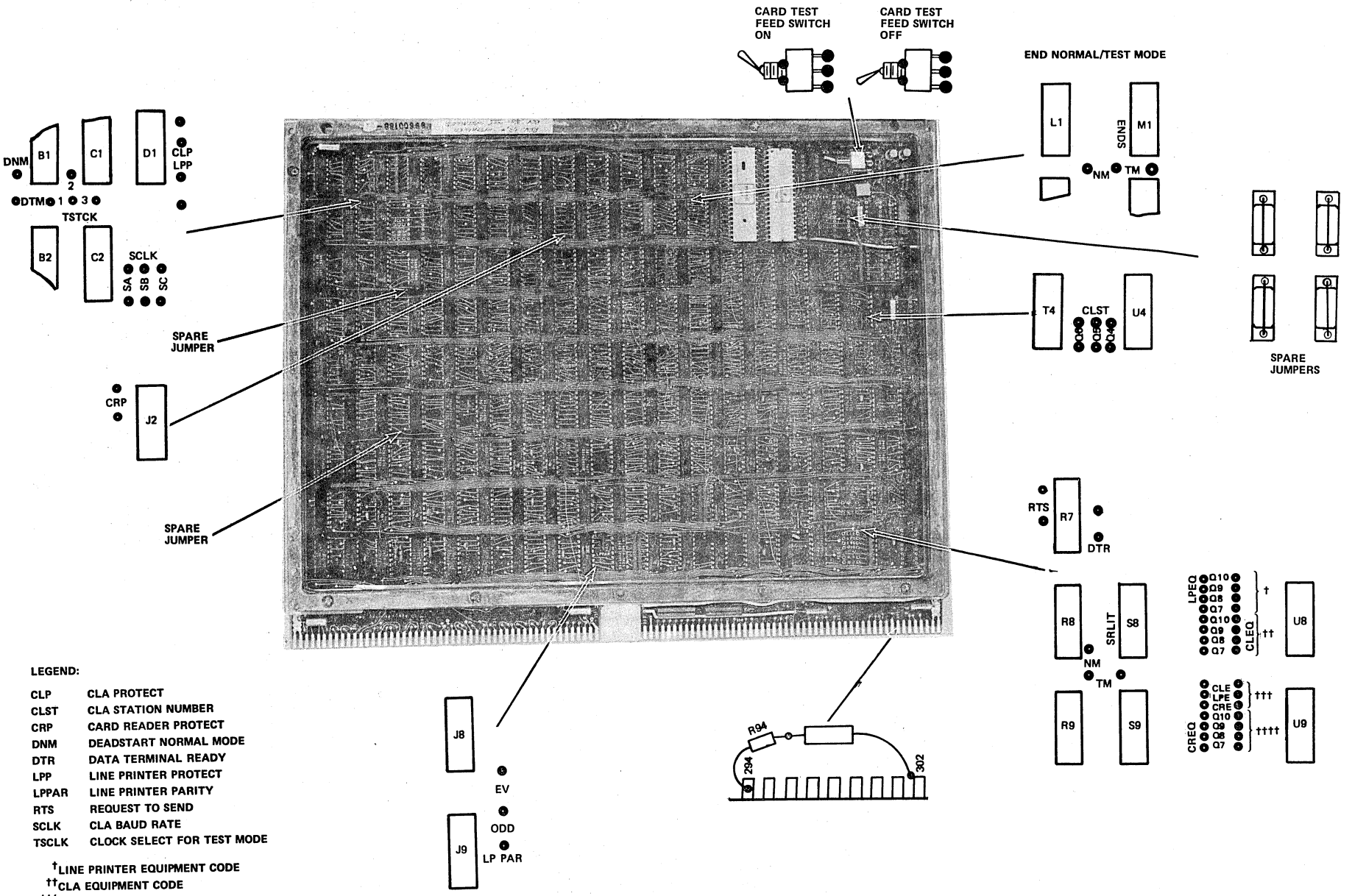

LEGEND:

CLP	CLA PROTECT
CLST	CLA STATION NUMBER
CRP	CARD READER PROTECT
DNM	DEADSTART NORMAL MODE
DTR	DATA TERMINAL READY
LPP	LINE PRINTER PROTECT
LPPAR	LINE PRINTER PARITY
RTS	REQUEST TO SEND
SCLK	CLA BAUD RATE
TSCLK	CLOCK SELECT FOR TEST MODE

†LINE PRINTER EQUIPMENT CODE
††CLA EQUIPMENT CODE
†††CR/LP/CLA ENABLE
††††CARD READER EQUIPMENT CODE

B033

Figure 21-2. CR/LP/CLA Controller Switch/Jumper Locations (Sheet 1 of 2)

EQUIPMENT CODE				SELECT JUMPER				
Q10	Q9	Q8	Q7	Q10	Q9	Q8	Q7	
0	0	0	0	IN	IN	IN	IN	
0	0	0	1	IN	IN	IN	OUT	
0	0	1	0	IN	IN	OUT	IN	
0	0	1	1	IN	IN	OUT	OUT	
0	1	0	0	IN	OUT	IN	IN	LINE PRINTER†
0	1	0	1	IN	OUT	IN	OUT	
0	1	1	0	IN	OUT	OUT	IN	
0	1	1	1	IN	OUT	OUT	OUT	
1	0	0	0	OUT	IN	IN	IN	
1	0	0	1	OUT	IN	IN	OUT	
1	0	1	0	OUT	IN	OUT	IN	COMMUNICATION LINE ADAPTER†
1	0	1	1	OUT	IN	OUT	OUT	CARD READER†
1	1	0	0	OUT	OUT	IN	IN	
1	1	0	1	OUT	OUT	IN	OUT	
1	1	1	0	OUT	OUT	OUT	IN	
1	1	1	1	OUT	OUT	OUT	OUT	

CLA STATION NUMBER			CLA STATION SELECT JUMPER		
Q6	Q5	Q4	CLST6	CLST5	CLST4
0	0	0	IN†††	IN†††	IN†††
0	0	1	IN	IN	OUT
0	1	0	IN	OUT	IN
0	1	1	IN	OUT	OUT
1	0	0	OUT	IN	IN
1	0	1	OUT	IN	OUT
1	1	0	OUT	OUT	IN
1	1	1	OUT	OUT	OUT

BPS RATE	SC	SB	SA
19.2K††	OUT	OUT	OUT
9.6K	OUT	OUT	OUT
4.8K	OUT	OUT	IN
2.4K	OUT	IN	OUT
1.2K	OUT	IN	IN
600	IN	OUT	OUT
300	IN	OUT	IN
150	IN	IN	OUT
110	IN	IN	IN

† SEPARATE EQUIPMENT CODE AS INDICATED FOR EACH EQUIPMENT

†† 19.2K BPS OPERATION REQUIRES THE SAME BPS RATE JUMPER SETTINGS AS 9.6K BPS OPERATION. FOR 19.2K BPS THE CLOCK RATE IS PROGRAMMED TO BE 32 TIMES THE BPS RATE INSTEAD OF THE NORMAL 64 TIMES THE BPS RATE.

††† NORMAL JUMPER ASSIGNMENT

1448-1

Figure 21-2. CR/LP/CLA Switch/Jumper Locations (Sheet 2 of 2)

TABLE 21-1. JUMPER DEFINITION

Jumper Name	PWA Card Location	Jumper Setting	Function
CREQ-Q7 CREQ-Q8 CREQ-Q9 CREQ-Q10	T9	See figure 21-2.	Card reader equipment code select jumpers
LPEQ-Q7 LPEQ-Q8 LPEQ-Q9 LPEQ-Q10	T8	See figure 21-2.	Line printer equipment code select jumpers
CLEQ-Q7 CLEQ-Q8 CLEQ-Q9 CLEQ-Q10	T8	See figure 21-2.	CLA equipment select jumpers
CLST-Q4 CLST-Q5 CLST-Q6	T4	See figure 21-2.	CLA station number select jumpers
CRP LPP CLP	H2 D1 D1	In Not protected†† Out Protected	Card reader program protect Line printer program protect CLA program protect
CRE LPE CLE	T9	In Disable Out Enable††	Card reader controller enable Line printer controller enable CLA enable
LPR EVEN LPR ODD	J9	In Even parity In Odd parity††	Line printer parity†
SA SB SC	C2	See figure 21-2.	CLA internal baud rate
ENDS NM SRLIT NM ENDS TM SRLIT TM DNM DTM	L1 R8 M1 R8 A1 B1	Out Out In In Out Out (Deadstart test mode)	Deadstart test mode
ENDS NM SRLIT NM ENDS TM SRLIT TM DNM DTM	L1 R8 L1 R8 A1 B1	In In Out Out In Out (Normal mode††)	Normal mode
DTR	R7	In Constant DTR Out Programmed DTR††	Constant DTR signal
RTS	R7	In Constant RTS Out Programmed RTS††	Constant RTS signal
TSCLK 1 TSCLK 2 TSCLK3	B1 C1 C1	In 9600 In 4800 In 2400	Clock rate select for test mode†††

†Operation with both jumpers out is illegal.

††Normal configuration

†††Operation with all jumpers out is illegal.

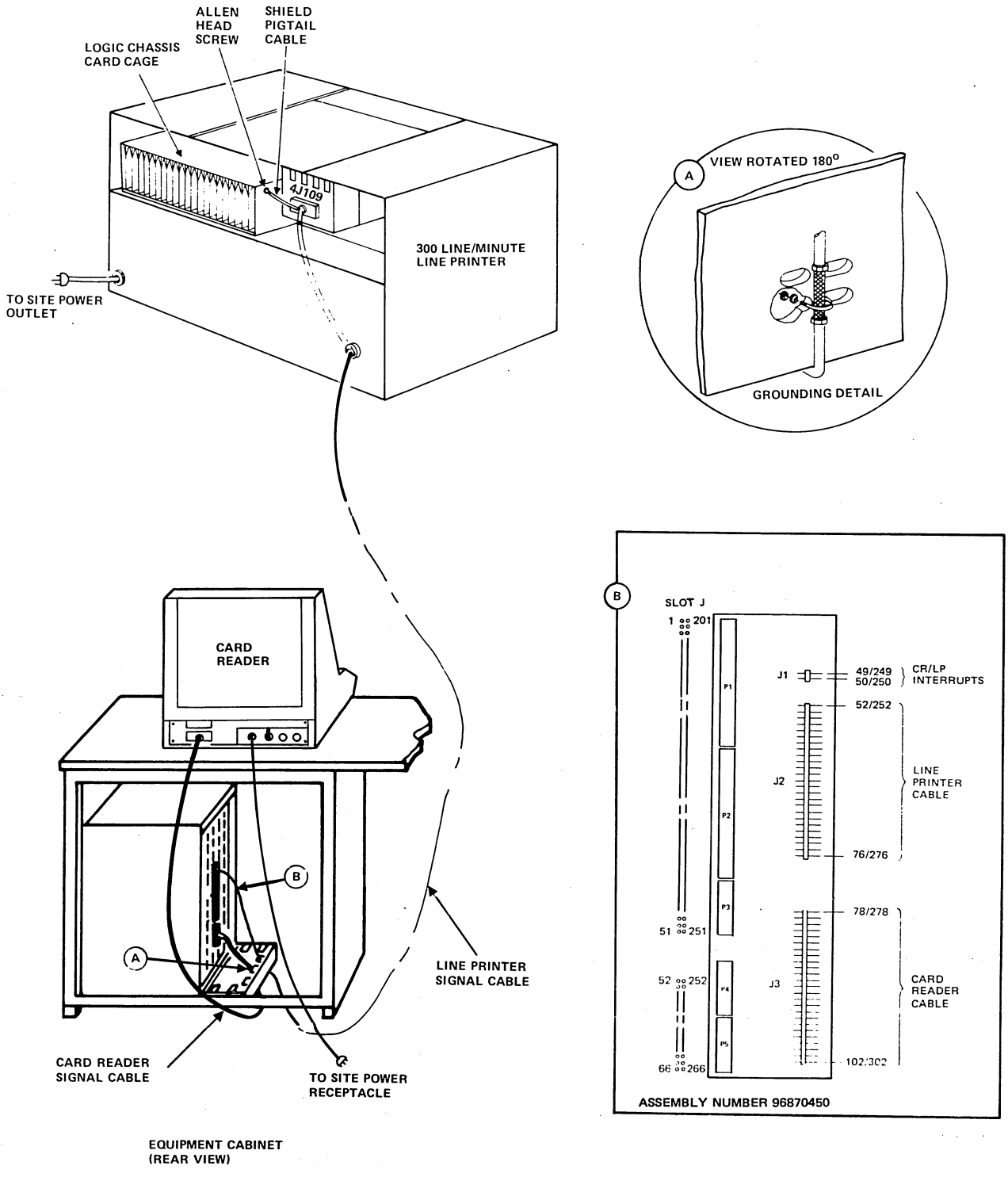

Figure 21-3. CR/LP/CLA Controller Signal Cable Installation

The cartridge disk drive (CDD) is a random-access device using a fixed disk and removable disk packs as the storage medium. The cartridge disk drive subsystem consists of one cartridge disk drive controller (CDDC) interface board and one to four cartridge disk drives. The cartridge disk drive controller interface board plugs directly into the processor chassis backplane. Power for the interface board is obtained from the processor power supplies via backplane connections. The cartridge disk drive (figure 22-1) is a free-standing device. Power for the drive units is obtained from the site power source.

One to four cartridge disk drives are connected to the controller in a daisy-chain fashion as illustrated in figure 22-2. Any combination of single- or double-density cartridge disk drives may be connected in a daisy-chain configuration. All drives, however, must operate at 2400 revolutions per minute.

PARTS AND EQUIPMENT

Parts and Equipment	Equipment Number	Part Number
Cartridge disk drive (60 Hz)	BR704-A	83448086
Cartridge disk drive (50 Hz)	BR704-B	83448103
Cartridge disk drive controller	FA111-A or FA750-A or FA750-B	89600611 or 96720202 or 96721445
Controller-to-drive cable	--	89604656 or 96720204 or 96721480

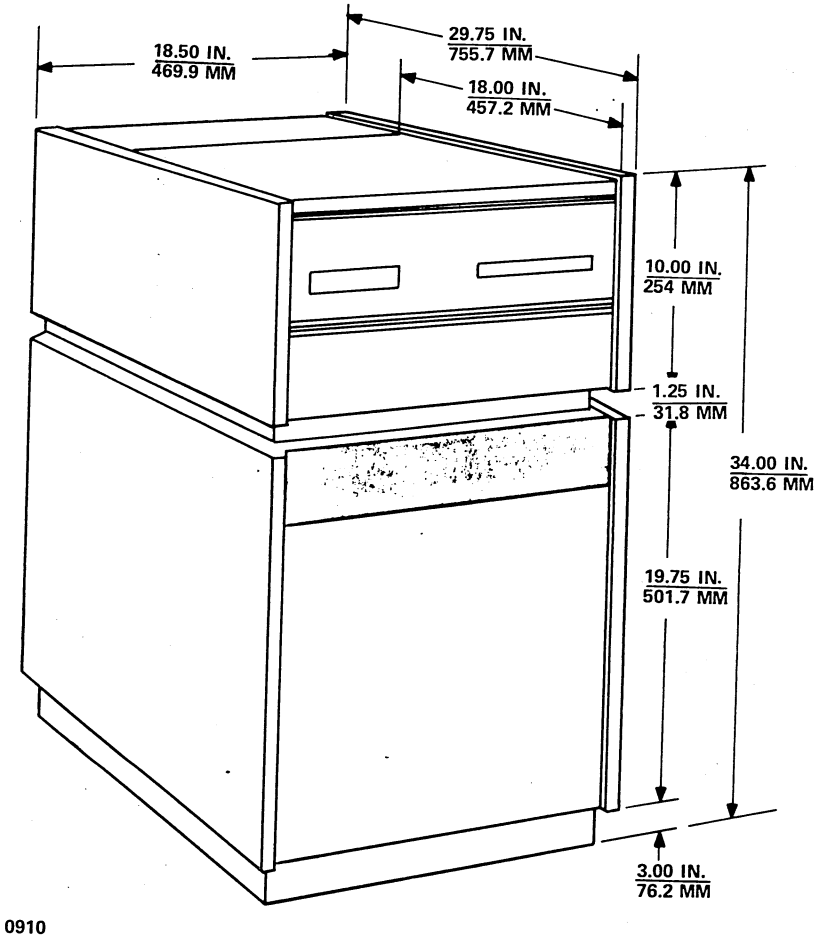

Figure 22-1. Cartridge Disk Drive Cabinet Dimensions

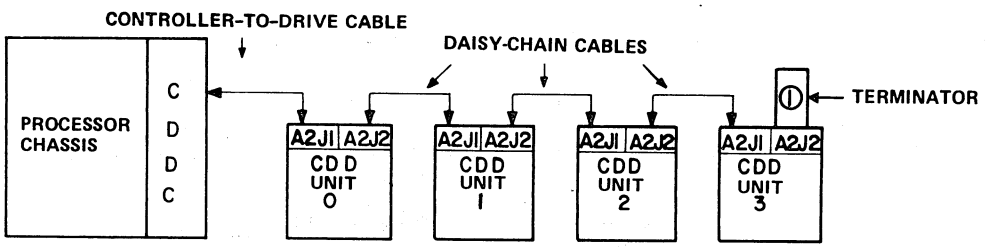

NOTES:

1. **THERE IS A MAXIMUM OF FOUR UNITS IN A DAISY-CHAIN CONFIGURATION.**
2. **THE MAXIMUM CABLE LENGTH FROM THE CONTROLLER TO THE LAST UNIT IN A DAISY CHAIN IS 50 FEET (15.2 METERS).**

0911

Figure 22-2. Typical Daisy-Chain Configuration

Parts and Equipment	Equipment Number	Part Number
Disk daisy-chain cable	--	
Unshielded	--	46337801
Shielded	--	75894169
Terminator	--	46338701

TOOLS REQUIRED

Installation of the cartridge disk drive requires the following tools:

- Scratch pack
- Spirit level, 24 inches (0.69 meters) long
- Screwdriver, medium, Phillips
- End wrenches (various)
- Alignment disk pack
- Vacuum cleaner
- Digital voltmeter

TEST EQUIPMENT

A digital voltmeter is required to determine the voltage of the site power supply.

UNCRATING

Exercise care during uncrating so that any tools being used do not cause damage to the drive. While unpacking the drive, inspect it for possible shipping damage. All claims for this type of damage should be filed promptly with the carrier involved. If a claim is to be filed for damages, save the original packing materials.

After the drive is unpacked, perform the following:

1. Clean the unit exterior to remove dirt and soil marks.
2. Remove the front and rear doors of the cabinet by swinging them open from the top and lifting upward. Ensure that the ground straps are removed.

NOTE

A hard pull is required to free the doors from the base cabinet frame.

3. Remove the top cover, and remove the four bright-red shipping brackets holding the drive to the base cabinet.
4. Remove the electronics cover by removing three Phillips-head screws, one on each side and one at the rear.

CAUTION

While performing the following steps, do not position the carriage manually. Such action could cause the read/write heads to load, thereby damaging the heads and disk.

5. Remove the carriage locking pin, and store it as shown in figure 22-3.
6. Replace the electronics cover and replace the top cover.

CRATING

Refer to the above uncrating instructions for crating the drive.

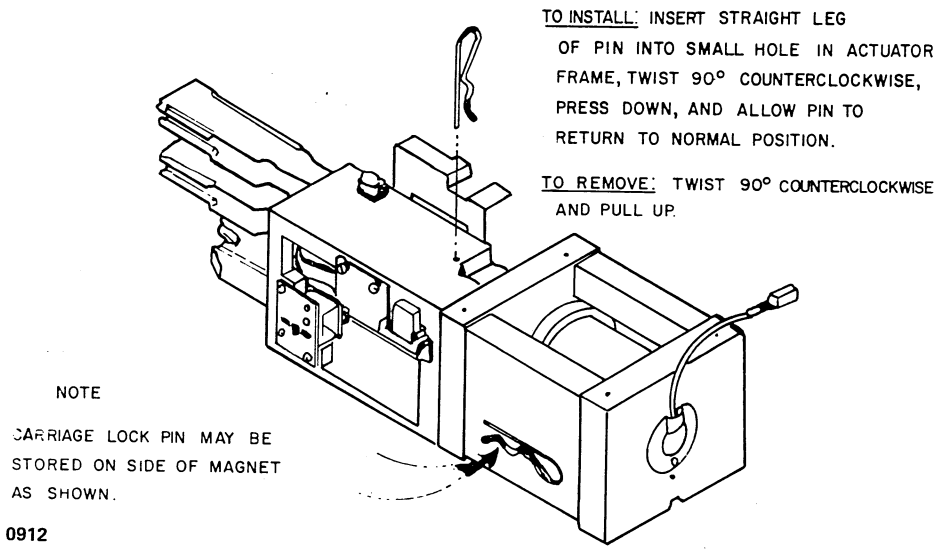

Figure 22-3. Carriage Lock Pin Location

BASE CABINET LEVELING AND ALIGNMENT

Figure 22-1 shows the unit dimensions for reference in determining space allocation. Position the cabinet in its intended operational location, and level as follows:

1. Locate and remove the leveling pads bagged and secured inside the base cabinet.
2. Install the leveling pads at each of the four corners of the cabinet.
3. Lower the leveling pads until the casters no longer contact the floor.
4. Place the spirit level on the main deck so the ends of the level point toward the front and rear of the deck.
5. Adjust the leveling pads until the surface is horizontal, as indicated by the spirit level.
6. Place the spirit level on the main deck so the ends of the level point toward the sides.
7. Adjust the leveling pads until the surface is horizontal, as indicated by the spirit level.
8. Repeat steps 5 through 7 until the main deck is leveled as close as practical with tools available.
9. Open the cartridge receiver cover, remove the plastic dust cover, and close cover.

POWER REQUIREMENTS

The input power requirements for the cartridge disk drive are given in table 22-1.

POWER WIRING

The ac power cable plugs into the bottom of the power supply assembly and exits the unit through the bottom rear of the base cabinet. Release the cable entry cover screws located on the bottom rear of the cabinet, and slide the cover open. Route the power cord through the cable entry and to the site power source.

Prior to connecting the drive to the site power source, check the voltage adjustment plug for agreement with the site power source voltage requirements specified in figure 22-4.

The voltage adjustment plug is located at the rear of the unit, underneath the power supply and adjacent to the power cord.

NOTE

When units are field-configured for any line voltage other than 120 V, the Canadian Standards Association Certification Marker must be removed from the equipment in order to comply with requirements of the Canadian Standards Association.

GROUNDING OPTIONS

The disk drive is shipped with the logic (dc) ground and the chassis (ac) ground connected together at the left-front corner of the power supply as shown in figure 22-5. If the system configuration requires the separation of these grounds, perform the following:

1. Open the cabinet top cover.
2. Remove the electronics cover.

TABLE 22-1. INPUT POWER REQUIREMENTS

Characteristics	Specifications
Input power source	
60 Hz units	100-250 volts rms in 10-volt increments (+10 percent, -15 percent), 59-60.6 Hz, single phase
50 Hz units	100-250 volts rms in 10-volt increments (+10 percent, -15 percent), 49-50.5 Hz, single phase
Input current	The following current readings are made at 50 Hz and nominal line voltage with the accessor performing worst-case (maximum power) repeat seeks. Volts — Amps 100 — 5.6 110 — 5.0 120 — 4.6 130 — 4.3 140 — 4.0 150 — 3.8 160 — 3.6 170 — 3.3 180 — 3.2 190 — 3.0 200 — 2.9 210 — 2.7 220 — 2.6 230 — 2.5 240 — 2.4 250 — 2.3 Surge current during spindle start is twice the above value and lasts 5 seconds.
Power factor	0.8
Power (nominal)	310 watts, 1059 Btu

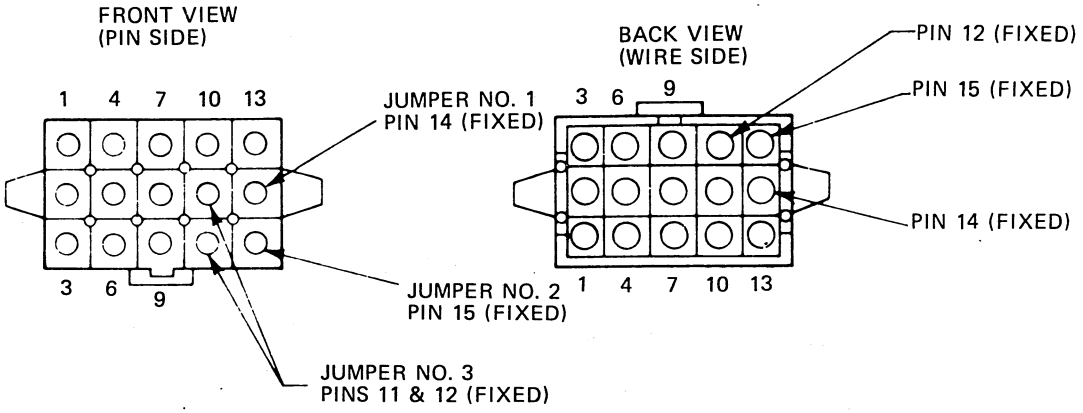

NOTE

FOR PROPER PIN CONFIGURATION USE THE ABOVE ILLUSTRATION. IGNORE PIN NUMBERING ON THE CONNECTOR.

VOLTAGE	JUMPER 1		JUMPER 2	
	FIXED PIN	MOVABLE PIN	FIXED PIN	MOVABLE PIN
100	14	4	15	7
110	14	3	15	7
120	14	2	15	7
130	14	1	15	7
140	14	6	15	8
150	14	5	15	8
160	14	4	15	8
170	14	3	15	8
180	14	2	15	8
190	14	1	15	8
200	14	6	15	9
210	14	5	15	9
220	14	4	15	9
230	14	3	15	9
240	14	2	15	9
250	14	1	15	9

0913

Figure 22-4. Voltage Adjustment Plug Configuration

NOTE

GROUND MUST BE INSTALLED WHEN
DYNAMIC BRAKE OPTION IS INSTALLED.

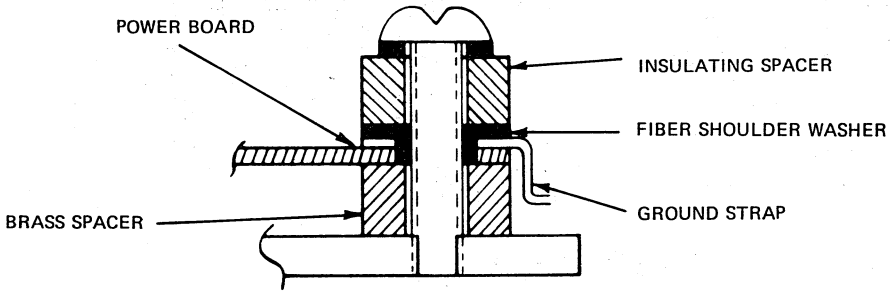

LOGIC (DC) GROUND CONNECTED TO CHASSIS (AC) GROUND

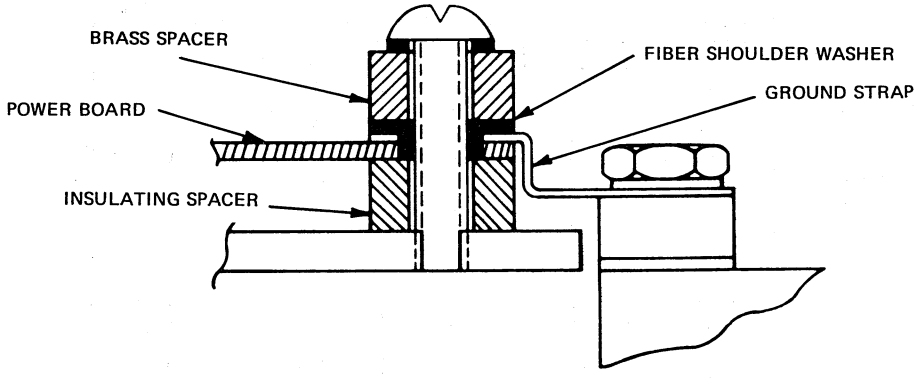

LOGIC (DC) GROUND ISOLATED FROM CHASSIS (AC) GROUND

0914

Figure 22-5. Grounding Options

3. Open the power supply cover assembly.
4. Rearrange the spacers as shown in figure 22-5 for the isolated configuration.
5. Close the power supply cover.
6. Install the electronics cover.
7. Close the cabinet top cover.

SECTOR OPTION CONVERSION

NOTE

The supplied diagnostics, software, and disk packs require the use of the 29-sector format. Any other format is nonstandard. All drives supplied have the 29-sector format selected.

Adjust the sensor mount for the required sector option as follows:

1. Remove the lower electronics cover.
2. Loosen the sensor mount screw illustrated in figure 22-6.
3. Lift the rear of the sensor mount and place the guide pin in the sensor mount hole selected from the table in figure 22-6.
4. Tighten the sensor mount screw.

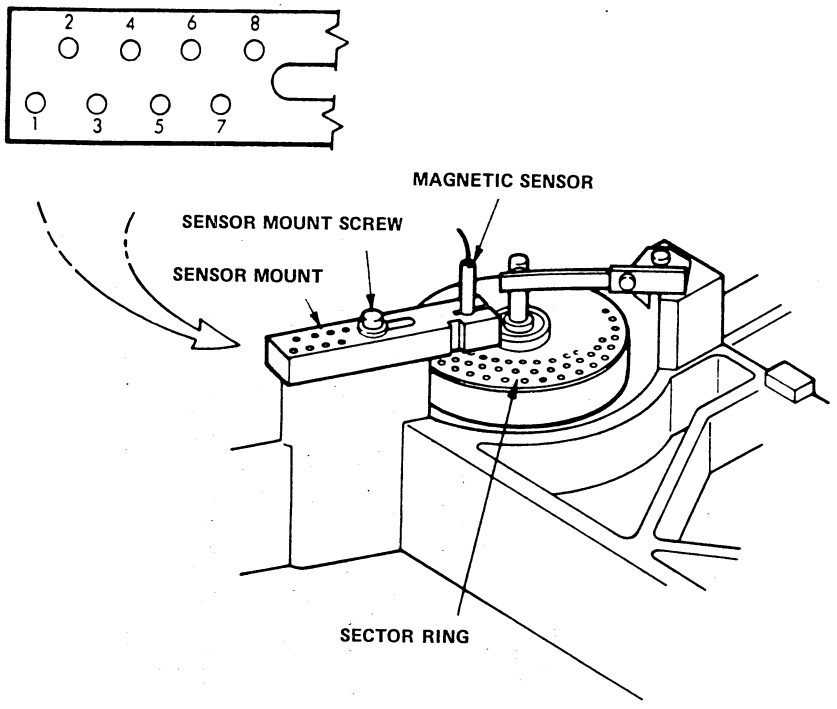

REQUIRED SECTOR (SWITCH SETTING FOR SECTOR)	SENSOR MOUNT HOLE NUMBER	RING HOLES
29 OR SOFT SECTOR	1	29
40, 20, 10, 5	2	40
48, 24, 12, 6, 3	3	48
50, 25	4	50
60, 30, 15	5	60
64, 32, 16, 8, 4, 2	6	64
56, 28, 14, 7 (8 RING)	7	56
72, 36, 18, 9 (8 RING)	8	72

0915

Figure 22-6. Sector Option Conversion

5. Perform the fixed disk index/sector transducer check and adjustment as specified in section 6 of the CYBER 18 Computer Systems central processor hardware maintenance manual.

NOTE

The cartridge disk drive installation must be completed before performing these checks.

6. Replace the lower electronics cover.

DRIVE OPTION SWITCHES

Various modes of operation are made possible by option switches located on the disk drive control, data recovery, sector, servo, and input/output circuit boards. These switches are set to customer requirements. The location and settings of the switches are shown in figures 22-7

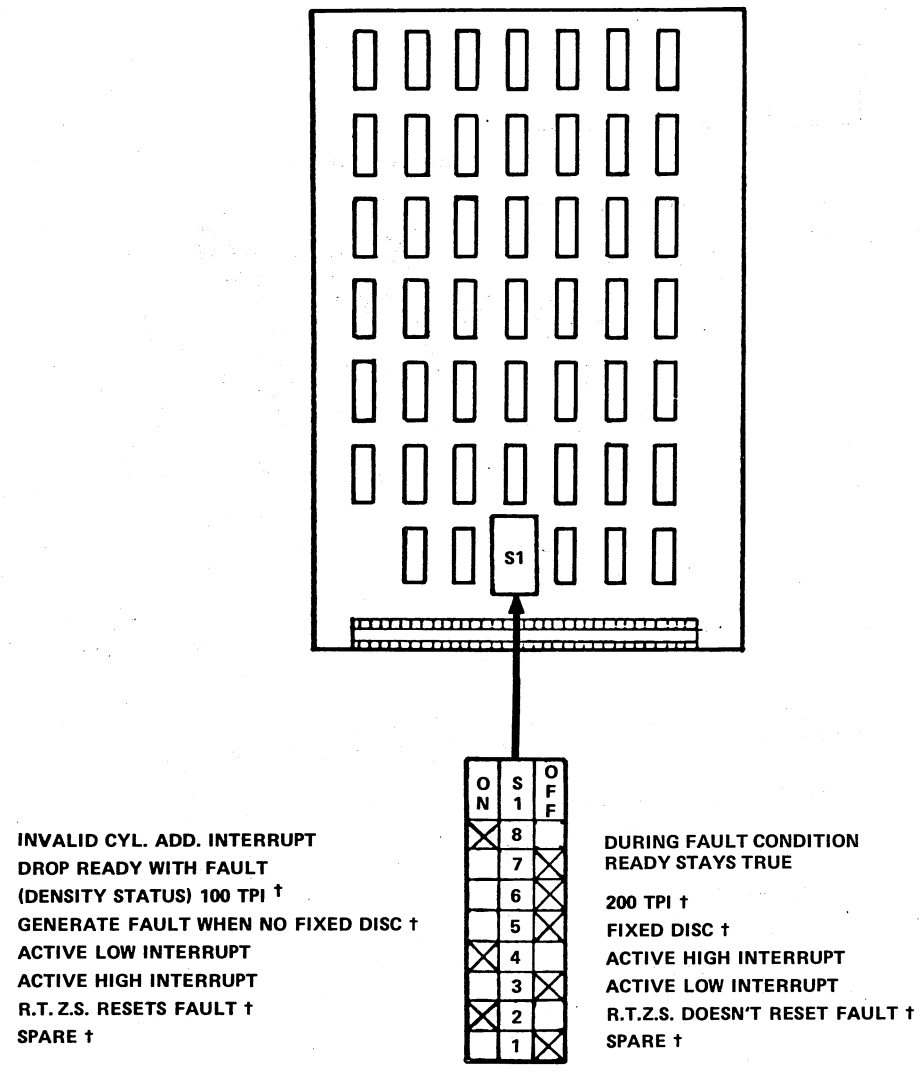

Figure 22-7. Disk Drive Control Board

through 22-11. Remove each circuit board, one at a time, and verify that the option switches are set to the required positions. The circuit boards are located in the left-rear corner of the drive electronics compartment. Access is gained by raising the drive top access to the vertical position from the rear.

DAISY-CHAIN CONFIGURATION

The unit number is defined as the position of the cartridge disk drive in the daisy-chain. The drive units have internal switches on the 3M-I/O circuit board (figure 22-11) for

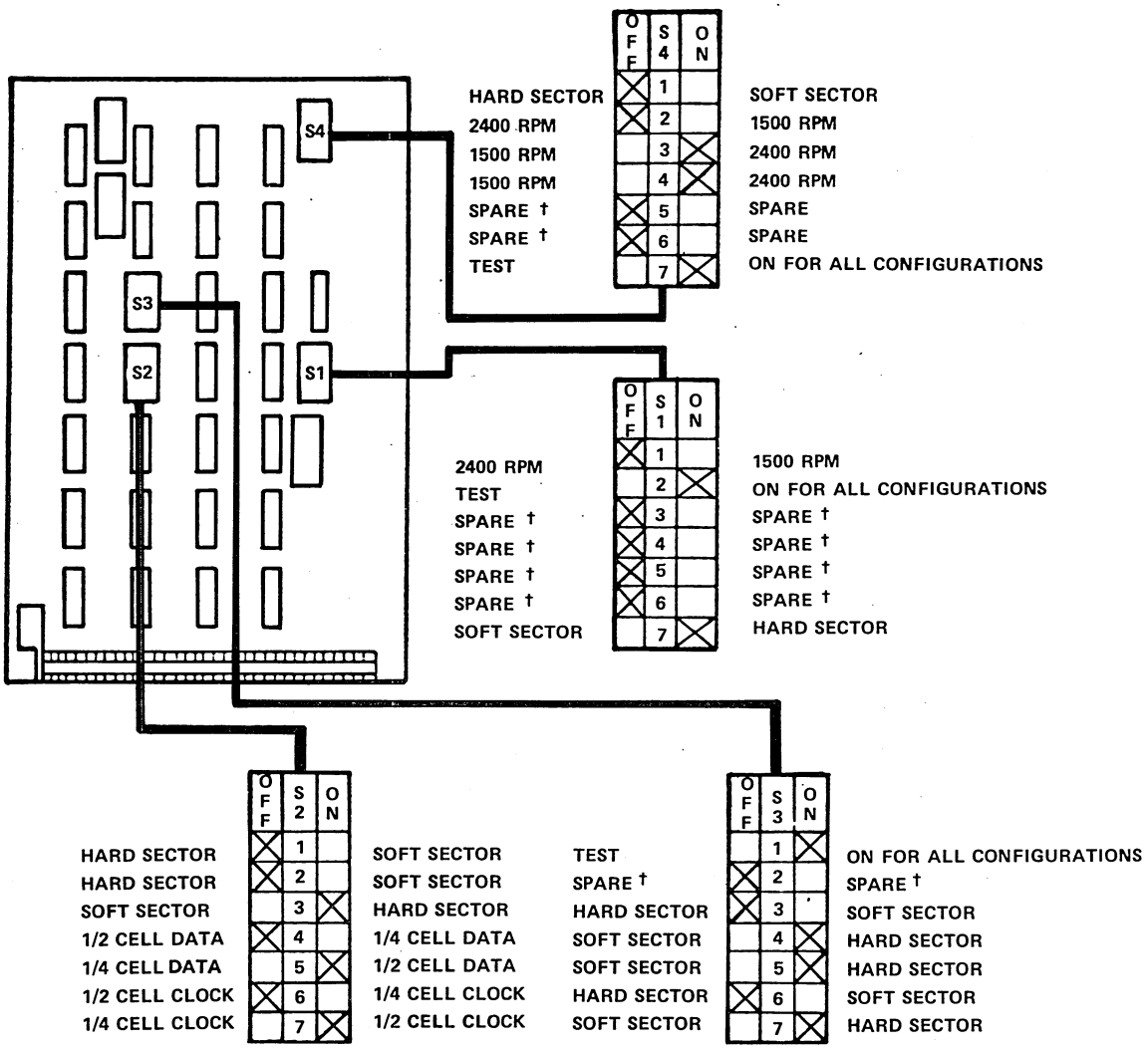

☒ INDICATES SWITCH POSITION

† THESE ARE THE NORMAL POSITIONS OF THE SWITCHES. HOWEVER, DIFFERENCES MAY EXIST BETWEEN DIFFERENT DRIVE ASSEMBLIES. THEREFORE, THE REQUIRED POSITION OF THE SWITCHES SHOULD BE VERIFIED TO BE AS SPECIFIED IN THE DISK DRIVE HARDWARE MAINTENANCE MANUAL RECEIVED WITH THE DRIVE.

0917

Figure 22-8. Disk Drive Data Recovery Board

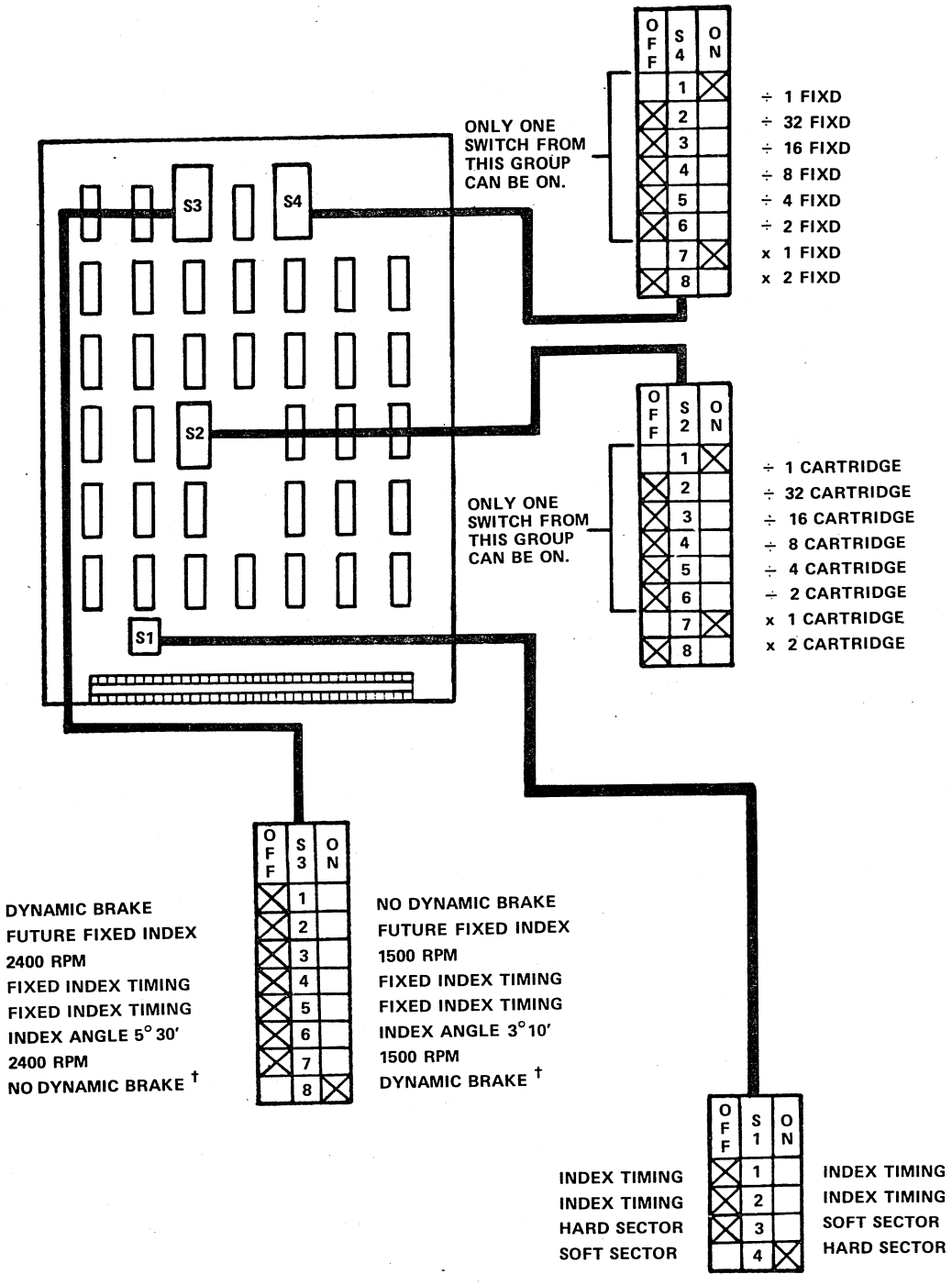

☒ INDICATES SWITCH POSITION

† THESE ARE THE NORMAL POSITIONS OF THE SWITCHES. HOWEVER, DIFFERENCES MAY EXIST BETWEEN DIFFERENT DRIVE ASSEMBLIES. THEREFORE, THE REQUIRED POSITION OF THE SWITCHES SHOULD BE VERIFIED TO BE AS SPECIFIED IN THE DISK DRIVE HARDWARE MAINTENANCE MANUAL RECEIVED WITH THE DRIVE.

0918-1

Figure 22-9. Disk Drive Sector Board

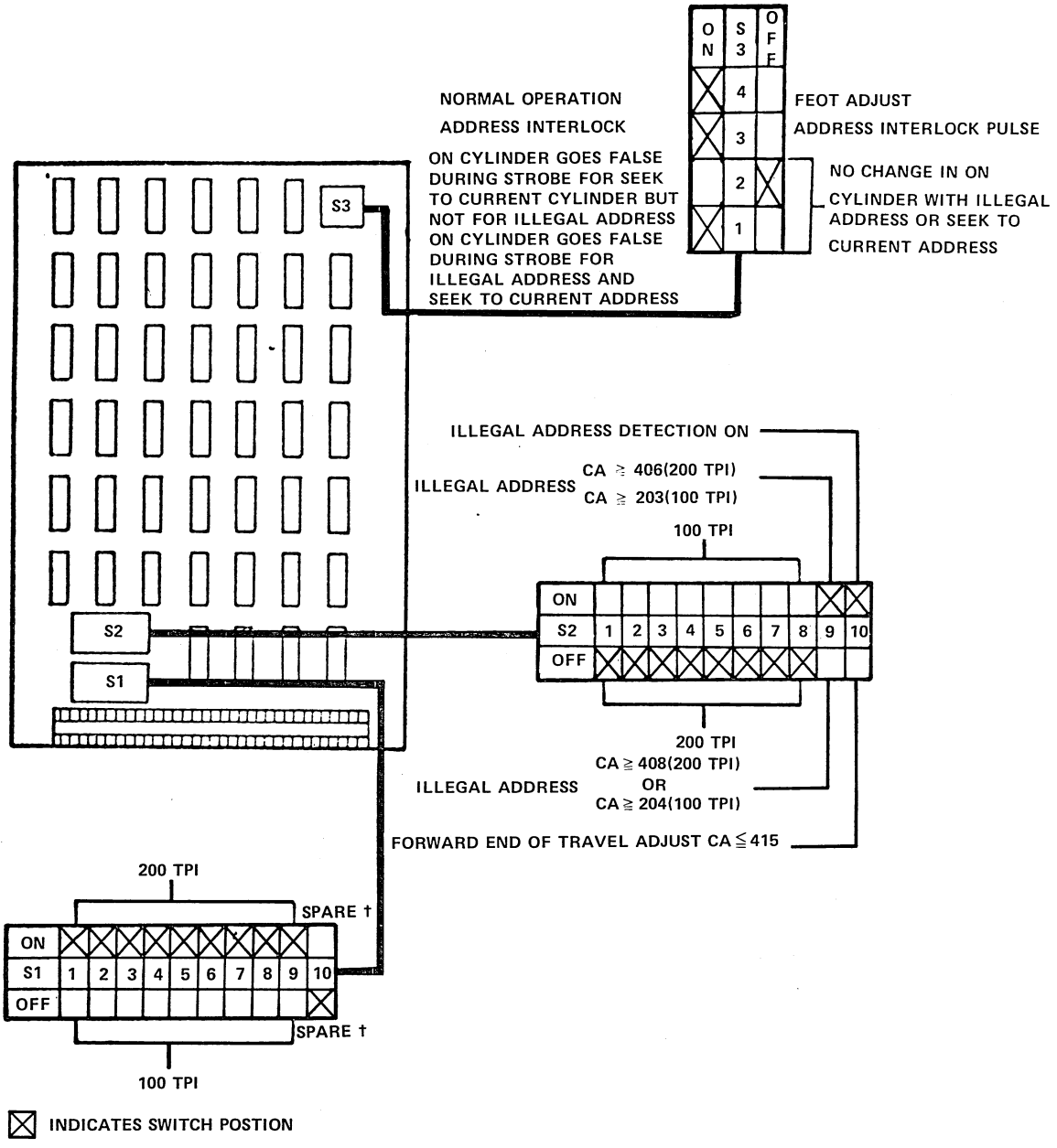

☒ INDICATES SWITCH POSTION

† THESE ARE THE NORMAL POSITIONS OF THE SWITCHES. HOWEVER, DIFFERENCES MAY EXIST BETWEEN DIFFERENT DRIVE ASSEMBLIES. THEREFORE, THE REQUIRED POSITION OF THE SWITCHES SHOULD BE VERIFIED TO BE AS SPECIFIED IN THE DISK DRIVE HARDWARE MAINTENANCE MANUAL RECEIVED WITH THE DRIVE.

0919

Figure 22-10. Disk Drive Servo Board

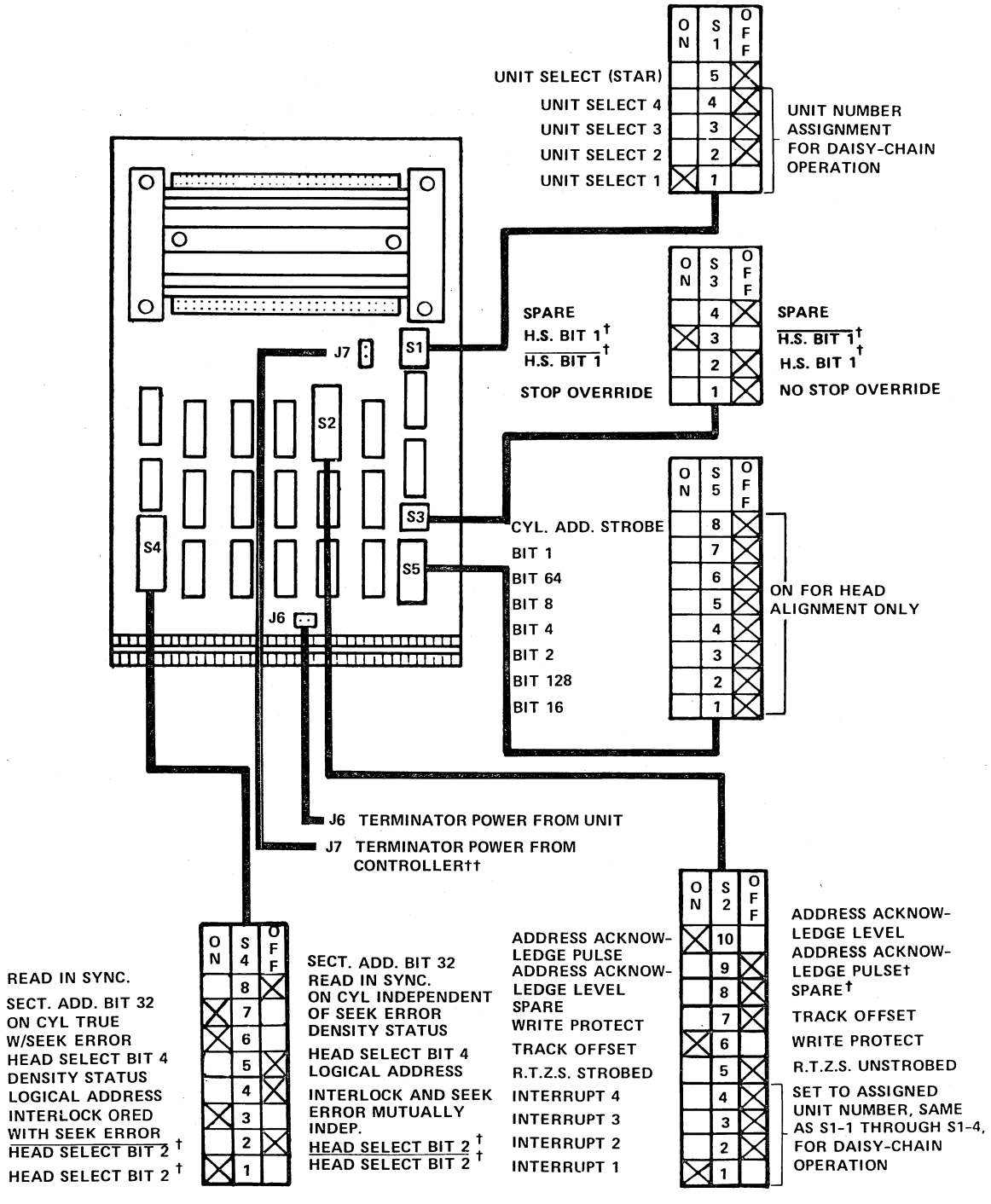

☒ INDICATES NORMAL SWITCH POSITION

†WITH HEAD SELECT SWITCHES SET TO UNINVERTED POSITIONS, HEADS ARE NUMBERED 0,1,2,3 FROM TOP TO BOTTOM. WITH HEAD SELECT SWITCHES SET TO INVERTED POSITIONS, HEADS ARE NUMBERED 0,1,2,3 FROM BOTTOM TO TOP. HEAD SELECT BIT 215 EQUIVALENT TO DISK SELECT. HEAD SELECT BIT 1 SELECTS THE TOP OR BOTTOM SURFACE OF THE SELECTED DISK.

††NORMAL JUMPER CONNECTION

0920-2

Figure 22-11. Disk Drive 3M-I/O Board

selection of unit number and seek complete/interrupt configuration. Refer to figure 22-12, and set switches S1 and S2 to the required positions for each drive in the daisy chain.

NOTE

It is not necessary for the unit number and seek complete switch settings to match the physical position of the drive in the daisy chain. The only requirement is that both switches on the same drive be set to the same number.

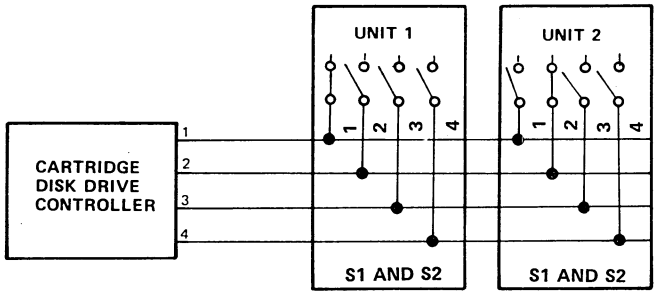

0921-1

Figure 22-12. Disk Drive Unit Number and Seek Completion Switch Configuration

CARTRIDGE DISK DRIVE CONTROLLER

The cartridge disk drive controller (CDDC) printed circuit board is an 11- by 13.5-inch (279- by 343-millimeter) printed circuit board to be installed in the processor chassis.

UNCRATING AND CRATING

The controller circuit board is shipped in a heavy-duty cardboard carton. It is buffered from shock and impact damage by an industrial filler. No special instructions are required for crating or uncrating the controller.

INSPECTION

Inspect the controller as follows:

1. Remove the printed circuit board from its shipping container.
2. Inspect the board and components for physical damage.

POWER REQUIREMENTS

The cartridge disk drive controller receives +5 V dc from the processor power supply by connection to the backplane card slot for the controller. The controller may be installed in any A/Q-DMA card slot with the correct interrupt wiring. Refer to section 1 for card slot assignments.

SWITCH AND JUMPER SELECTIONS

Figure 22-13 illustrates the location of switches and jumpers on the cartridge disk drive controller that must have their positions verified prior to installation of the circuit card in the processor. Table 22-2 identifies these controls and defines their functions. Set each of the controls to the configurations defined in tables 22-3 through 22-5. After verifying the controls, insert the controller board into the processor backplane.

SIGNAL CABLES AND SUBSYSTEM CONNECTIONS

The cartridge disk drive controller is supplied with a single 20-foot (5.1-meter) cable (figure 22-14) for connection from the processor backplane CDDC slot to the disk drive. Each drive is supplied with a single daisy-chain cable (figure 22-15) and one terminator plug.

CONTROLLER SIGNAL CABLE INSTALLATION

CAUTION

Ensure that processor power is off before inserting or removing the cartridge disk drive controller or signal cable from the processor card slot or backplane connections.

Connect the signal cable connectors P1, P2, and P4 to the processor backplane pins, as indicated in figure 22-14. Route the cable from the processor, via the cable entry tray, into the first disk drive, via its cable entry cutout at the bottom-rear of the cabinet floor. Install the strain relief clamp, and connect grounds as shown in figure 22-14. Connect cable connector P3 to the disk drive connector A2J1.

CAUTION

Ensure that pins 26 and 226 are not connected to the cable. Make sure that all pins of the backplane are properly inserted in the connector.

For interrupt installation, refer to section 20.

DISK DAISY-CHAIN CABLES

The daisy-chain cable is connected to the first drive at connector A2J2, exits the drive via the cabinet floor, and connects to A2J1 of the succeeding drive. The terminator plug is inserted into the A2J2 connector of the last drive in the daisy chain. Ensure that all grounds (figures 22-14 and 22-15) are connected. Figure 22-2 illustrates the proper daisy-chain connection.

INITIAL CHECKOUT AND START-UP

This procedure should be used to make the first power application to the unit. The procedure assumes that the

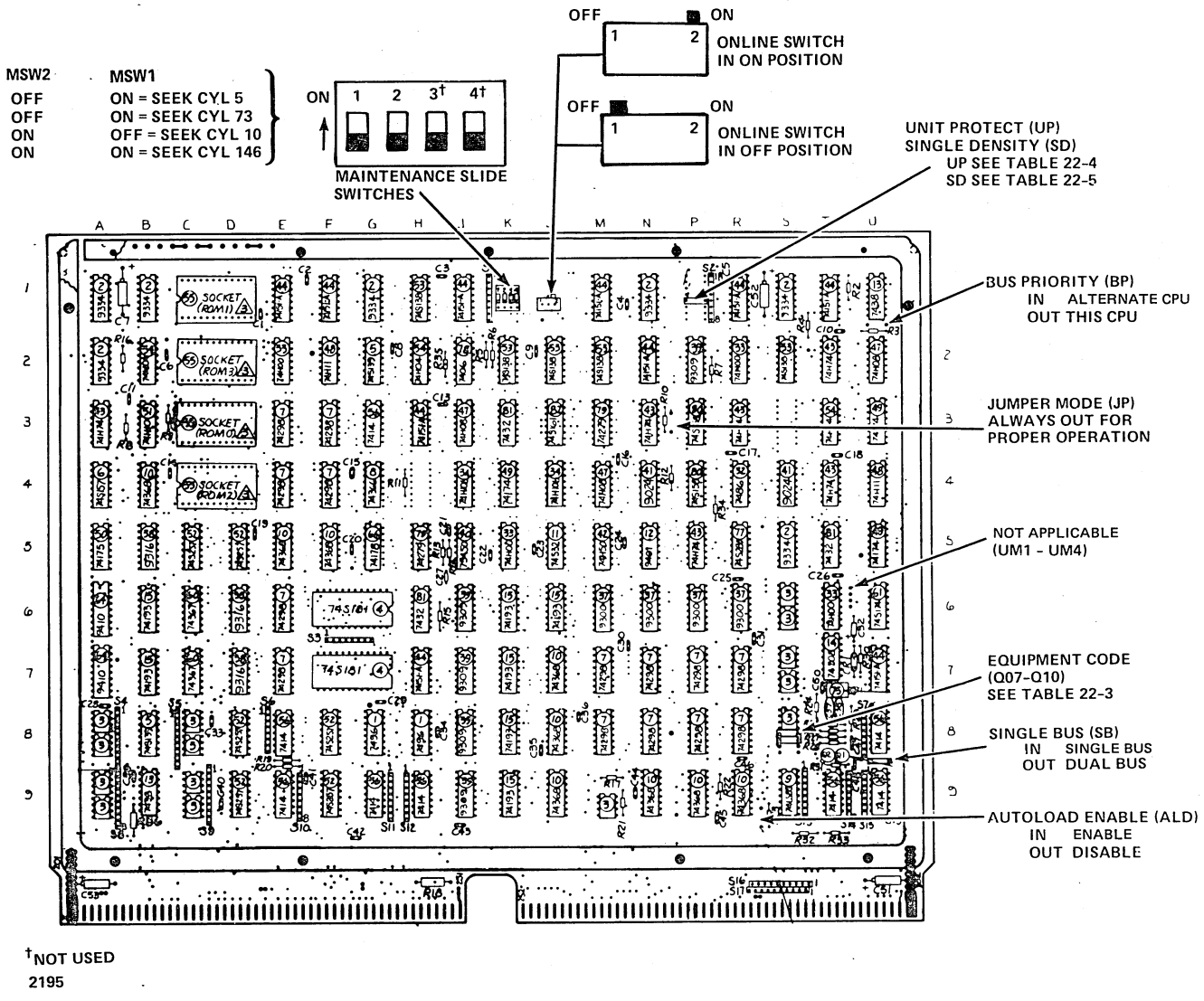

†NOT USED

2195

Figure 22-13. CDDC Switch and Jumper Location and Selection

TABLE 22-2. CARTRIDGE DISK DRIVE CONTROLLER MANUAL CONTROLS

Control Name	Position on Controller Board	Control Type	Function	Control Settings
Q10-Q07	S8	Removable jumper plug	Determines the equipment code of the controller††	Inserted - Logic 1 Removed - Logic 0
UP0-UP3	P1	Removable jumper plug	Places the corresponding unit in a protected or unprotected state	Inserted - Unit protected Removed - Unit unprotected
SD0-SD3	P1	Removable jumper plug	Places the corresponding unit in a single-density or double-density state	Inserted - Single density Removed - Double density
BP	U1	Removable jumper plug	Determines bus usage in case of simultaneous bus requests††	Inserted - Alternate CPU Removed - This CPU
ALD	R9	Removable jumper plug	Enables the CDD to be the auto-load device	Inserted - Autoload enabled Removed - Autoload disabled
SB	U8	Removable jumper plug	Single/dual bus access††	Inserted - Dual bus Removed - Single bus
JM	P3	Removable jumper plug	Must always be removed	--
LS	L1	Slide switch	Selects either normal, online CPU operations, or offline maintenance operations. This switch should always be in the online position when the controlled board is inserted into the card slot.	OFF - Offline maintenance ON - Normal; online operations
MS1-MS4	K1	Switch block	Selects the offline maintenance when the line switch is in the OFF position†	--
UM1-UM4	T6	N/A	Not applicable	--

†These switches are to be used only by higher level support personnel. Ensure that the line switch is always in the ON position.

††These control settings are a part of the system configuration. When a replacement controller is to be inserted, the control settings of the replacement board should be made to match those of the removed board.

preceding operations of this section have been completed successfully.

1. Ensure that the drive power supply assembly circuit breakers are off.
2. Open the cabinet top cover.

CAUTION

Do not position the carriage manually. Such action could cause the read/write heads to load and be damaged.

3. Grasp and turn the spindle; it should rotate with little resistance.
4. Using gauze dampened with media-cleaning solution, wipe clean the spindle surface and hub.
5. Using a vacuum cleaner, remove any dust or dirt from the interior of the cartridge receiver.
6. Ensure that the START/STOP switch is in the off, or out position.

TABLE 22-3. EQUIPMENT CODE SELECTION

Hex Value	Equipment Code Q Bits				Enable/Disable Jumpers†			
	10	9	8	7	Q10	Q09	Q08	Q07
0	0	0	0	0	D	D	D	D
1	0	0	0	1	D	D	D	E
2	0	0	1	0	D	D	E	D
3	0	0	1	1	D	D	E	E
4	0	1	0	0	D	E	D	D
5	0	1	0	1	D	E	D	E
6	0	1	1	0	D	E	E	D
7	0	1	1	1	D	E	E	E
8	1	0	0	0	E	D	D	D
9	1	0	0	1	E	D	D	E
10	1	0	1	0	E	D	E	D
11	1	0	1	1	E	D	E	E
12	1	1	0	0	E	E	D	D
13	1	1	0	1	E	E	D	E
14††	1	1	1	0	E	E	E	D
15	1	1	1	1	E	E	E	E

NOTES:

†D Disabled, jumper removed
E Enabled, jumper installed

††Normal position

TABLE 22-4. UNIT PROTECT SELECTION

Protect Unit	Insert Jumper
Cartridge disk drive Unit 0†	UP0
Cartridge disk drive Unit 1†	UP1
Cartridge disk drive Unit 2†	UP2
Cartridge disk drive Unit 3†	UP3

†The normal position is with jumper installed.

TABLE 22-5. UNIT DENSITY SELECTION

Unit Number	Jumper Position
0	SD0
1	SD1
2	SD2
3	SD3

NOTE:

Insert jumper for single density; remove jumper for double density.

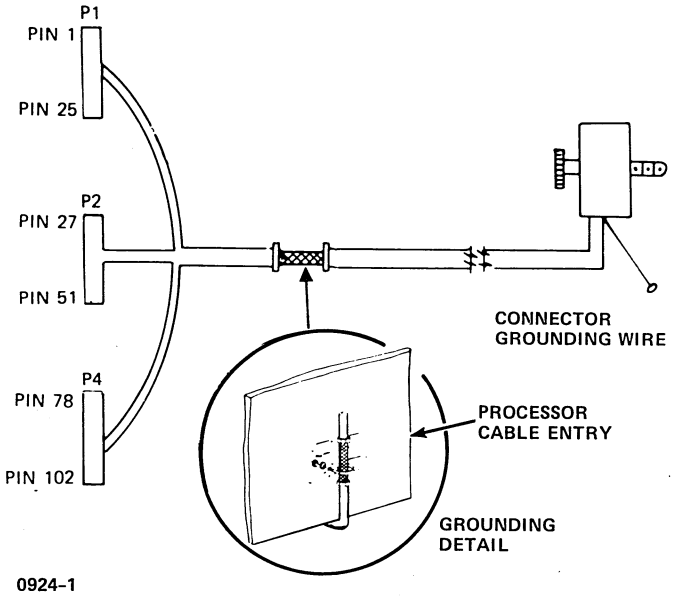

Figure 22-14. Controller-to-Drive Signal Cable

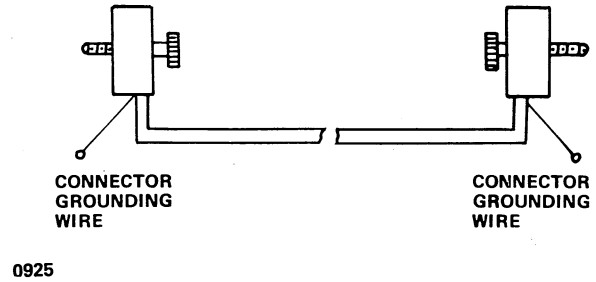

Figure 22-15. Daisy-Chain Cable

CAUTION

When units have a daisy-chain configuration for power, proper phasing should be verified at the device end for each device prior to connecting the power cable.

7. Ensure that the P12 jumper plug is correctly jumpered and in place according to figure 22-4, and connect the input power cable to the correct external power source.
8. If the power source to the drives is protected by a circuit breaker, set that circuit breaker to the on position.
9. Install and secure all cabinet panels. Ensure that the ground straps are connected.
10. Set the drive power supply assembly circuit breakers to on, and verify that the blower starts.
11. Pull back the cartrdige hold-down arms, and install the disk cartridge. Refer to the disk cartridge installation procedures in the cartridge disk drive subsystem hardware maintenance manual.
12. Inspect the disk cartridge as specified in the preventive maintenance subsection of the system hardware maintenance manual.
13. Press the start switch to apply power to the spindle motor. Verify that the spindle drive and disk cleaner brush motors start.
14. Assure that the READY light is illuminated in approximately 70 seconds.
15. Allow the drive and pack to reach thermal stabilization; this takes approximately 20 minutes.
16. Perform the diagnostic testing.

DIAGNOSTIC TESTING

Perform the manual operating and diagnostic checks according to the diagnostic decision logic tables (DDLTs) described in the CYBER 18 computer systems central processor hardware maintenance manual and the CDDC subsystem hardware maintenance manual.

NOTE

The diagnostic tests and routines described in the subsystem hardware maintenance manual can be performed only after the console display, processor, and flexible disk drive or tape cassette (diagnostic load device) installations are complete.

Successful completion of the diagnostics completes the subsystem installation. If the diagnostics fail, troubleshoot the system or make the necessary adjustments and rerun the diagnostics.

The phase-encoded (PE) magnetic tape subsystem consists of a controller, formatter, one to four magnetic tape transports, and the required interface cables.

The following terminology is used in this section:

- Magnetic tape subsystem - This consists of the magnetic tape controller, the magnetic tape transport unit, the formatter, the interface cables, and an equipment cabinet.
- Magnetic tape transport unit - This consists of either the seven- or nine-track, single- or dual-mode, NRZI or PE transport and formatter.
- Magnetic tape transport - This consists of either the seven- or nine-track, single- or dual-mode, NRZI/PE transport without a formatter. The magnetic tape transport drive is cable interconnected with the formatter.

This section is arranged to allow installation of a magnetic tape subsystem from three configurations:

- A system delivered completely assembled
- The addition of a subsystem to an existing cabinet
- The expansion of an existing subsystem by the addition of one or more transport drives

MAGNETIC TAPE TRANSPORT SUBSYSTEM

The magnetic tape transport subsystem consists of a one-board controller, one formatter, and up to four magnetic tape transports. The magnetic tape controller plugs directly into the processor chassis and backplane. Power for the controller is obtained from the backplane and does not require a special power supply. See section 1 for slot assignment and restrictions.

Via the formatter installed in the first magnetic tape transport cabinet, the controller handles from one to four magnetic tape transports on a daisy chain. The following model types may be intermixed on the daisy chain:

- Magnetic tape transport, NRZI, seven-track, 25 inches per second, 556/800 bpi density
- Magnetic tape transport, NRZI, single mode, nine-track, 25 inches per second, 800 bpi density
- Magnetic tape transport, dual mode, NRZI/PE, nine-track, 50 inches per second, 1600/800 bpi density

Figure 23-1 is a block diagram of a typical magnetic tape subsystem. One or two magnetic tape transport drives may be installed in a cabinet. Figure 23-2 illustrates a maximum configuration system.

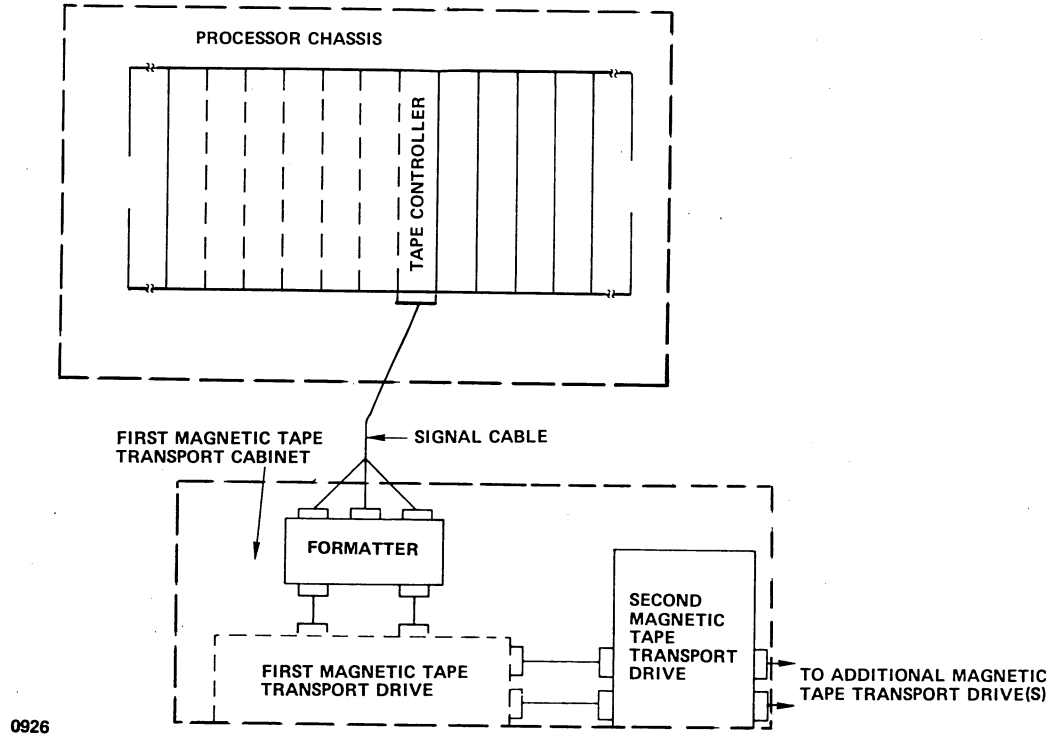

Figure 23-1. Magnetic Tape Transport Block Diagram

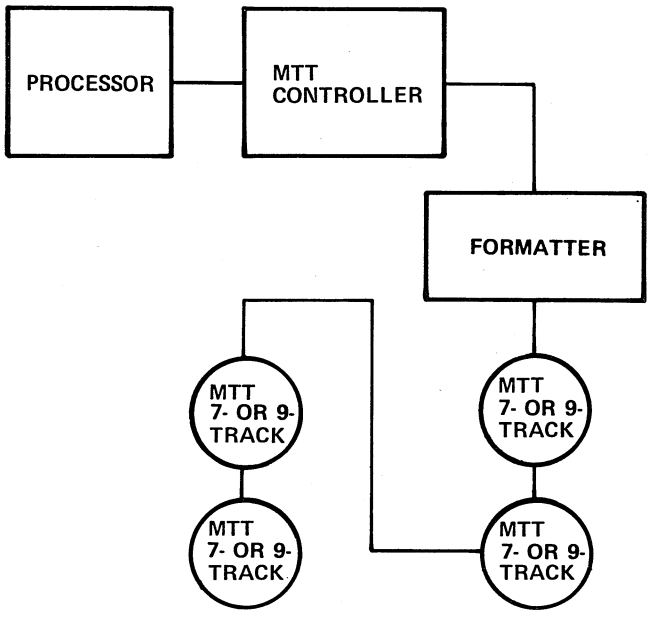

NOTES:
1. COMBINATIONS OF SEVEN-TRACK AND NINE-TRACK, NRZI/PE UNITS MAY BE USED AS LONG AS THE TOTAL NUMBER OF UNITS DOES NOT EXCEED FOUR.
2. UNIT NUMBERS MAY BE ARBITRARILY ASSIGNED TO ANY MAGNETIC TAPE TRANSPORT UNIT AS LONG AS EACH DRIVE HAS A UNIQUE NUMBER.

0927

Figure 23-2. Magnetic Tape Transport Systems Maximum Configuration

PARTS AND EQUIPMENT

Parts and Equipment	Equipment Number	Part Number
Magnetic tape transport (dual-mode, nine-track)	BW305-A	89674701
Transport-to-transport cable, 2, each 20 feet (6.1 meters)	--	95875203
Magnetic tape formatter	DZ101-A	77146201
Formatter-to-transport cable, 2, each 4 feet (1.2 meters)	--	95875204
Magnetic tape controller	FA464-A or FA465-A or FA465-B	89600612 96755059 96721469
Controller-to-formatter cable, 21.3 feet (6.5 meters)	--	89600200 or 89604657 or 96720707 or 96721485
Cabinet (single-transport system)	GH447-B or GH447-E	96750233 96730485
Finalization kit (single-transport system)	BT282-A	96756870
Cabinet (dual-transport system)	GH447-C or GH447-F	96750237 96730488
Finalization kit (dual-transport system)	BT283-A	96750247

NOTE

The magnetic tape transport equipment may be shipped in various configurations and quantities, depending on system requirements. The following equipment may be some of the supplied options.

Magnetic tape transport (NRZI, seven-track)	BW101-A	83803020
Magnetic tape transport (NRZI, nine-track)	BW303-A	83804209
Magnetic tape transport (NRZI, PE nine-track)	BW305-A	83804407
Upper transport installation kit	YA135-A	96744493
Lower transport installation kit	YA136-A	96744496
Lower door kit (dual-transport, installed)	YA104-A	96743877
Equipment cabinet	XA123-C or XA123-D	96743967 96721666
Power distribution box (installed)	XA184-E	96754359
Lower door kit (single-transport, installed)	YA102-A	96743871
Equipment cabinet finalization kit (installed)	YA159-B	96754366

TOOLS AND TEST EQUIPMENT

A roller lift or similar device is required for removing the cabinet from the shipping pallet and positioning it at the site. No special test equipment is required to install the magnetic tape transport subsystem.

UNCRATING

Cabinets shipped with the magnetic tape transport subsystem already installed are uncrated using the following procedures. Refer to figure 23-3.

1. Cut the steel banding, and remove the plywood top and cushioning pad.
2. Cut the fiber strapping that secures the outer corrugated covering.
3. Remove the corrugated covering, cushioning material, and plastic dust cover.
4. Using two roller lifts, insert the forks at the front and the rear of the cabinet.
5. Carefully lift the cabinet off the skid, and remove the skid.
6. While the cabinet is on the roller lifts, position the cabinet at its intended installation location.
7. Remove the banding and the tape surrounding the cabinet front and rear access doors.
8. Open the cabinet doors and magnetic tape transport cover doors. Remove all wood blocking supports and cushioning material, as shown in figure 23-3.

CRATING

The equipment should be crated by reversing the order of the steps in the uncrating procedure.

POWER REQUIREMENTS

The power requirements for the magnetic tape transport subsystem equipment are listed in section 1.

The magnetic tape subsystem is designed to operate from a power source with a nominal voltage of 120 V ac, single phase, 50/60 Hz. For site voltage other than this value, a power conversion transformer is required. Refer to the applicable section of this manual for installing the power conversion transformer.

POWER CABLING

Refer to figure 23-4 for details on routing and connecting the cabinet input power cord. Compare the unit name plate power rating with the available site power source before making the connection.

SIGNAL CABLING

Figure 23-4 illustrates the routing of the signal cables between the controller and the formatter. Figure 23-5 illustrates the connection of the interface cable assembly between the formatter and the magnetic tape controller in the processor chassis. The cable length from the controller to the formatter is 21.3 feet (6.5 meters). Figures 23-6 and 23-7 illustrate the connection of interface cables between the formatter and the magnetic tape transports. The length of each cable from the formatter to the first transport is 4 feet (1.2 meters). The first transport is connected to the formatter as follows:

1. Connect plug J1 of the first transport to the J1 input on the formatter backplane.
2. Connect plug J2 of the first transport to the J2 input on the formatter backplane.

The length of each cable for connecting two or more transports in a daisy-chain configuration from the first transport is 20 feet (6.1 meters). Figure 23-6 shows the connections required for daisy-chain connection to a seven-track transport. Figure 23-7 shows nine-track transport connections.

1. With the signal cable connected to the formatter backplane, place clamps around the cable, allowing cable slack between the clamp and the formatter backplane.
2. Secure the screw through the clamp into the blower support bracket, as shown in detail D of figure 23-4.

NOTE

Each magnetic tape transport is supplied with a set of transport-to-transport daisy-chain cables. If the daisy-chain cables are not required for connecting an additional transport, this set of ribbon cables should be coiled and stored in the bottom of the transport cabinet for future use.

GROUNDING

The shielded signal cable from the processor to the formatter must be connected to ground at the cabinet entry points utilizing the U-bolts provided, as shown in figure 23-4. The steps for this procedure are as follows:

1. Connect the signal cable to the processor backplane and to the backplane of the formatter via the cabinet entry points.
2. Ground the cable shield to the processor cabinet as shown in details B and C of figure 23-4.
3. Ground the cable shield to the magnetic tape transport cabinet power distribution box floor as shown in detail B of figure 23-4.

50/60 HZ CONVERSION

The magnetic tape transport is normally delivered to operate on 60 Hz. To convert the unit for 50 Hz operation, remove the perforated cover of the pneumatic regulator circuit board mounted on the rear of the vacuum motor. Locate a yellow jumper, which is normally inserted into a board jack labeled 60 Hz. Move this end of the jumper to the jack labeled 50 Hz. Replace the cover.

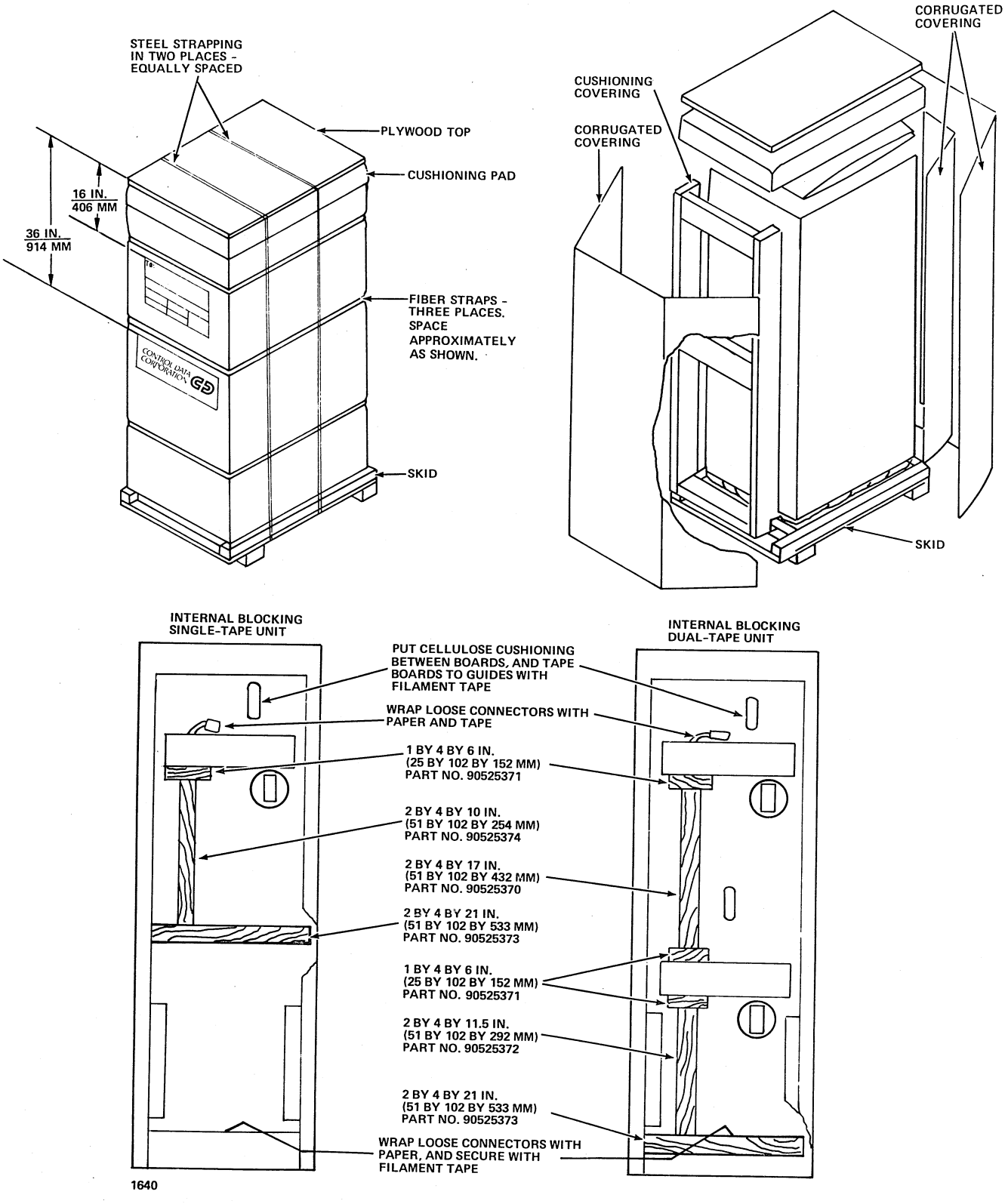

Figure 23-3. Magnetic Tape Transport Cabinet Uncrating

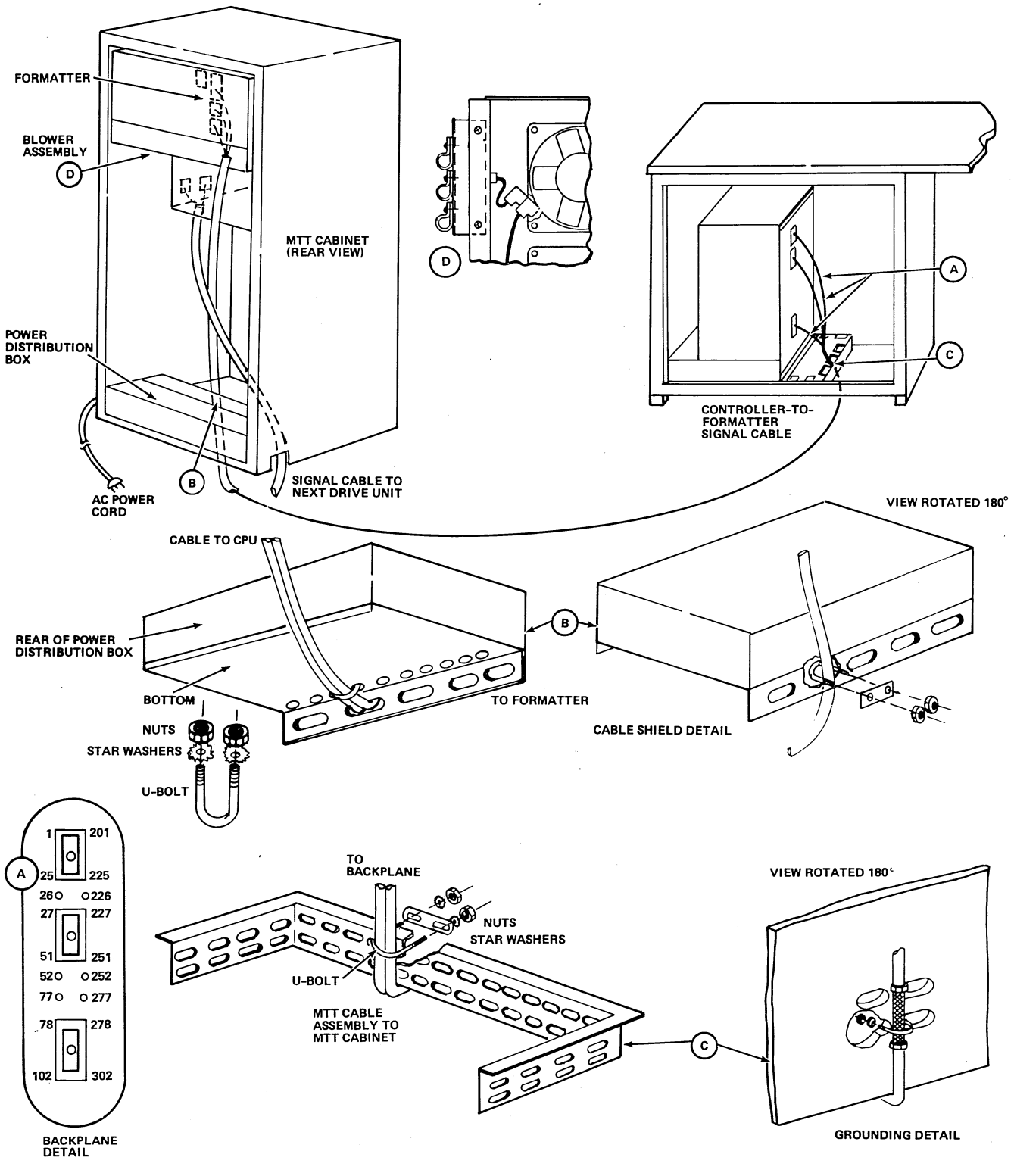

Figure 23-4. Magnetic Tape Transport Signal and Power Cabling

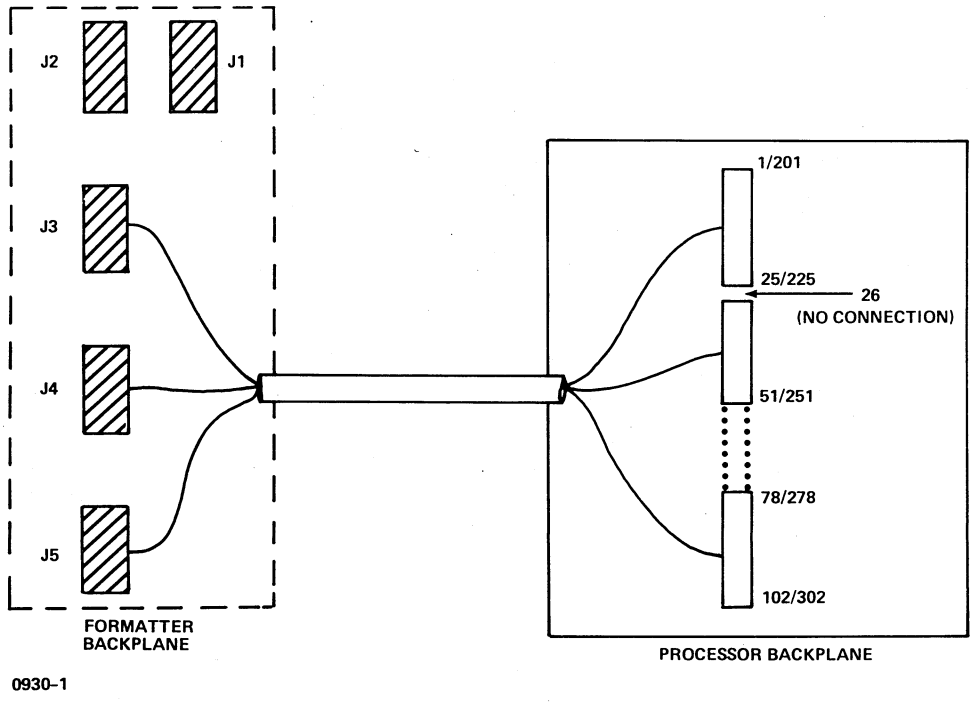

Figure 23-5. Formatter-to-Controller Cable Connections

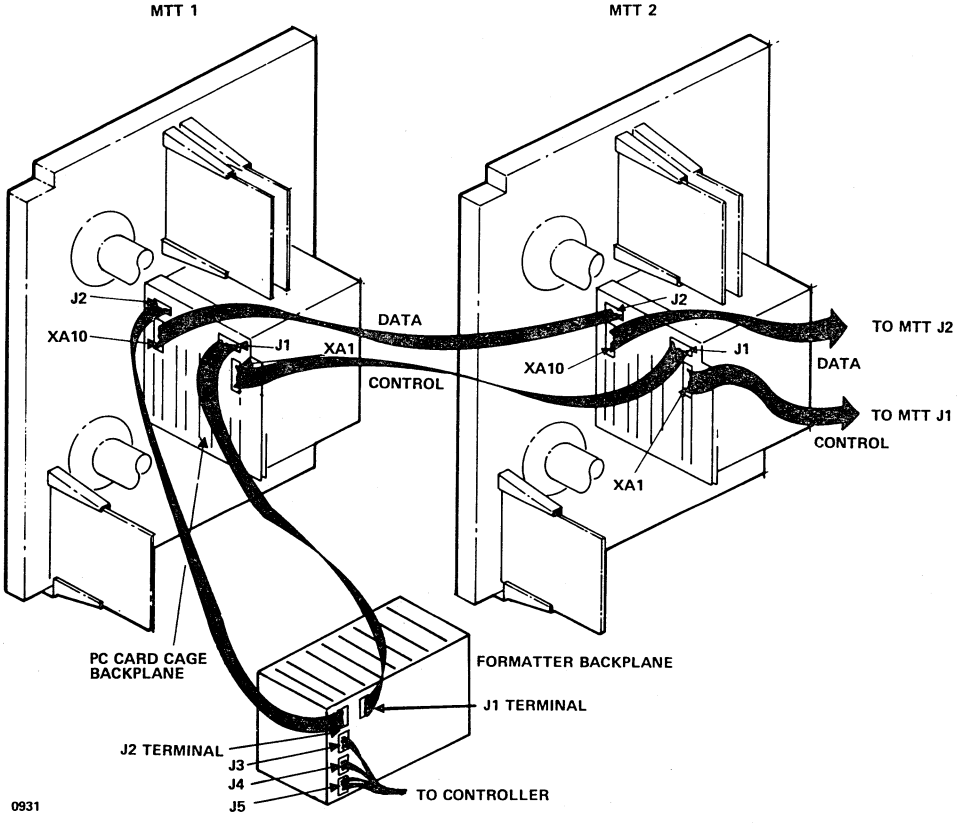

Figure 23-6. Formatter-to-Transport and Transport-to-Transport Signal Cable Connections (Seven-Track)

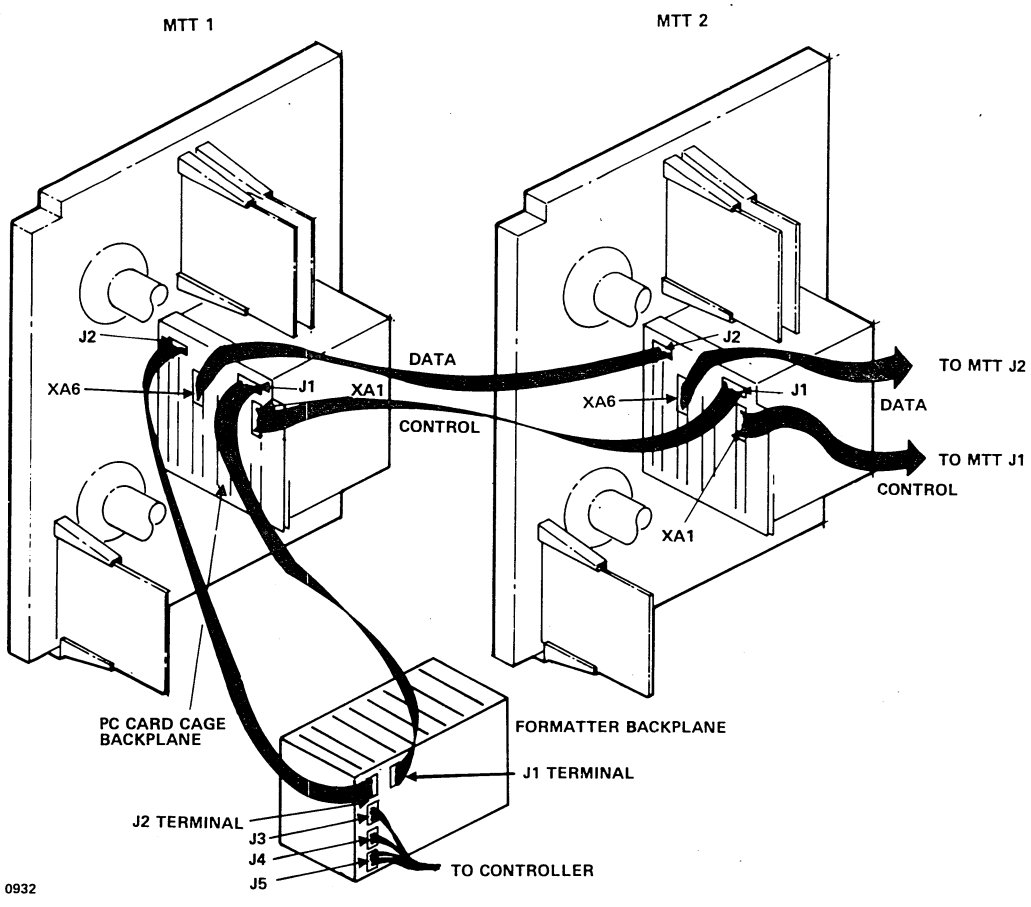

Figure 23-7. Formatter-to-Transport and Transport-to-Transport Signal Cable Connections (Nine-Track)

SWITCH/JUMPER VERIFICATION

Magnetic Tape Transport Drive

Figure 23-8 illustrates the location and the normal operating configuration of the magnetic tape transport select jumpers. When more than one magnetic tape transport is used in a system, each unit must be jumpered for a different unit select number. When only one magnetic tape transport is used in a system, it is jumpered as illustrated in figure 23-8 for unit 0. The stop jumper is normally installed on all units. Verify that this jumper is removed from its location between XA4B14 and XA4B15.

Magnetic Tape Controller

For magnetic tape controller slot assignment, refer to section 1.

Figure 23-9 illustrates the location of selection jumpers and switches on the magnetic tape controller circuit board which must be set or verified at the time of system installation. Table 23-1 defines these jumpers and switches. If the controller was shipped separately, verify the positions prior to installing the circuit board in the processor. If the controller was shipped installed in the processor, proceed as follows:

1. Open the processor cabinet side access panel.
2. Remove the chassis cover plate by turning the two captive latches on the bottom of the plate one-quarter turn counterclockwise.
3. Using the extractor tool located on the cover plate, remove the controller board from its assigned slot.

After verifying the board switches and jumpers, install the board in the chassis, ensuring that the components on the board are facing left. Apply firm thumb pressure at the upper and lower corners of the board until the board is well seated into the chassis backplane connector. Replace the chassis cover plate and processor cabinet access panel.

Interrupt Jumpers

Interrupt lines are selected by way of backplane wire connections between the magnetic tape controller card slot and the processor section of the chassis. Section 1 identifies these lines. The jumpers are factory installed and require no field action when installing the magnetic tape subsystem.

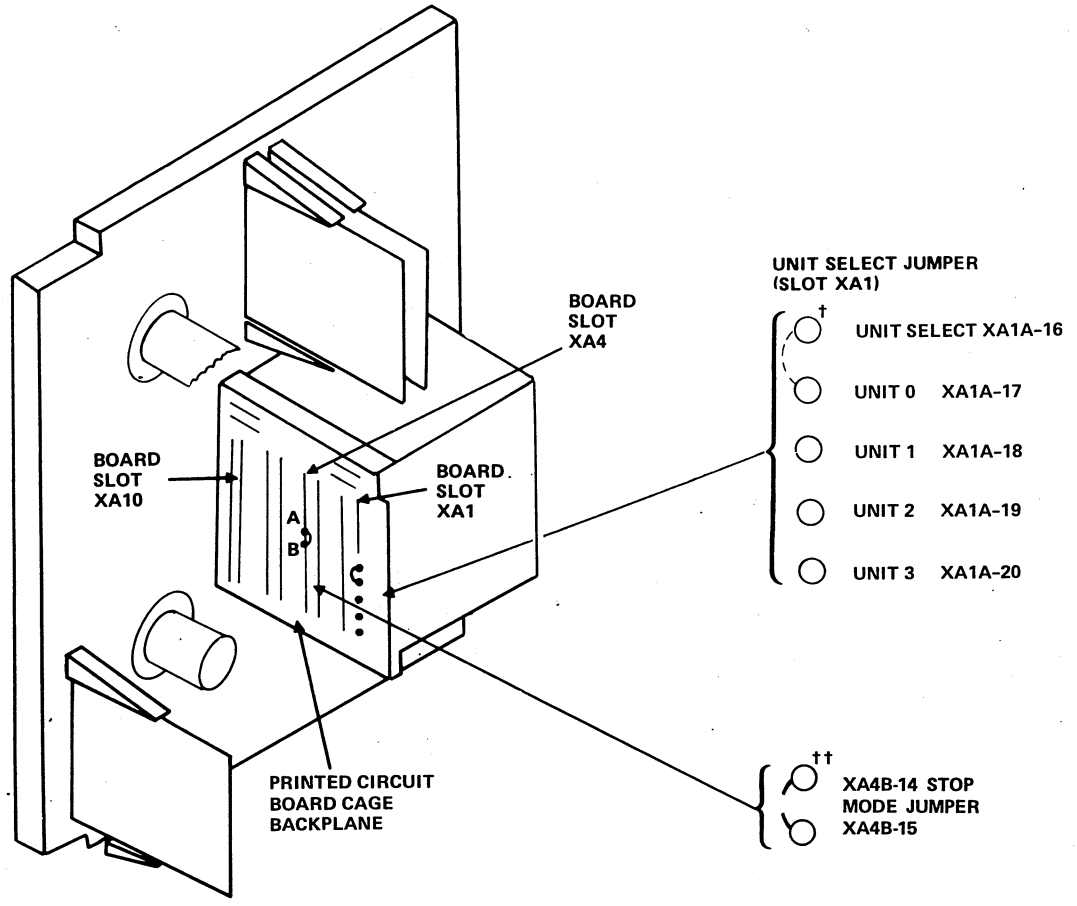

†NORMAL CONFIGURATION. TO SELECT A UNIT OTHER THAN 0, PLACE THE JUMPER BETWEEN UNIT SELECT AND THE DESIRED UNIT NUMBER.

††VERIFY THAT THE STOP MODE JUMPER IS REMOVED FROM XA4B-14 TO XA4B-15.

0882-1

Figure 23-8. Magnetic Tape Transport Unit Select and Stop Mode Jumper

Equipment Code Select

The equipment code is selected via jumpers located on the magnetic tape controller. Refer to figure 23-9 and table 23-2 to establish the proper equipment code configuration.

Unit Protect Select

Refer to table 23-3, and install the necessary jumpers to place the corresponding unit in a protected or unprotected state.

Autoload Enable

The autoload jumper enables the magnetic tape transport to be the autoload device. This feature is enabled with the jumper installed; it is normally disabled, and the jumper should be removed.

Bus Access Select

This jumper enables single- or dual-bus access. With the jumper installed, dual-bus accessing is enabled. Single-bus accessing is enabled with the jumper removed; this is the normal system configuration.

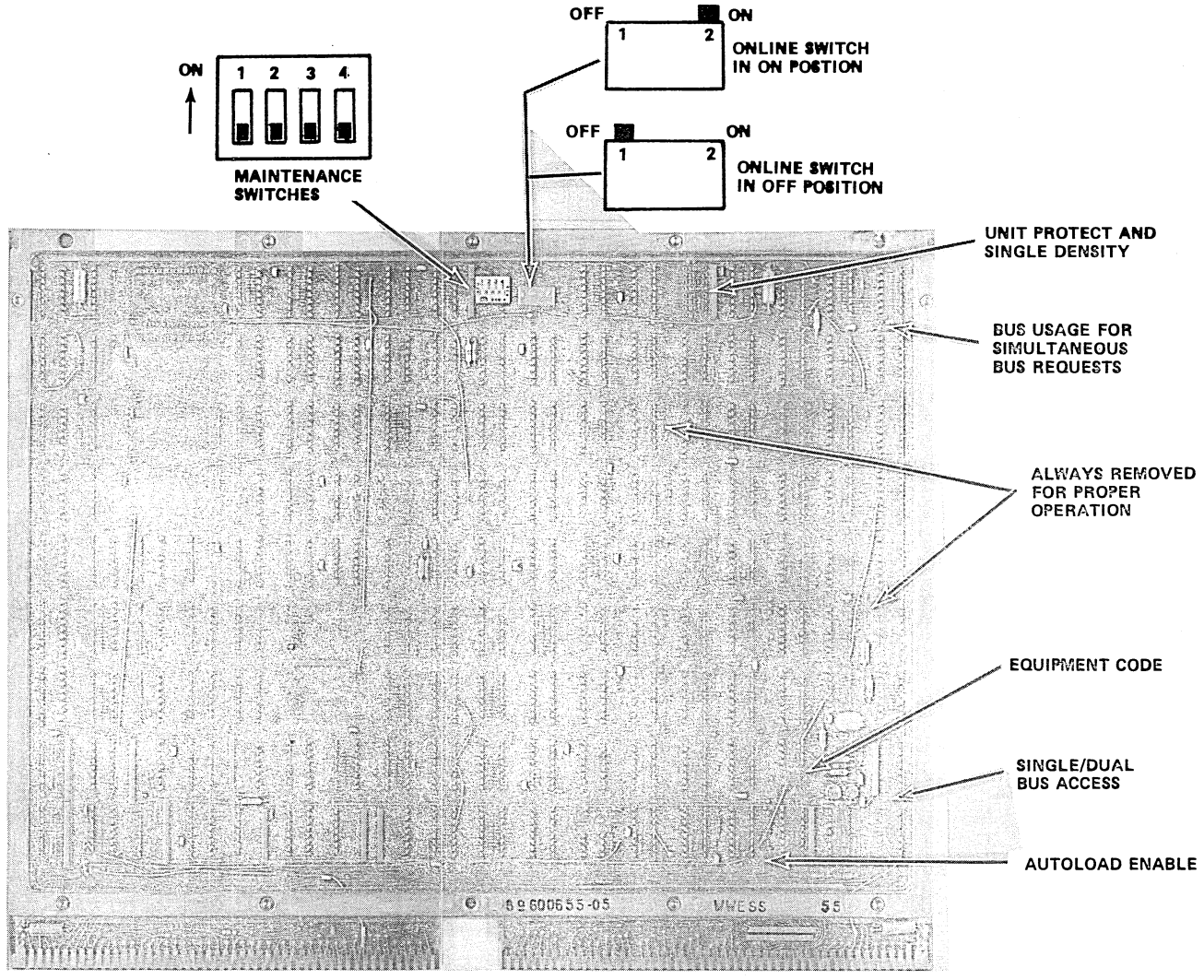

Figure 23-9. Magnetic Tape Transport Controller Switch and Jumper Locations

Bus Usage Select

The bus usage select jumper determines bus usage in the case of simultaneous bus request. The jumper is removed for normal system configuration.

Maintenance Select Switches

The online/maintenance switch (location L1) selects either normal, online operations or offline maintenance operations. This switch should always be in the ON or online position when the controller board is inserted into the processor. The maintenance switches on the slide block (location K1) select offline maintenance operations when the online/maintenance switch is in the OFF position. All of the slide switches should be in the OFF position when the controller board is inserted into the processor.

Miscellaneous Jumpers

Some of the jumper positions on the magnetic tape transport controller board have no functions in the magnetic tape subsystem. These jumpers must be removed to permit proper system operation. Their names and locations on the controller board are as follows:

TABLE 23-1. MAGNETIC TAPE TRANSPORT CONTROLLER MANUAL CONTROLS

Control Name	Position on Controller Board	Control Type	Function	Control Setting
Q10-Q7	S8	Removable jumper plug	Determines the equipment code of the controller ††	Inserted - Logic 1 Removed - Logic 0
UP0-UP3	P1	Removable jumper plug	Places the corresponding unit in a protected or unprotected state	Inserted - Unit protected Removed - Unit unprotected
SD0-SD3	P1	Removable jumper plug	Not Applicable	--
BP	U1	Removable jumper plug	Determines bus usage in case of simultaneous bus requests††	Inserted - Alternate CPU Removed - This CPU
ALD	R9	Removable jumper plug	Enables the magnetic tape transport to be the autoload device ††	Inserted - Autoload enabled Removed - Autoload disabled
SB	U8	Removable jumper plug	Single/dual bus access ††	Inserted - Dual bus Removed - Single bus
JM	P3	Removable jumper plug	Must always be removed	--
LS	L1	Slide switch	Selects either normal, online CPU operations† or offline maintenance operations. This switch should always be in the online position when the controlled board is inserted into the card slot.	OFF - Offline maintenance ON - Normal, online operations
MS1-MS4	K1	Switch block	Selects the offline maintenance operation when the line switch is in the OFF position†	--
UM1-UM4	T6	N/A	Not applicable	--

†These switches are to be used only by higher level support personnel. Ensure that the line switch is always in the ON position.

††These control settings are a part of the system configuration. When a replacement controller is to be inserted, the control settings of the replacement board should be made to match those of the removed board.

Jumper Name	Board Position
SD0 through SD3	P1
JM	P3
UM1 through UM4	T6

DIAGNOSTIC TESTING

Perform the manual operating and diagnostic checks according to the diagnostic decision logic tables (DDLTs) in the CYBER 18 Computer System hardware maintenance manual.

NOTE

The diagnostic tests and routines described in the system hardware maintenance manual can be performed only after the console display, the processor, and the flexible disk drive or the tape cassette (diagnostic load device) installations have been completed.

TABLE 23-2. EQUIPMENT CODE SELECT JUMPERS

Hex Value	Equipment Code Q Bits				Enable/Disable Jumpers ††			
	10	9	8	7	Q10	Q09	Q08	Q07
0	0	0	0	0	D	D	D	D
1	0	0	0	1	D	D	D	E
2	0	0	1	0	D	D	E	D
3	0	0	1	1	D	D	E	E
4	0	1	0	0	D	E	D	D
5	0	1	0	1	D	E	D	E
6	0	1	1	0	D	E	E	D
7	0	1	1	1	D	E	E	E
8	1	0	0	0	E	D	D	D
9	1	0	0	1	E	D	D	E
10	1	0	1	0	E	D	E	D
11	1	0	1	1	E	D	E	E
12†	1	1	0	0	E	E	D	D
13	1	1	0	1	E	E	D	E
14	1	1	1	0	E	E	E	D
15	1	1	1	1	E	E	E	E

NOTES:

† Normal position
†† D Disabled or off
E Enabled or on

TABLE 23-3. UNIT PROTECT SELECT JUMPERS

Protected Unit	Insert Jumper
Tape transport Unit 0 †	UP0
Tape transport Unit 1 †	UP1
Tape transport Unit 2 †	UP2
Tape transport Unit 3 †	UP3

† Normal position

MAGNETIC TAPE TRANSPORT DRIVE INSTALLATION

The magnetic tape transport drives (seven- or nine-track) are installed in an XA123-C equipment cabinet. The installation requires two men. One or two magnetic tape transport drives can be installed in a single cabinet. If only one drive is being installed, the installation kit provides hardware to facilitate assembly in the top half of the cabinet only.

Depending on former configurations of the cabinet, the installation kit may contain some duplicated items which will not be required. Likewise, some steps of the installation procedure may not be applicable. The parts and equipment required for the installation of the drives are included in the optional listing of equipment in the magnetic tape transport subsystem subsection. This installation includes ballast weights, cooling fans, and EMI strips.

After installing the drives into the cabinet, refer to the installation procedures for the formatter and a complete magnetic tape transport subsystem in this section to complete the installation.

TOOLS REQUIRED

The following tools are required to perform the installation.

- Drill motor, 1/4 horsepower, 1/4-inch chuck
- Drill, high-speed no. 43
- Drill, high-speed no. 36
- Tap, centering 4-40
- Tap, centering 6-32
- Tap, centering 10-32
- Tap wrench
- Spin wrench, 5/16-inch
- Screwdriver, medium Phillips
- Screwdriver, large Phillips
- Scissors, general-purpose
- Pliers, snap ring, external
- Pliers, cutting (diagonals)
- Two roller lifts

UNCRATING

Uncrate each item in the sequence that the installation procedure indicates. This ensures minimum deposits of dirt or foreign particles on the equipment.

Equipment Cabinet

1. Cut the steel banding, and remove the plywood top and cushioning pad. Refer to figure 23-3.
2. Cut the fiber strapping that secures the outer corrugated covering.
3. Remove the corrugated covering, cushioning material, and plastic dust cover.
4. Using the roller lifts, insert the forks at the front and rear of the cabinet.
5. Lift the cabinet, and position it at its intended installation location.

Magnetic Tape Transport Drive

WARNING

The unit weighs more than 100 pounds (45.4 kilograms). Uncrating requires two men to pervent personal injury.

1. Cut the container tape, and open the carton flaps. Refer to figure 23-10.
2. Remove the manual and the transport mounting hardware kit.
3. Remove the top cushion pad.
4. Remove the hold-down carton; lift straight up.

CAUTION

Removing the transport from the carton requires two men. Do not use components as lift handles.

5. With a man at each side of the carton, grasp the shipping support braces securing the transport to the wooden panel; lift the unit straight up to remove it from the carton.
6. Inspect the unit to ensure removal of all packing materials.
7. Perform visual inspection per table 23-4.

CRATING

Refer to the above uncrating instructions and figures 23-3 and 23-10 for crating the cabinet and transport.

TRANSPORT INSTALLATION

The following are step-by-step procedures for installing single and dual transports in a single cabinet.

Cabinet Preparation

Retain all items removed from the cabinet until transport installation has been completed. Some items will be re-installed in the cabinet.

Single Magnetic Tape Transport Drive

1. Unpack the cabinet, cabinet door assembly, and installation kits. Check the contents of the kits against the enclosed parts lists and figure 23-11.
2. Remove the three top horizontal channel brackets (part number 39743301) and two vertical mounting rails (part number 88974900) from each side of the cabinet interior. Do not remove the bottom horizontal channel brackets. Retain the brackets, rails, and mounting hardware for later use.
3. Select the three large strips of foam from the installation kit poylurethane package (part number 96750804). Remove the adhesive backing from the strips, one at a time; install the strips in the designated spaces. Insert the large strips between the vertical channels of the cabinet sides. Install the small strip in the frame of the cabinet rear door. Ensure that no cabling is routed between the foam strips and the cabinet side panels.

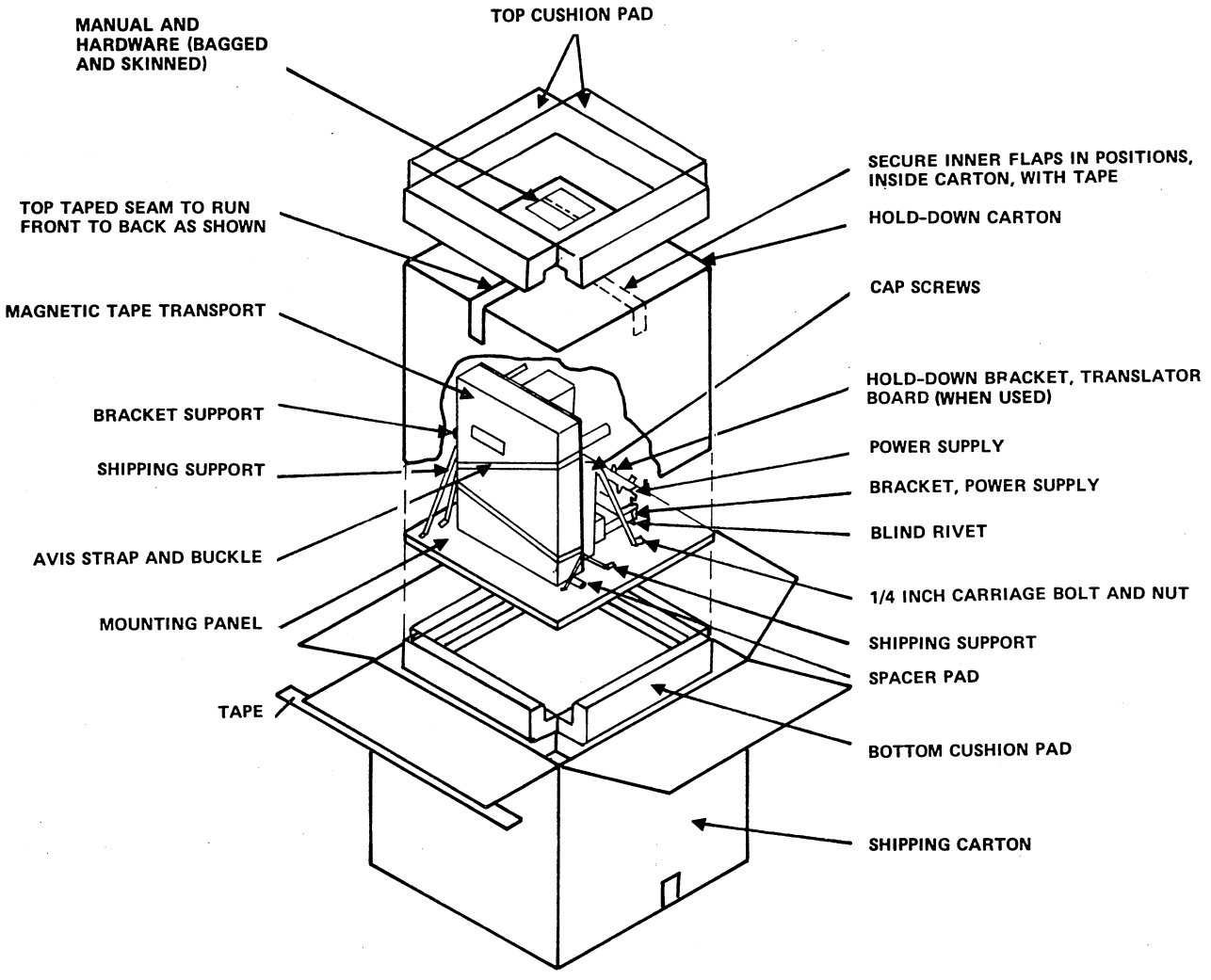

Figure 23-10. Magnetic Tape Transport Crating and Uncrating

4. Select two ballast bars (part number 39349100), two hexagon nuts (part number 10125301), and two hexagon cap screws (10126512) from the kit. Bolt the two bars together using the two center holes of the bars. Repeat this procedure for the remaining two ballast bars.

5. Select four spring nuts (part number 39005406) from the kit. Insert two of the nuts into each of the rear vertical channels at positions that coincide with the remaining holes in the ballast bars. Position the bars on the top of the bottom horizontal channels.

6. Select four hexagon cap screws (part number 10126512) from the kit. Attach the assembled ballast bars to the vertical channels using the spring nuts installed in step 5 above. Locate as shown in figure 23-11. All screw heads are to face the center of the cabinet.

7. Using the drill motor with a no. 43 drill bit, drill door latch striker plate holes at the center punch dimples that coincide with the right side of the front door latch.

8. Using a no. 36 drill bit, drill door hinge bracket holes at the center punch dimples that coincide with the left side of the front door top hinge post.

9. Using a 4-40 tap and tap wrench, thread the door latch striker plate holes.

10. Using a 6-32 tap and tap wrench, thread the door hinge bracket holes.

11. Select the door latch striker plate (part number 84927200) and two thread cutting screws (part number 36159311) from the door kit, and attach the plate to the holes prepared in step 9 above.

TABLE 23-4. TRANSPORT VISUAL INSPECTION

Item	Check and Desired Condition
Hinged deck and access door	Painted surface unmarred, no structural damage, open and close is smooth and positive
Switch lights (operators panel)	Intact and marking legible
Tape path	No visible obstructions in tape feed path and tape guides clean. No visible deformity to tape path components; all hardware firmly attached to tape deck.
Head mounting assembly	Electrical terminations properly connected; no visible damage to read/write heads
Capstan wheel	Clean, free to rotate; check by inserting screwdriver into slotted shaft. Inspect for excessive surface wear/deterioration of elastomeric surface, gashes and scratches on capstan, and oxide accumulation.
Printed circuit cards	Check chassis for visible evidence of damage; check all cards for proper seating. Check for full card complement.
Plastic/glass enclosures	Check relative transparency, glass/plastic not chipped, smoked, or cracked.
Cabling/wiring	Check for viewable continuity, badly crimped or broken leads or exposed conductors. Insulation sleeving correctly positioned; connector pins not broken, bent or shorted.
Pneumatics connections	Hose and tubing connections properly routed; no visible evidence of leaks
Fuses	Fuse elements not open; fuses properly seated within holders
Chassis ground	Unit is properly grounded.
Backplane	Pins not broken, bent, or shorted; no foreign material caught in the pins
Fiber optics	Not broken or loose

12. Using the fastener block plate (part number 96791000), two Phillips screws (part number 92748166), two spring lock washers (part number 94857903), and two flat washers (part number 93211107), attach the fastener block assembly (part number 96792200) to the top-left corner of the cabinet front frame.

13. Using six Phillips screws (part number 10127113), six spring lock washers (part number 10125803), and six flat washers (part number 10125605), attach the top horizontal support (part number 96791800) to the top-front of the cabinet.

14. Select four spring nuts (part number 39005406), and insert them in the front-left side vertical channel in positions that coincide with the holes in the left side support (part number 96791600). Using four hexagon cap screws (part number 10126502), four plain washers (part number 10125608), and four lock washers (part number 10125806), attach the left side support.

15. Select four spring nuts (part number 39005406), and insert then in the front-right side vertical channel in positions that coincide with the holes in the right side support (part number 96791500). Using four hexagon cap screws (part number 10126502), four plain washers (part number 10125608), and four lock washers (part number 10125806), attach the right side support.

16. Select the remaining four spring nuts (part number 39005406), and insert two each in the right and left vertical channels in positions that coincide with the holes in the center support (part number 96791700). Using four hexagon cap screws (part number 10126502), four plain washers (part number 10125608), and four lock washers (part number 10125806), attach the center support.

Dual Magnetic Tape Transport Drive

Cabinet preparation for a dual drive consists of complete preparation of the cabinet for a single drive and the

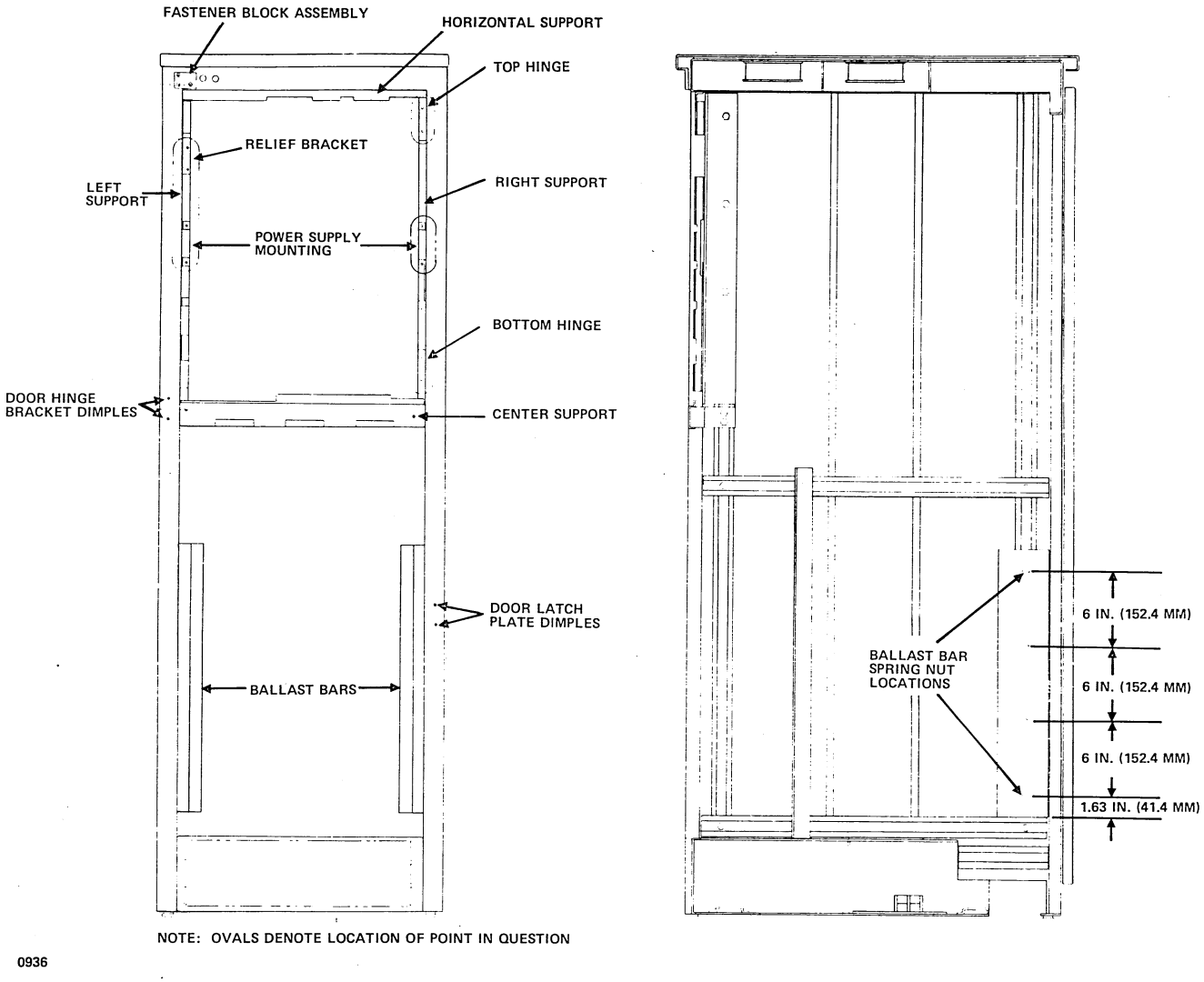

Figure 23-11. Single Unit Cabinet Preparation

following additional steps for the second drive. For installation of an add-on, second drive, only the dual-drive procedures are required.

1. Unpack the cabinet door assembly and installation kits. Check the contents of the kits against the enclosed parts list and figure 23-12.

2. If this is an add-on, second drive, perform steps 7 through 11 of the single-drive procedures for the new door. Remove the door latch striker plate previously installed with the single-drive installation.

3. Remove the center support (part number 96791700), and re-install it in the bottom-center support position shown in figure 23-12, using the removal hardware.

4. Execute steps 13 ad 14 of the single-drive preparation procedures.

5. Select four spring nuts (part number 39005406), and insert two each into the right and left vertical channels in positions that coincide with the holes in the center support (96791701). Using four hexagon cap screws (part number 10126502), four plain washers (part number 10125608), and four lock washers (part number 10125806), attach the center support to the center of the cabinet as shown in figure 23-12.

Fan Installation

1. Select the following items, in the indicated quantities, from the installation kit:

   Tubeaxial fan (part number 88912000) - 4

   Cable assembly (part number 88916120) - 4

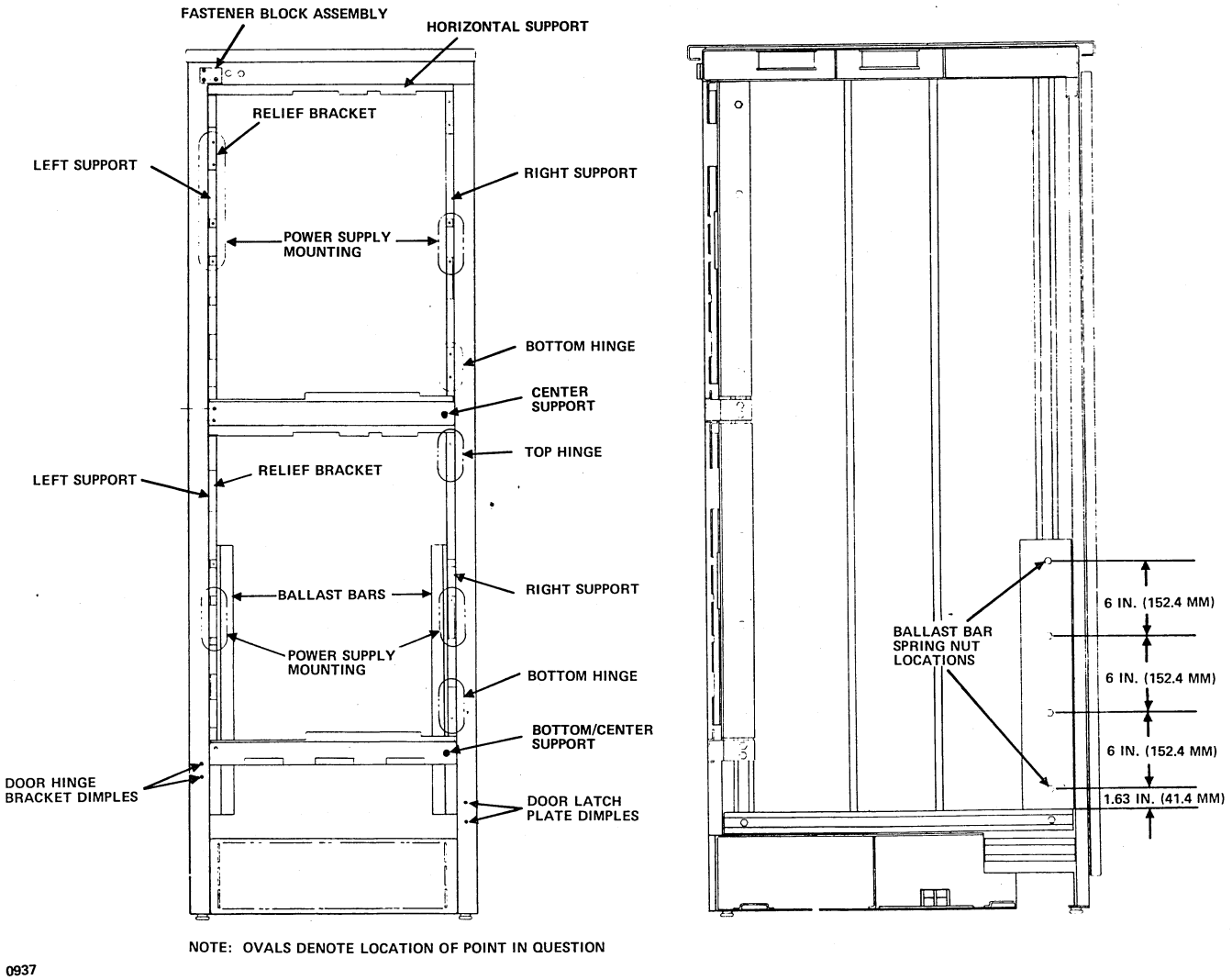

Figure 23-12. Dual Unit Cabinet Preparation

Fan cable (part number 88916110) - 1

Fan grille (part number 96748200) - 4

Faston terminal (part number 62121102) - 2

Slot screw (part number 10127343) - 16

Plain washer (part number 10125605) - 32

Lock washer (part number 10125803) - 16

Hexagon nut (part number 10125105) - 16

2. Using the selected hardware, install the four fans as illustrated in figure 23-13.

3. Connect one cable (part number 88916120) to each of the four fans. Connect the remaining cable ends together in a piggyback fashion.

4. Connect the plug of the fan cable (part number 88916110) to the fan plug piggyback arrangement. Route the open end to the left side of the cabinet and down into the power distribution box, adjacent to the over-temperature wiring harness.

5. Using the two faston terminals, connect the fan cable to the power distribution box at terminals 2 and 3. Any excess cable length may be either cut off before installing the faston terminals or retained and coiled in the cabinet floor.

Magnetic Tape Transport Preparation

Single Drive

1. Select the top-right bracket (part number 96791900), top-left bracket (part number 96792100), and the bottom bracket (part number 96792000) from the installation kit.

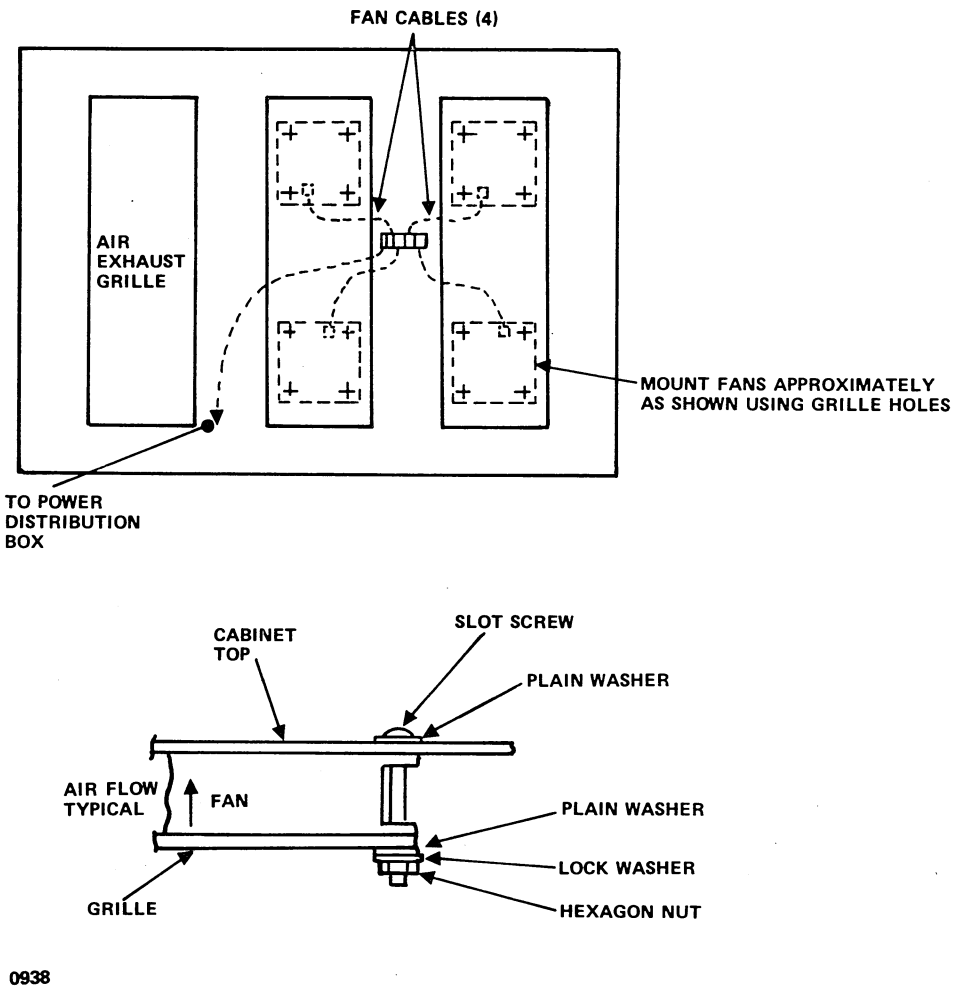

Figure 23-13. Installation of Cabinet Fans

2. Clean the bracket surfaces with solvent to remove any oil or grease residue. Place the brackets on a clean horizontal surface with the underside up.

3. Select the EMI contact strip (part number 96785600) from the installation kit. Cut the EMI contact strip into segments, as indicated in figure 23-14. Remove the protective cover from the adhesive back of each segment, and attach the segment to the brackets.

4. After all segments of the EMI strips are applied to the underside of the bracket, turn the brackets over. Place the brackets on the support to protect the EMI strips from damage. Cut and attach the segments of the EMI strip to the topside of the brackets, as indicated in figure 23-14, except for the segments that bridge the mounting holes of the brackets.

5. Remove the magnetic tape transport from the shipping container.

6. Disconnect the ground straps and cables between the transport and the power supply.

7. Remove the power supply from the transport and wooden pallet.

8. Select the stay track (part number 86734500) and two Phillips screws (part number 10125711) from the transport hardware kit, and attach the stay track to the power supply right support bracket. Ensure that the stay track slide slot is at the bottom edge of the power supply support bracket.

9. Select four cap screws (part number 10126501), four plain washers (part number 10125608), and four lock washers (part number 10125806) from the transport hardware kit. Attach the power supply to the position shown in figure 23-11 and detailed in figure 23-15.

Dual Drive

The dual drive is prepared for installation by repeating the single-drive procedures with the following exceptions:

1. In step 1 the top-right bracket, part number 96791900, is replaced by part number 96791901.

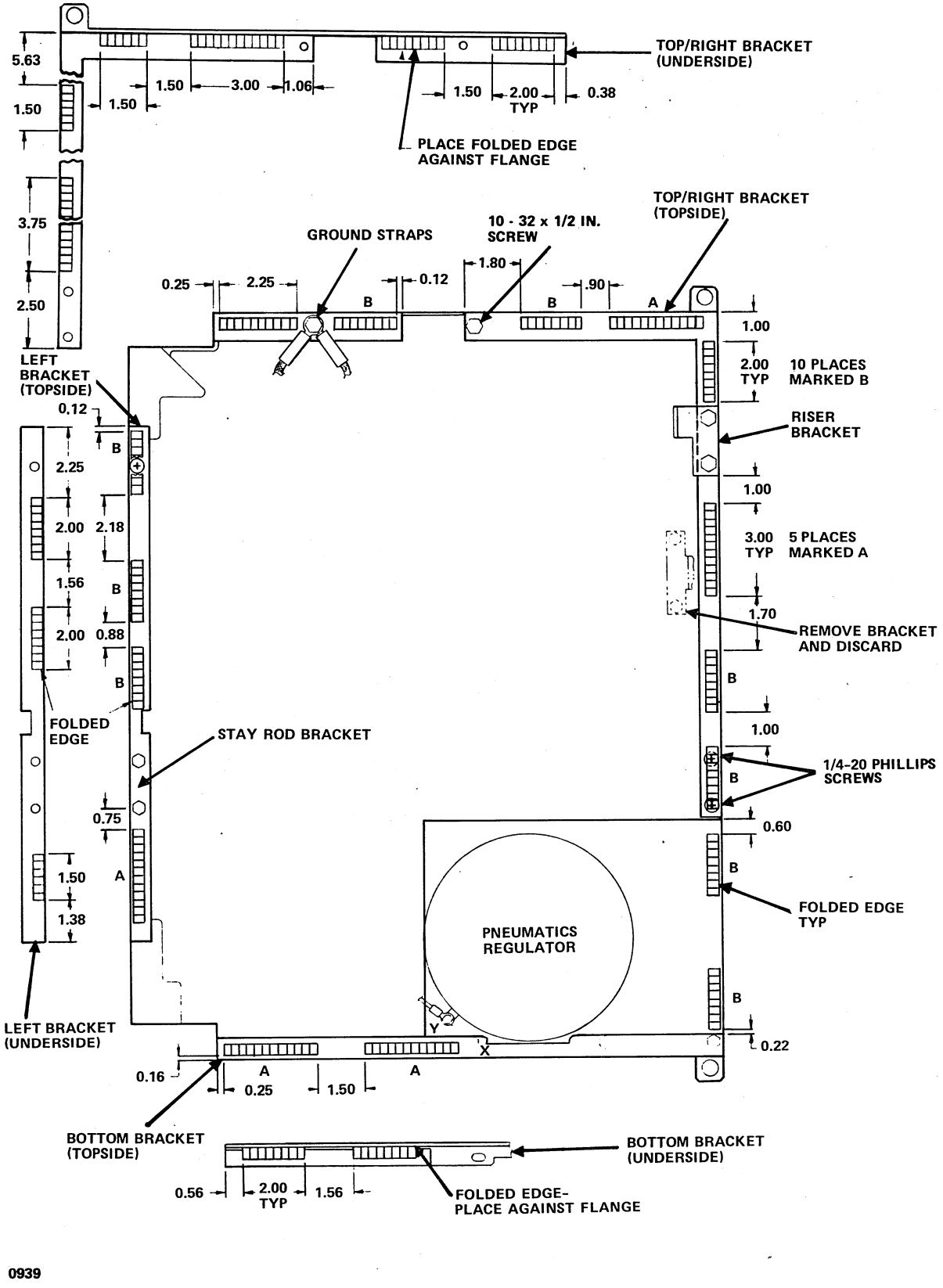

Figure 23-14. EMI Strip Application

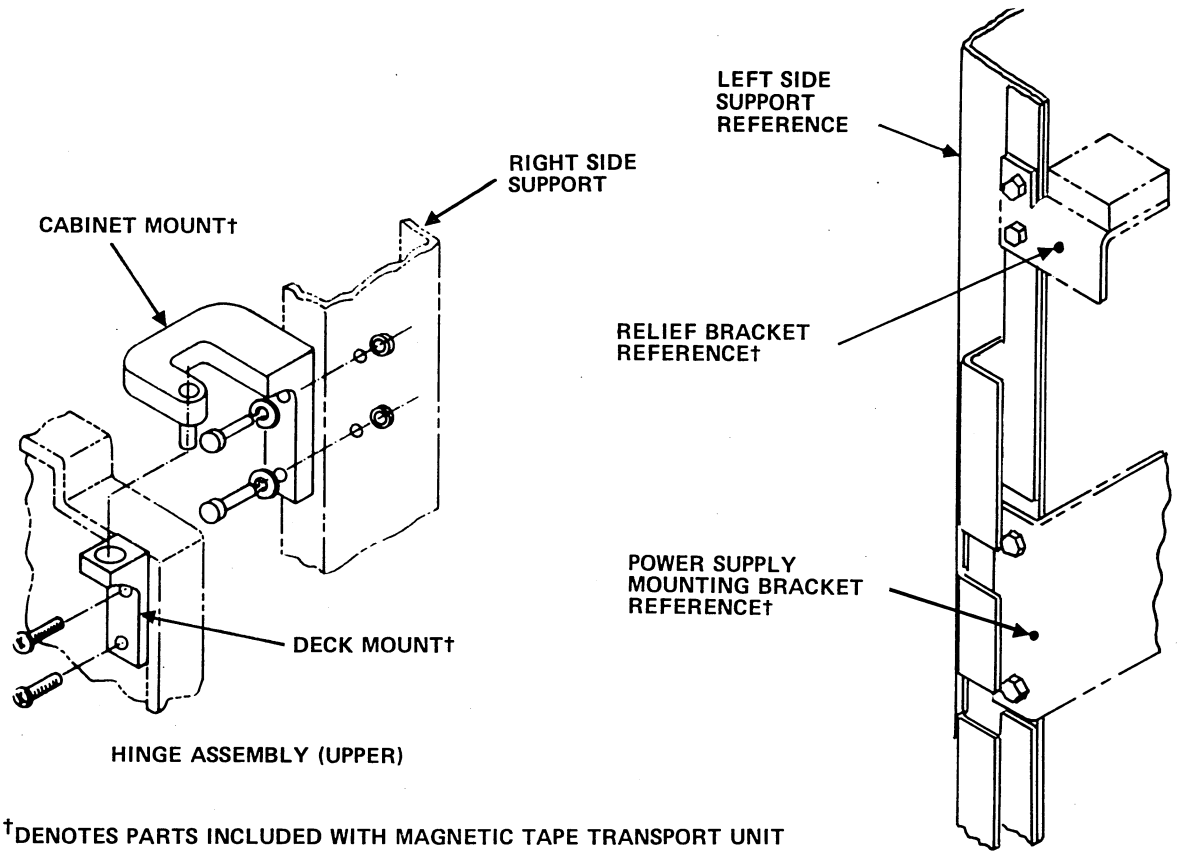

Figure 23-15. Power Supply Hinge Assembly and Relief Bracket Attachment

2. The power supply is installed in the lower portion of the cabinet, as illustrated in figure 23-12.

Magnetic Tape Transport Attachment

Following preparation of the magnetic tape transport, attachment of the transport to the cabinet is identical for single and dual installations, except for physical location. Refer to figure 23-11 for single-unit locations and figure 23-12 for dual-unit locations.

1. Select the bottom cabinet mount hinge (part number 86781402), four hexagon screws (part number 10126505), four hexagon nuts (part number 10125301), four plain washers (part number 10125608), and four lock washers (part number 10125806) from the transport hardware kit; select two shims (part number 96792400) from the installation kit. Place the shims under the hinge, and attach them to the cabinet frame at the bottom hinge location indicated in figure 23-11 or 23-12 and detailed in figure 23-15.

2. Select the top and bottom deck mount hinges (part number 86723300), and four Phillips screws (part number 93590320) from the transport hardware kit. Attach the hinges to the top and bottom positions on the right-front side of the transport, as shown in figure 23-15.

3. Select the top cabinet mount (part number 86781102), four hexagon screws (part number 10126505), four hexagon nuts (part number 10125301), four plain washers (part number 10125608), and four lock washers (part number 10125806) from the transport hardware kit; select two shims (part number 96792400) from the installation kit.

WARNING

The unit weighs more than 100 pounds (45.4 kilograms). Mounting the transport to the cabinet requires two men.

4. Remove the transport from the shipping support. Do not discard any hardware since some items will be reused.

5. Using a two-man lift effort, lift the transport up to the cabinet; mate the bottom hinge pieces. While one man supports the transport, the other man must mate the top hinge pieces and attach the shims and top cabinet mount to the cabinet, as shown in figure 23-15.

6. On the right side of the deck rear, locate and remove the screws attaching the latch bracket (part number 86704000) and the lamp bracket (part number 86736900) from the transport. Discard the latch bracket, and replace the screws to secure the lamp bracket.

7. Select the relief bracket (part number 86738500) and two hexagon screws (part number 10126505), two hexagon nuts (part number 10125301), two plain washers (10125608), and two lock washers (part number 10125806) from the transport hardware kit. Attach the bracket to the left support at the location specified in figure 23-11 or 23-12 and detailed in figure 23-15.

EMI Bracket Attachment

The EMI brackets were prepared for installation during the magnetic tape transport preparation procedures. Installation of the brackets is identical for single and dual installations except for the part number for the top-right bracket. Refer to figure 23-14 while performing the installation.

Top Right EMI Bracket

1. Using a 10-32 tap and tap wrench, thread the existing hole on the transport which coincides with the hole in the top-right EMI bracket (part number 96791900 for single installations or part number 96791901 for dual installations).

2. Remove the hexagon bolt securing the ground straps to the top of the transport deck.

3. Attach the top bracket to the transport, using the ground strap bolt with ground straps attached, two Phillips screw (part number 92960325), and one hexagon screw (part number 93592430).

4. Attach the EMI strip that bridges the Phillips screws. Also add the EMI strips to the right edge of the pneumatics regulator bracket.

5. Select the riser bracket (part number 86738200), two hexagon screws (part number 93592316), two plain washers (part number 10125608), and two lock washers (part number 10125806) from the transport hardware kit. Attach the bracket to the transport deck as illustrated in figure 23-14.

Left EMI Bracket

1. Select the prepared left EMI bracket (part number 96792100) and one Phillips screw (part number 92960325). Attach the top end of the bracket to the left side of the transport deck.

2. Select the stay rod bracket (part number 86734600), two hexagon screws (part number 10126501), two plain washers (part number 10125608), and two lock washers (part number 10125806) from the transport hardware kit. Attach the stay rod bracket and lower section of the left EMI bracket to the transport, as shown in figures 23-14 and 23-16.

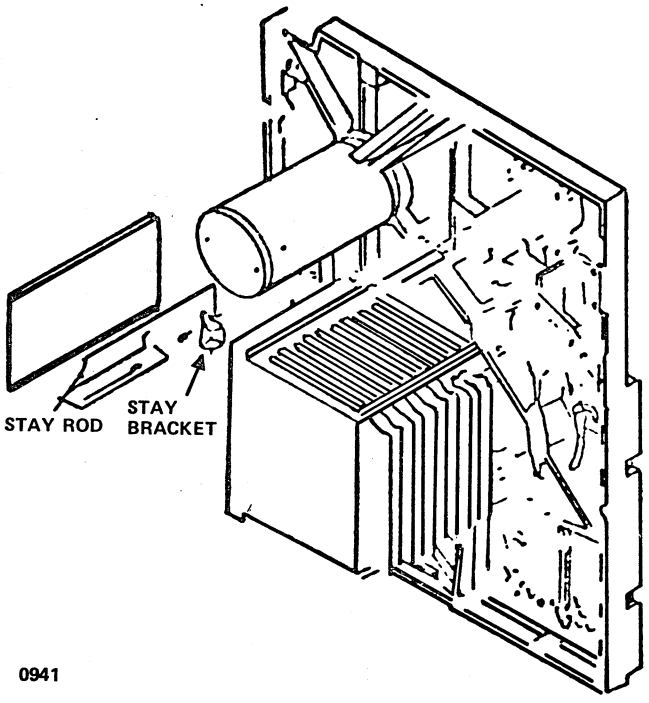

Figure 23-16. Magnetic Tape Stay Rod and Bracket Installation

3. Add the EMI strip that bridges the Phillips screw.

Bottom EMI Bracket

1. Remove the three screws and ground wire from the bottom edge of the pneumatics regulator bracket. Retain the screws.

2. Relocate the ground wire to the pneumatics regulator cover lower-left attaching screw, as shown in figure 23-14.

3. Attach the bottom EMI bracket (part number 96792000) to the transport deck using the three screws removed in step 1 above.

FRONT DOOR INSTALLATION

Hardware required for installation of the front door is contained in the door installation kit.

1. Select the door latch assembly (part number 96744028), and attach it to the door right edge using two Phillips screws (part number 10125703).

2. Select the emblem assembly (part number 15000601) and product emblem (part number 39278200). Remove the protective backing from the product emblem, and apply the emblem to the right side of the emblem assembly. Remove the two pins from the back of the emblem assembly with a sharp knife. Remove the protective backing; attach the emblem assembly to the door, as shown in figure 23-17.

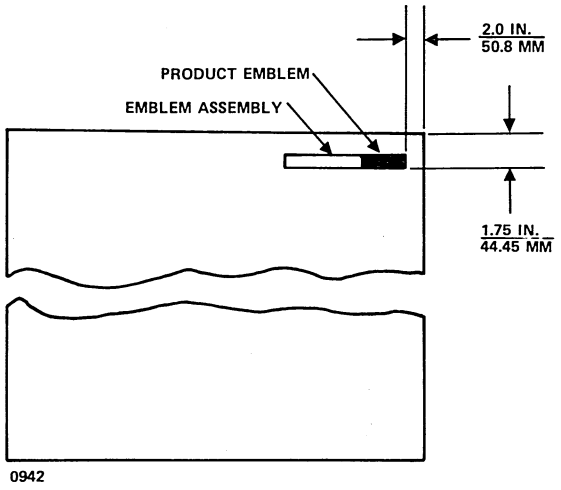

Figure 23-17. Product Emblem Location

3. Select the upper strike hinge assembly (part number 96718601) and two pop rivets (part number 09031002). Attach the hinge assembly to the door top-left inside channel.

4. On doors which do not have a pre-installed hinge pin in the lower-left channel, install another strike hinge assembly (part number 96718600) to that position using two pop rivets (part number 09031002).

5. Install the remaining piece of polyurethane foam (part number 96750804) from the installation kit to the inside of the door. For dual magnetic tape transport installations, cut the foam to 21-1/4 by 7-3/4 inches (514.35 by 196.85 mm).

6. Using two Phillips screws (part number 10127114), install one angle (part number 96744030) to the predrilled lower door hinge holes with the flange facing upward.

7. Using two Phillips screws (part number 1027114 or 17901509), install the remaining angle (part number 96744030 or 96743998) to the predrilled upper hinge holes with the flange facing downward.

8. Position one nylon washer (part number 84719800) on the top and one on the bottom strike hinge assembly bolts, and mate the door to the angles.

9. Cut 3-inch segments of the EMI contact strip (part number 96785600); apply them, three inches apart, around the door inside flange. Ensure that the strips are positioned on the flange so that contact is made with the stainless steel strip on the cabinet.

10. Adjust the door latch for proper door closure.

FINAL PREPARATION

The following procedures must be performed for each transport installed.

1. Select the stay rod (part number 86735000), nylon washer (part number 93564001), and retaining ring (part number 92033059) from the transport hardware kit. Slide the nylon washer onto the long end of the stay rod.

2. With the transport partially open, insert the long end of the stay rod, with the ends pointing down, into the stay bracket on the transport deck; insert the short end into the stay track on the power supply, as shown in figure 23-16.

3. Using shims (part numbers 86738801 and 86738802), the nylon pad (part number 86738600), and two Phillips screws (part number 10125719) from the transport hardware kit, adjust the relief bracket thickness (figure 23-15) to align the transport captive screws with the threads in the top and center or bottom supports when the transport is closed to the cabinet. Attach the nylon pad and shims to the relief bracket, with the nylon pad as the uppermost surface.

4. Connect the power cable (part number 96728100) to the transport power supply via the attached connector.

5. Route the free end of the cable along the base of the power supply to the cabinet left side, and then to the rear, joining the fans and temperature wiring harnesses and continuing down the cabinet corner to the power distribution box.

6. Attach one faston terminal (part number 62121102) to each wire.

7. Route the wires into the power distribution box, and connect as follows:

   a. Green wire to terminal 4 (protective ground)
   b. Black wire to terminal 5 (line)
   c. White wire to terminal 6 (neutral)

8. Using cable straps, secure all newly installed wiring to the cabinet.

9. Reconnect the braided ground wire from the transport deck to the transport power supply frame.

10. Observing the color codes of the cables, reconnect the three cable assemblies between the transport card cage and the transport power supply.

11. Affix the UL convenience outlets label (part number 96750810) to the lower-right side of the cabinet above the cable entry point.

12. Affix the product and FCO labels to the locations specified in section 2.

All remaining parts from the installation kits and any parts removed and not reinstalled are excess and not required for transport installation. These items may be scraped or disposed of in a suitable manner. After completing the transport installation procedures, execute the formatter installation procedures which follow before connecting the cabinet to the site power source. After installing the formatter, complete the installation by executing the magnetic tape subsystem installation procedures at the beginning of this section.

MAGNETIC TAPE FORMATTER INSTALLATION

The magnetic tape formatter allows operation of both NRZI and phase-encoded (PE) magnetic tape transports in the same subsystem. The formatter replaces the translator board used in the NRZI subsystems only. The installation requirements for the formatter are detailed in this subsection.

PARTS AND EQUIPMENT

Parts and Equipment	Equipment Number	Part Number
Magnetic tape formatter	DZ101-A	77146201
Formatter-to-transport cable, 2, each 4 feet (1.2 meters)	--	95875204
Finalization kit (single-transport)	--	96756870
or		
Finalization kit (dual-transport)	--	96750247

TOOLS REQUIRED

One each of the following tools is required to perform the formatter installation.

- Screwdriver, medium Phillips
- Scissors, general-purpose
- Pliers, cutting (diagonals)
- Spin wrench, 5/16-inch
- Spin wrench, 1/2-inch
- Tool, crimp-terminal

UNCRATING

To uncrate the formatter and prepare it for installation, execute the following step-by-step procedures in conjunction with figure 23-18. Uncrate each item in the sequence that the installation procedure indicates to ensure minimum deposits of dirt or foreign particles on the equipment.

1. Cut the tape down the middle of the carton, and open the covers.
2. Remove the top cushion.
3. Remove the front panel by lifting straight up and sliding it out from the side cushion slots. The formatter mounting hardware is contained in a bag taped to the front panel.

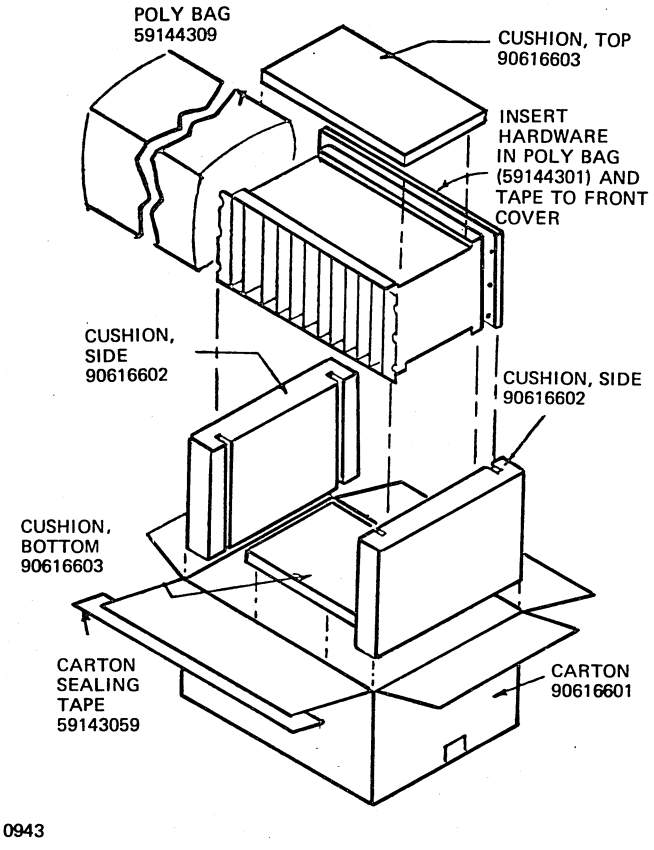

Figure 23-18. Formatter Crating and Uncrating

4. Remove the chassis from the carton by sliding it straight up and out from the side cushion slots.
5. Remove the bag from the chassis.
6. Perform a visual inspection of the formatter as specified in table 23-5.

All shipping material should be stored for possible reshipment of the unit.

CRATING

To crate the formatter, refer to figure 23-18 and reverse the steps of the uncrating procedure.

POWER REQUIREMENTS

The formatter and cage cooling fans must be connected to a 110-115 V ac, 50/60 Hz power source. Cabling is provided with each unit for connection to the power distribution box of the equipment cabinet. For power consumption values, refer to the tables in section 1.

TABLE 23-5. FORMATTER VISUAL INSPECTION

Item	Check and Desired Condition
1. Front panel and chassis	Painted surface unmarred; no structural damage
2. Switch-light (front panel)	Intact and marking legible
3. Printed circuit cards	Check chassis for visible evidence of damage. Check all cards for proper seating. Check for a full card complement.
4. Cabling/wiring	Check for: viewable continuity; badly crimped or broken leads, or exposed conductors, insulation sleeving correctly positioned; connector pins not broken, bent, or shorted.
5. Fuse	Fuse element not open. Fuse properly seated within holder.
6. Chassis ground	Unit properly grounded
7. Backplane	Pins not broken, bent, or shorted. No foreign material caught in the pins.

INSTALLATION

The formatter is installed in the vertical cabinet by utilizing the hardware received with the unit and contained in the finalization kit.

CABINET PREPARATION

Refer to figure 23-19 for assistance with installing the formatter.

1. Unpack the formatter and installation kits. Check the contents of the kits against the enclosed packing lists.

2. Remove the top two horizontal channel brackets (part number 39743301) and vertical mounting rails (part number 88974900) from the interior of each side of the cabinet if these items have been installed.

3. Insert two spring nuts (part number 39005406) into each of the rear vertical channels at positions that coincide with the holes in the mounting angle (part number 88951304). Position the mounting angle on the top edge of the cabinet rear door frame.

4. Using two hexagon screws (part number 10126501) and two lock washers (part number 10125806), attach one mounting angle (part number 88951304) to each of the rear vertical channels. Ensure that the mounting angle aligns with the top edge of the cabinet rear door frame.

Formatter Installation

1. Uncrate the formatter. Install the formatter into the cabinet on the mounting angles using six Phillips screws (part number 10127143), six plain washers (part number 10125607), and six lock washers (part number 10125805). Ensure that the top of the formatter aligns with the top edge of the cabinet rear door frame.

2. Select the cable support bracket (part number 96750639) from the installation kit.

3. Using thread roll screws (part number 96744973), attach three nylon cable clamps (part number 24565009) to the outside of the support bracket, as shown in figure 23-20.

4. As shown in figure 23-20, attach the support bracket, with the cable clamps attached, to the front frame of the blower assembly (part number 89951303) using two thread roll screws (part number 96744973).

5. Using four Phillips screws (part number 10127143), four plain washers (part number 10125607), and four lock washers (part number 10125805), install the blower assembly, with the attached bracket and clamps, onto the mounting angle direclty below the formatter. Orient the blower assembly so that the power cord is on the right side and facing forward as viewed from the rear of the cabinet.

Power Cabling

1. Select the power cable assembly (part number 96728101) from the finalization kit. Using the crimp tool, attach one terminal to each wire of the cable assembly open end.

2. Attach the cable connector to the receptacle on the formatter power supply (figure 23-21). Align the crescent prongs of the socket with the slits in the plug, push the plug firmly against the backplane, and twist the plug clockwise until it locks into position.

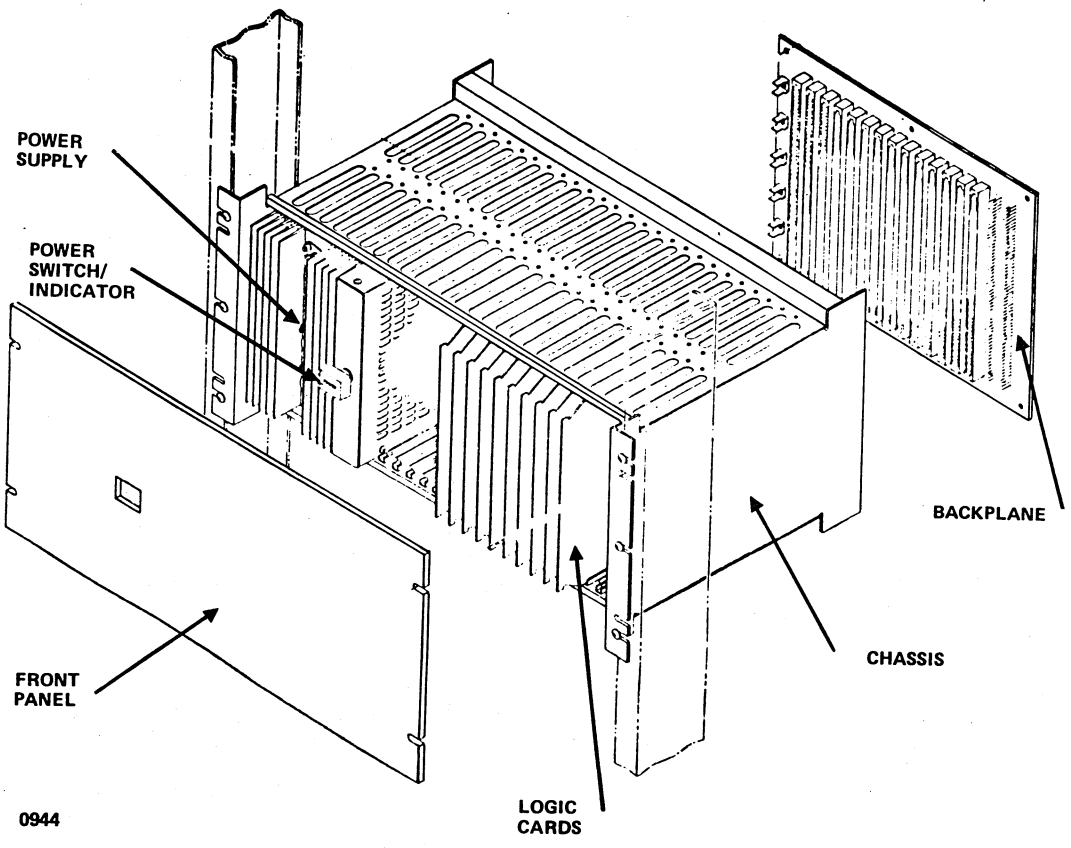

Figure 23-19. Formatter Installation

3. Route the cable down the cabinet side to the floor and right to the power distribution box power cable entry cutouts.
4. Remove the cover from the power distribution box.
5. Insert the cable leads through any of the four connector cutouts, and attach them to the power terminals in the following order:
   a. Green wire to terminal 1 or 4 (positive ground)
   b. Black wire to terminal 2 or 5 (line)
   c. White wire to terminal 3 or 6 (neutral)
6. Route the blower assembly power cord down the side of the cabinet to the power distribution box power cable entry cutouts.
7. Insert the leads through any cutout, and attach them to terminals five and six as indicated on the tab labels.
8. Reinstall the power distribution box cover.
9. Using cable strips, secure the newly installed power cables to the cabinet.

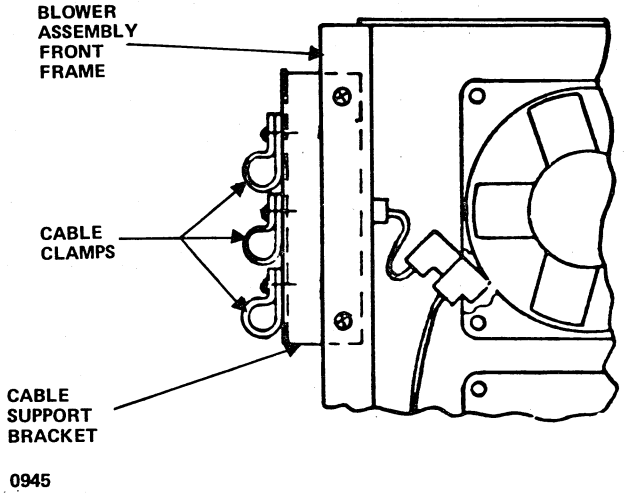

Figure 23-20. Cable Support Bracket Installation

Jumper Verification

Ensure that the jumpers identified in table 23-6 are appropriately removed or installed for the proper system configuration. The pins specified in table 23-6 may require installation of a jumper to ground. Ground can be found on pins 1 and 56 of the backplane. The parity jumper is on the WRITE control circuit card (slot XA-20). The jumper should be installed at jumper position W2 (identified by engraved letters on the circuit card). The remaining jumpers are located on the respective backplane pins at slots XA19, XA21, and XA22 per table 23-6 and mut be verified as not installed for CYBER 18 configurations.

After verifying the jumpers, ensure that the printed circuit boards and power supply wiring are securely in place. Noting the opening in the front panel for the power switch, install the formatter front panel over the chassis using the four Phillips screws and plastic washers from the formatter hardware kit.

Label Attachment

Install the product and FCO log labels to the locations specified in the label tables in section 2.

DIAGNOSTIC TESTING

After install the formatter, refer to the magnetic tape subsystem installation procedures earlier in this section for installing the signal cables and controller. Once the subsystem procedures have been completed, the diagnostic test may be performed.

NOTE

The diagnostic tests and routines can only be performed after the console display, the processor, and the flexible disk drive or the tape cassette (diagnostic load device) installations have been completed.

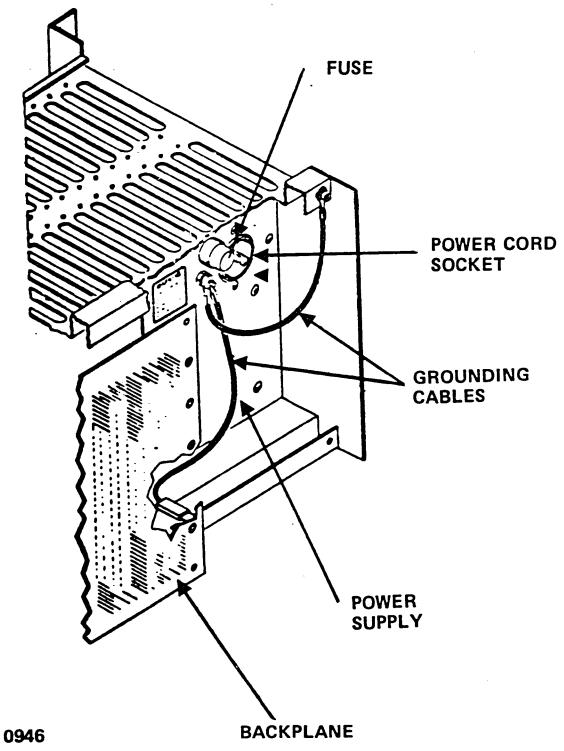

Figure 23-21. Power Cord Connection

TABLE 23-6. FORMATTER JUMPERS

Function	Pin Location	Results
Parity	XA20-W1 XA20-W2	Formatter generates parity bit. External generation of parity bit.†
Density select	XA21-55A	No jumper selects 800/556 bpi or 1600/800 bpi.† Jumper to ground selects 556/200 bpi.
Formatter address	XA22-22A	No jumper = Address 0† Jumper to ground = Address 1
Short record	XA19-22A	No jumper allows records of 16 characters or less.† Jumper to ground considers these records as noise and continues search for records greater than 16 characters.

†Normal CYBER 18 configuration

NOTE: Ground can be found at pins 1 and 56 of the backplane

The synchronous data link control (SDLC) communication line adapter (CLA) is a one-board device that is inserted into an A/Q-DMA board slot in the processor chassis (figure 24-1). Refer to section 1 for specific slot assignments. Optional local link couplers (LLCs) are available for connecting either channel of the CLA to a multidrop communication network via coaxial cables. These opto-isolated couplers consist of a printed wiring assembly mounted inside the processor cabinet on the RS232-C input/output connector panel. All cables from the I/O connector panel to external devices must be supplied by the customer. The extension coaxial cables between CPUs using the local link couplers must also be supplied by the customer. Refer to the appropriate drawings for recommended fabrication procedures involving the coaxial cables. (See drawing number 96754825/38.)

PARTS AND EQUIPMENT

Parts and Equipment	Equipment Number	Part Number
Synchronous data link control communication line adapter	FJ129-A	96753797
SDLC CLA printed wiring assembly	--	90460884
Cable assembly, SDLC CLA-to-I/O connector panel (modem), 4 feet (1.2 meters), two each	--	96752281
Cable assembly, SDLC CLA-to-I/O connector panel (automatic calling unit), 4 feet (1.2 meters)	--	96752282
Local link coupler, channel 1	FV678-A	96752827
Local link coupler printed wiring assembly	--	96752167
Cable assembly, SDLC CLA-to-channel-1 coupler, 4 feet (1.2 meters)	--	96752527
Cable assembly, SDLC CLA CPU to CPU, 50 feet (15 meters)	--	96754843
Local link coupler, channel 2	FV678-B	96752832
Local link coupler printed wiring assembly	--	96752167
Cable assembly, SDLC CLA-to-channel-2 coupler, 4 feet (1.2 meters)	--	96752528
Cable assembly, SDLC CLA CPU to CPU 50 feet (15 meters)	--	96754843
Jumper, SDLC CLA interrupt, 9 inches (152 millimeters)	--	96752671
Synchronous data link control communication line adapter	FJ448-A	88951925
SDLC CLA printed wiring assembly	--	90460884
Wire, white, AWG-30, 5 feet (1.5 meters) (for backplane wiring changes)	--	15006509

TOOLS AND TEST EQUIPMENT

No special test equipment is required to install the SDLC CLA or its associated equipment. If backplane wires (described later in this section) must be added or modified, the following special tools are required:

Tool	Part Number
Wire unwrap tool	12259138
Wire wrap tool	12263210

UNCRATING

The SDLC CLA printed wiring assembly, local link couplers, and cables are shipped installed in the processor or packed into a heavy-duty cardboard carton. If the equipment is received installed in the processor, refer to section 2 for uncrating procedures. If the equipment is shipped in a cardboard carton, it is buffered from shock and impact damage by industrial filler. No special instructions are required to remove the SDLC CLA and associated equipment from the carton.

CRATING

Refer to the above uncrating instructions for crating the units.

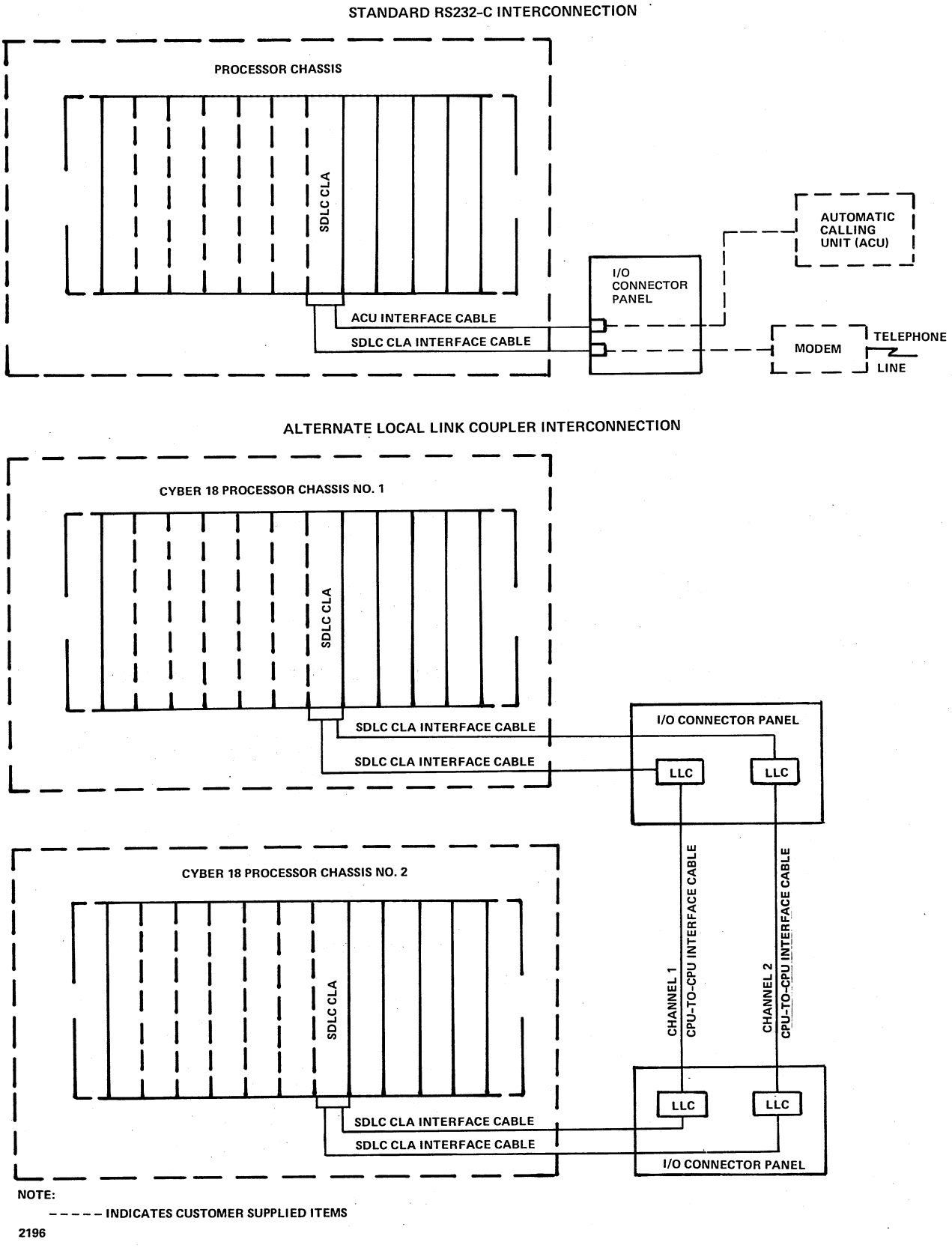

Figure 24-1. SDLC CLA Block Diagrams

INSPECTION

Inspect the SDLC CLA, cables, and coupler as follows:

1. Remove the items from the shipping carton, and check for obvious damage.
2. Check the contents of each carton against the packing list.
3. Examine all connector plugs for possible bent, missing, or broken pieces.
4. Inspect all cables for damage to insulation and security of connectors.
5. Inspect for physical damage to the printed wiring assemblies.

POWER REQUIREMENTS

The SDLC CLA receives +5 V dc and ±12 V dc from the processor dc power supply by connection to the assigned backplane slot position. The slot position assigned to the SDLC CLA printed wiring assembly is a function of the system application. The local link couplers receive +5 V dc and ±12 V dc from the applicable channel of the SDLC CLA through connection of the CLA-to-coupler signal cable at the processor backplane.

CPU BACKPLANE WIRING

For proper operation of the process mode the SDLC CLA requires connection of some signals on the processor backplane that are not normally installed. Inspect the backplane for wiring of the signals listed in table 24-1. If they are not already installed, use the wire wrap tool to install the wiring between the backplane slots and the card slot that the SDLC CLA printed wring assembly is to occupy. If the SDLC CLA is to be installed in slot G, one wire (ENPRT SYS.) must be deleted.

INTERRUPT JUMPERS

INTERRUPT TO PROCESSOR

The processor macro interrupt (normally INT15) must be connected to the SDLC CLA pin 249.

MULTIPLE SDLC CLAS

A maximum of four SDLC CLA units can be installed in one CPU. The following interrupt jumpers must be installed to tie the units to one common interrupt line:

- CLA unit 1 pin 49 to CLA unit 1 pin 250
- CLA unit 1 pin 44 to CLA unit 2 pin 250
- CLA unit 1 pin 43 to CLA unit 3 pin 250
- CLA unit 1 pin 40 to CLA unit 4 pin 250

TABLE 24-1. CPU BACKPLANE WIRE CHANGES

Signal	SDLC CLA Slot Pin	To Slot/Pin
SETSM204/	21	K/273
DSDATA/	41	K/248
DSUARTCLK	42	K/206
RS232OUT1	251	K/249
MCS/ (EXMC/)	294	K/74
ALSWNO/	298	H/42
ENPRT SYS. (delete wire)	G/293	H/293

SIGNAL CABLING

The SDLC CLA is supplied with two modem interface cables and one automatic calling unit (ACU) interface cable that must be connected to the backplane as shown in figure 24-2. These cables interface the CLA to the

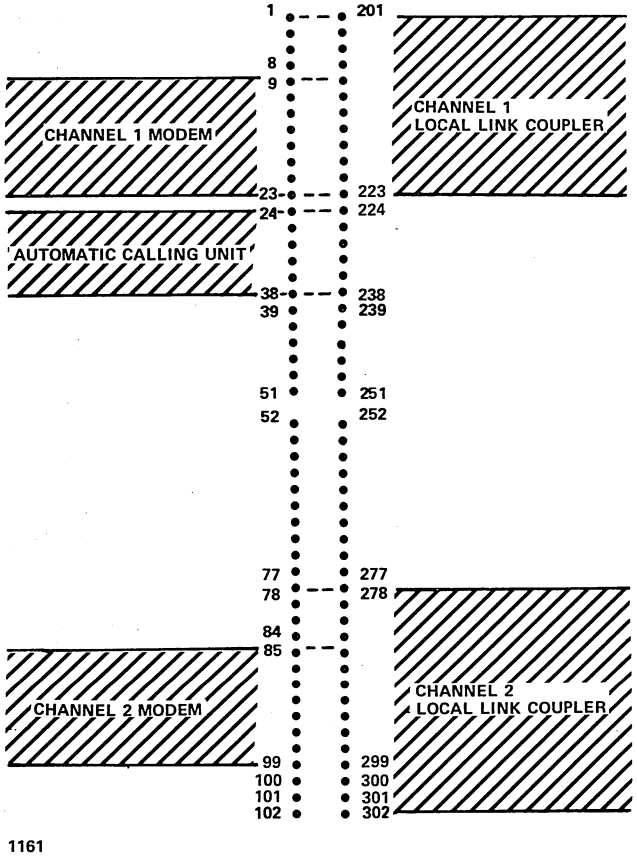

Figure 24-2. SDLC CLA Backplane Pin Assignments

RS232-C I/O connector panel in the processor cabinet (refer to figure 24-3). The external devices interface the CLA from this panel.

Various combinations of devices may be controlled by the SDLC CLA via the I/O connector panel. Either or both channels may be connected to opto-isolated circuits by installation of a local link coupler. Refer to figure 24-2 and the following list for permissible combinations:

- One or two modems, with or without ACU
- One modem and one opto-isolated channel, with or without ACU
- Two opto-isolated channels

The processor backplane and I/O connector panel are accessed by removing the processor cabinet rear panel.

MODEM CABLES

Two ribbon cables supplied with the SDLC CLA are compatible for connecting either channel to the I/O connector panel for modem connection. To install cables between the processor backplane and the I/O connector panel, proceed as follows:

1. Insert the ribbon cable D-connector into an SDLC CLA cutout of the I/O connector panel with pin 1 of the connector oriented as shown in figure 24-3.
2. Attach the connector to the panel using the two jack screws, nuts, and washers provided, as shown in figure 24-4. Locate the jack screws within the I/O connector panel.
3. Route the cable from the I/O connector panel to the processor backplane, as illustrated in figure 24-5.
4. Attach the cable to the intended CLA board slot backplane pins. Verify, as labeled on the connector and shown in figure 24-2, the starting and ending backplane pin numbers to which the connector should be securely mated.
5. Attach the cables to the processor cabinet overhead cable support bar using the cable strap and roll form thread screw, as shown in figure 24-5.

ACU CABLE

One ribbon cable assembly supplied with the SDLC CLA provides the interface connection between the CLA backplane pins and the I/O connector panel for automatic calling unit connection. To install the cable, proceed as follows:

1. Insert the ribbon cable D-connector into an SDLC CLA cutout of the I/O connector panel with pin 1 of the connector oriented as shown in figure 24-3.

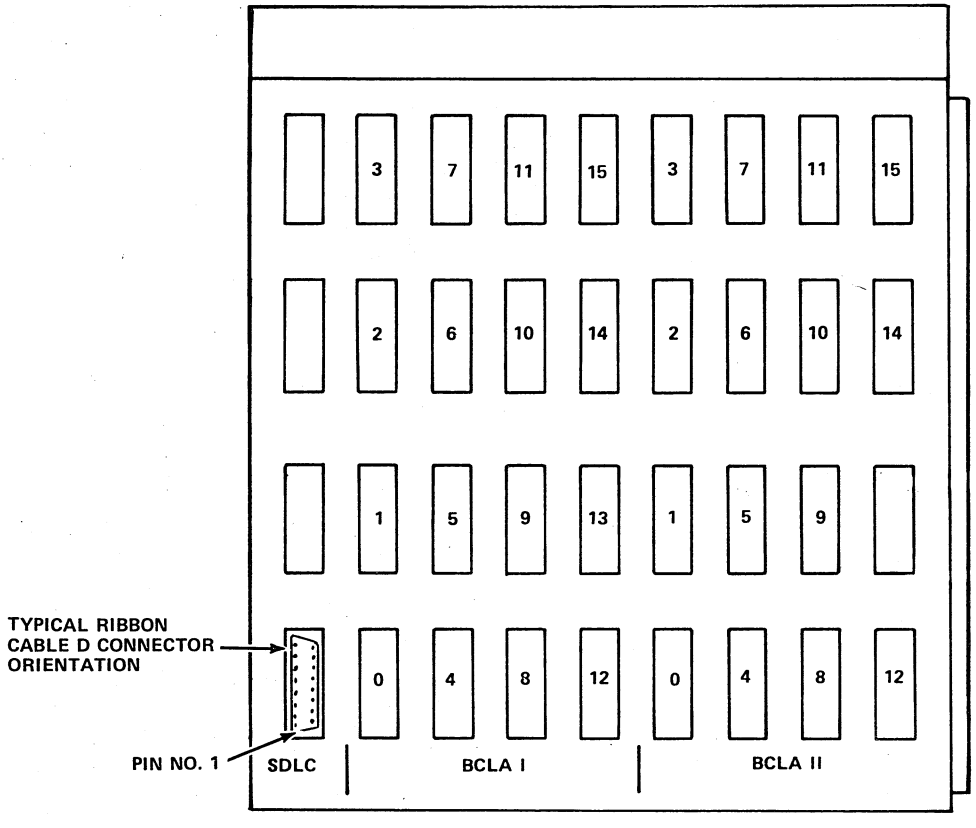

Figure 24-3. I/O Connector Panel Cutout Assignments

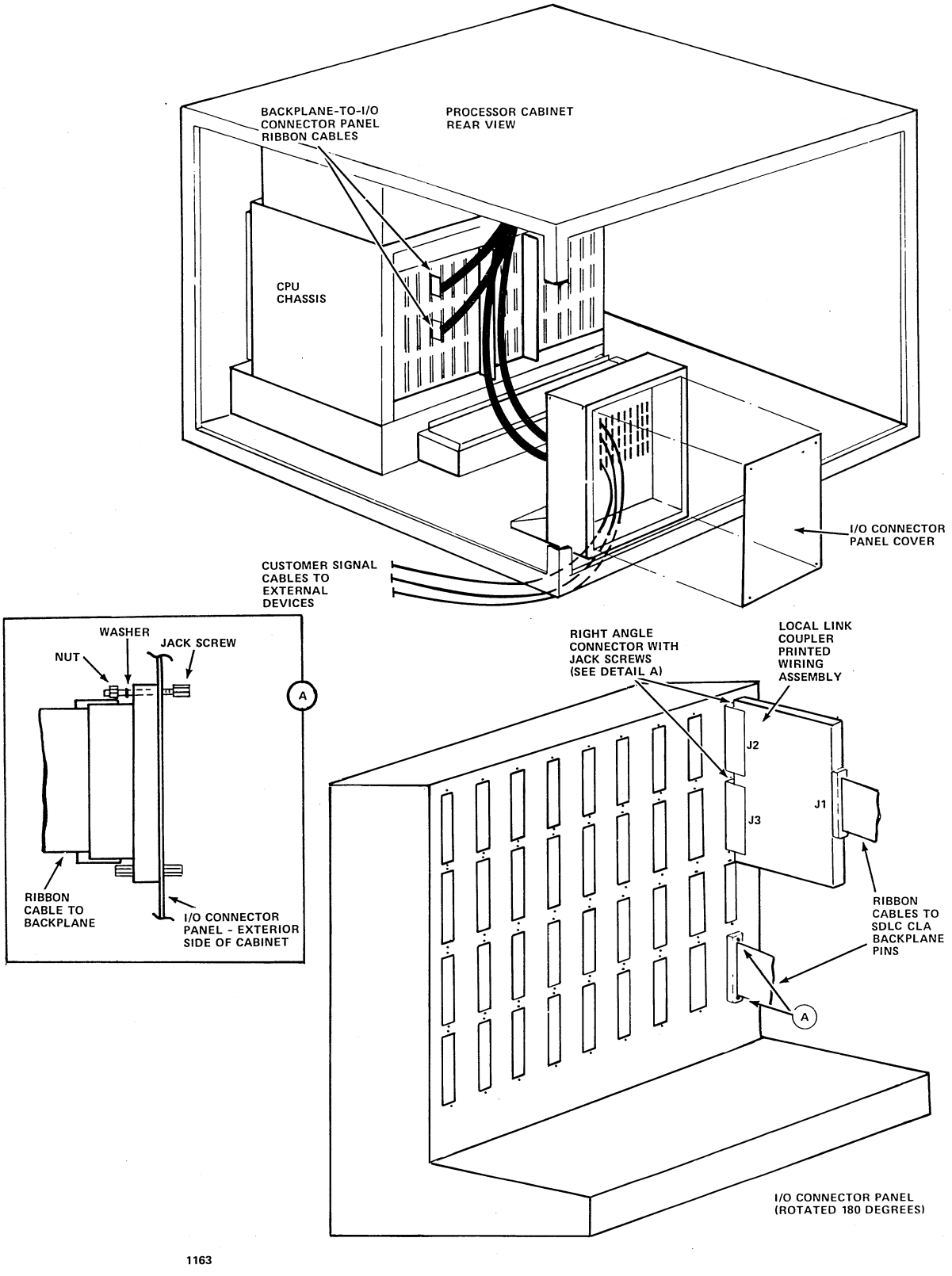

Figure 24-4. SDLC CLA Signal Cabling Installation

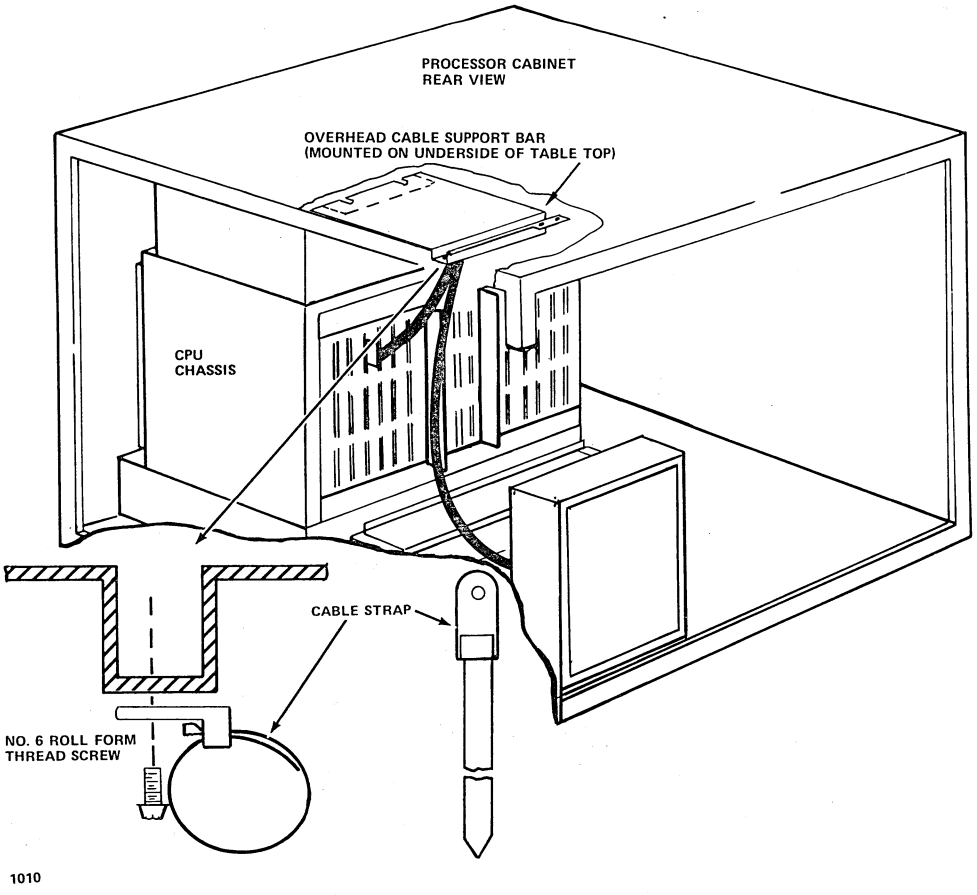

Figure 24-5. Cabinet Overhead Cable Routing

2. Attach the connector to the panel using the two jack screws, nuts, and washers provided, as shown in figure 24-4. Locate the jack screws within the I/O connector panel.

3. Route the cable from the I/O connector panel to the processor backplane, as illustrated in figure 24-5.

4. Attach the cable to the CLA board slot backplane pins. Verify, as labeled on the connector and shown in figure 24-2, the starting and ending backplane pin number to which the connector should be securely mated.

5. Attach the cable to the processor cabinet overhead cable support bar using the cable strap and roll form thread screw, as shown in figure 24-5.

LOCAL LINK COUPLER

The optional local link coupler is attached to the I/O connector panel within the processor cabinet. To install this local link coupler, proceed as follows:

1. If the local link coupler is to be installed in an inaccessible location of the I/O connector panel, remove the I/O connector panel to gain access. Tag and remove any other couplers or adapters mounted on the panel, if necessary, to install the coupler(s). For easier access to the mounting screws, remove the LLCs from right to left on the I/O connector panel.

2. Insert the couplers' right-angle connectors into two adjacent cutouts of the I/O connector panel with pin 1 of the D-connectors oriented as shown in figure 24-3.

3. Attach the right-angle connectors to the I/O connector panel using the four jack screws, nuts, and washers provided, as shown in figure 24-4. Locate the jack screws on the inside of the I/O connector panel.

4. Attach the connector of the coupler ribbon interface cable to the input connector of the coupler, as shown in figure 24-4. Observe proper pin polarity, as labeled on the connectors, when plugging pins into the coupler. Tag and temporarily remove any other cables or adapters if necessary to access the cable connector hardware.

5. Route the cable from the I/O connector panel to the processor backplane, as shown in figure 24-5.

CAUTION

The equipment can be damaged if the local link coupler to CPU cable backplane connector is not properly mated to the CLA board slot backplane pins.

6. Attach the cable to the CLA board slot backplane pins. Verify, as labeled on the connector and shown in

figure 24-2, the starting and ending backplane pin numbers to which the connector should be securely mated. The coupler must be connected to the SDLC CLA channel specified on the cable.

7. Install the overhead cable support bar if not previously installed as shown in figure 24-5.

8. Attach the cables to the processor cabinet overhead cable support bar using the cable strap and roll form thread screw, as shown in figure 24-5.

9. Replace in reverse order all of the cables, adapters, and/or couplers that were tagged and removed in the previous instructions.

10. Install the I/O connector panel, as shown in figure 24-4.

EXTERNAL DEVICE CABLING

To install the external signal cables, remove the I/O connector panel cover. Connect the signal cables between the interior of the I/O connector panel and the external devices. Ensure that the cables are mated to the correct SDLC CLA interface connector at the I/O connector panel, and exit the cabinet through the cutout of the cabinet floor.

I/O CONNECTOR PANEL AND OVERHEAD CABLE SUPPORT BAR INSTALLATION

I/O CONNECTOR PANEL

1. Remove the processor cabinet left side and rear panels.

2. Remove the plate retained by the four screws at the bottom of the processor cabinet.

3. Remove the I/O connector panel cover (figure 24-4).

4. Secure the I/O connector panel to the processor cabinet bottom. Use the four screws from step 2. Note the direction of installation as shown in figure 24-4.

OVERHEAD CABLE SUPPORT BAR

1. Remove the processor cabinet right side and rear panels.

2. Loosen the nuts retaining the heat sensor mounting bracket on the underside of the processor cabinet top.

3. Slide the cable support bar above the processor card cage on the underside of the cabinet top. See figure 24-6.

4. Slide under and line up the heat sensor bracket and the cable support bar holes and secure with the heat sensor bracket nuts. See figure 24-6.

5. Use the two machine nuts provided to secure the cable support bar onto the underside of the cabinet top on the wire wrap side of the processor backplane. See figures 24-5 and 24-6.

Modem/ACU Cabling

External cables to modems and automatic calling units connect directly to the I/O connector panel interior via standard RS232 connectors. Attach the cables to the designated SDLC CLA channel (figure 24-3) at the I/O connector panel. Insert the two connector retaining screws into the jack screws that secure the SDLC CLA cable to the I/O connector panel (figure 24-4).

Multidrop Network Cabling

Multidrop network operation requires that all external connections be made at the local link coupler via coaxial cables terminated with standard RS232-D connectors. A maximum of 15 stations may be connected in a single network provided that the external cabling is limited to a maximum cumulative length of 3,000 feet (914 meters). Figure 24-7 defines the cabling requirements for a multidrop network.

Assemble the external cable and required extension as shown in figure 24-7. Using the jack screws provided, make the extensions as labeled on each connector. Attach the assembled cable to each processor I/O connector panel, observing proper connector position as labeled on the cable connectors and the local link couplers. Insert the two connector retaining screws into the jack screws that secure the local link coupler to the I/O connector panel (figure 24-4).

SWITCH/JUMPER VERIFICATION

The following switch and jumper positions must be verified and set prior to inserting the SDLC CLA into its assigned slot. Refer to figure 24-8 to assist in locating the switches and jumpers on the PWA. Location E3 on the PWA is used for storing spare jumpers. Any jumpers not required for system configuration should be inserted into this area for possible future use.

The dual inline package (DIP) switches used on the PWA are eight-segment switches. Not all segments of some switches are used in the CYBER 18 application. Unused segments should always be left in the off position. A plus mark (+) on the top bank of the switch identifies the on position of any segment. The switch is considered on when the toggle on the marked side of the switch is depressed.

CAUTION

Printed wiring assemblies with red solder marks, such as the SDLC CLA, contain MOS or electrostatic-sensitive devices. Exercise extreme care in handling to avoid damage. Common practices, such as touching a grounded surface before handling, inserting in antistatic or conductive bags for storage or transfer, and repairing only at properly equipped and grounded work stations, must be strictly followed.

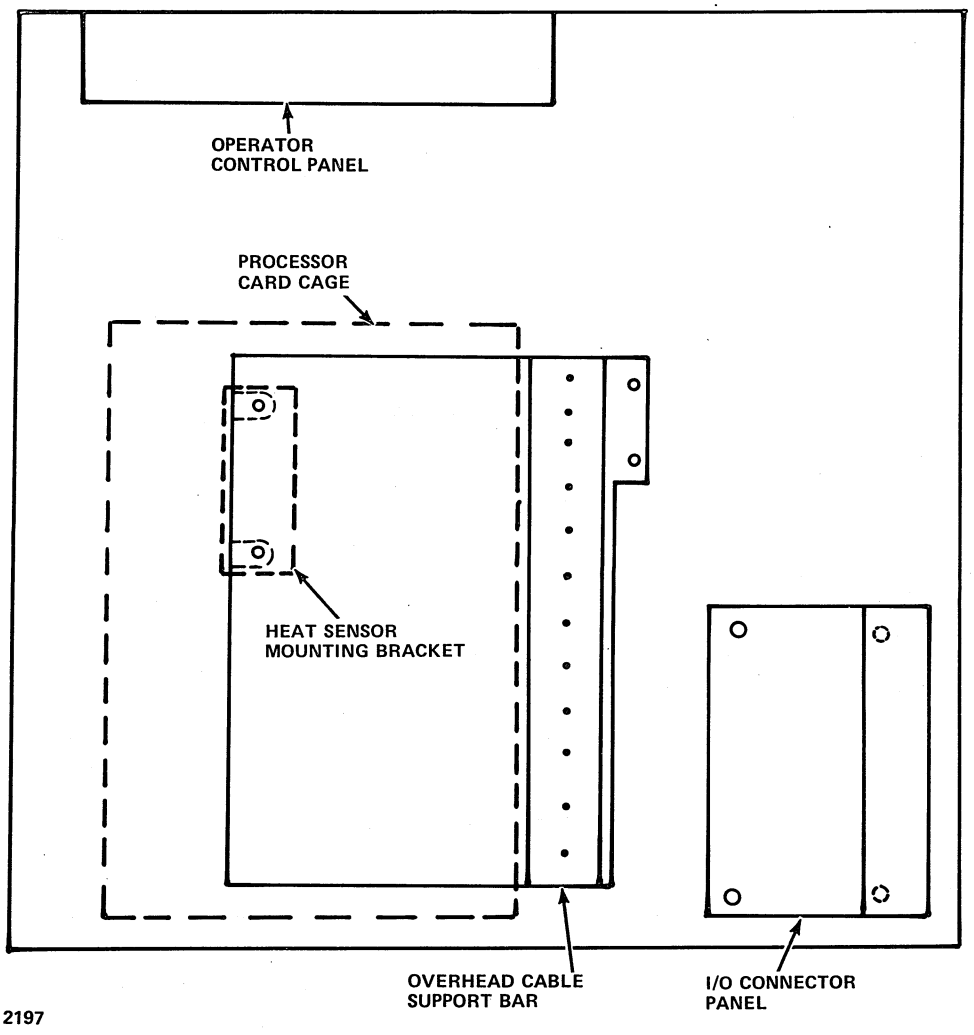

Figure 24-6. I/O Connector Panel and Overhead Cable Support Bar Installation

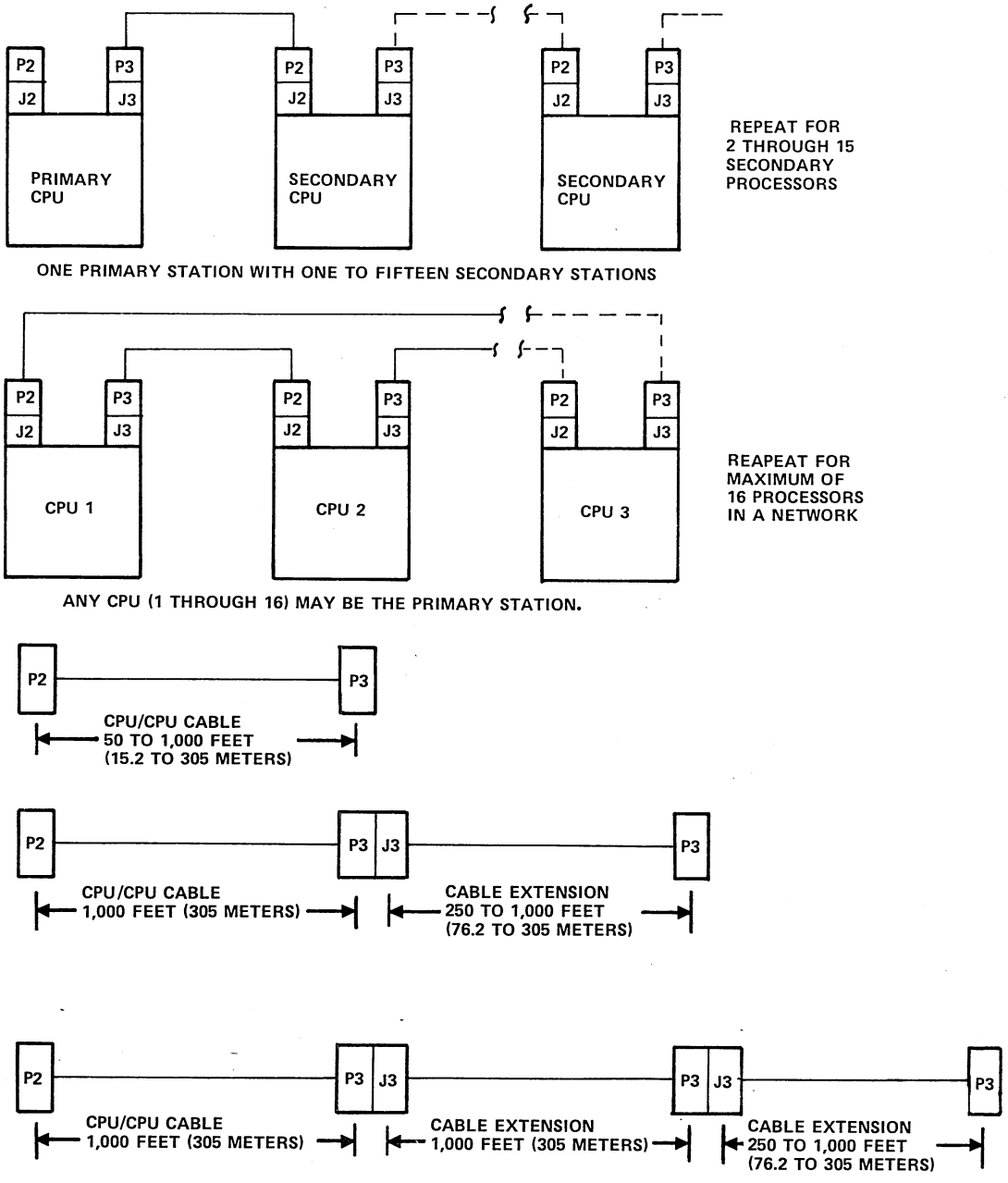

Figure 24-7. Multidrop Network Cabling

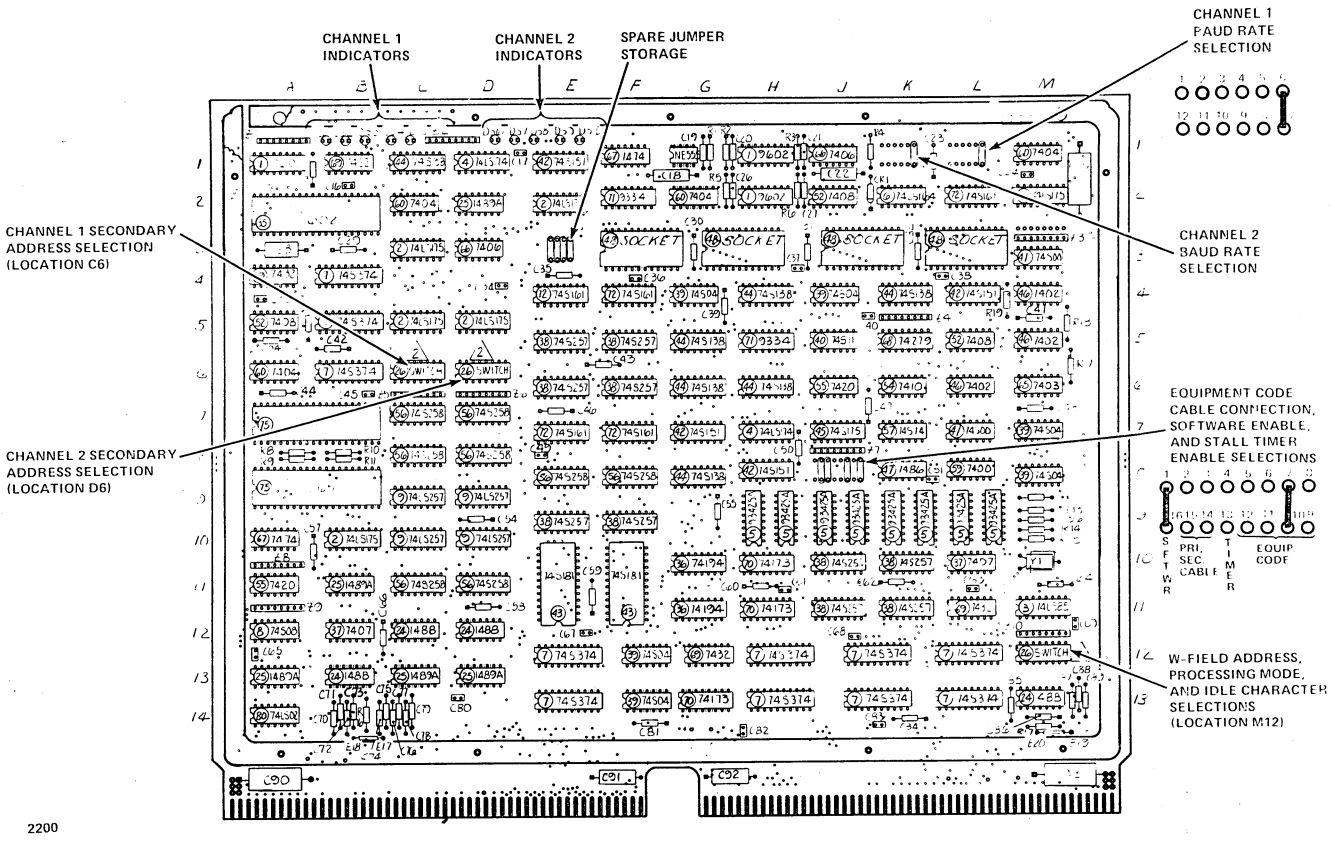

Figure 24-8. PWA Switch and Jumper Locations

SECONDARY ADDRESS SELECTION

A secondary address for each channel of the SDLC CLA is established by the DIP switches at board location C6 (channel 1) and D6 (channel 2). This address is required for each channel of the SDLC CLA when the secondary address mode is used, as in normal CYBER 18 configurations. The secondary address to be established must be determined at installation time based on the number of communication lines served by the processor. Each line must be identified by a different secondary address. Secondary addresses should be assigned for each communication line served, beginning with D and increasing by one for each additional line.

Each DIP switch must be set to provide the secondary address by placing the eight segments in the required position. Bit positions are labeled above each switch segment. A given bit is enabled when the switch toggle on the bank bearing a + mark is depressed. Values from 0 to 255 (binary 00000000 through 11111111) are selectable. Refer to figure 24-9 when establishing the secondary address for each channel.

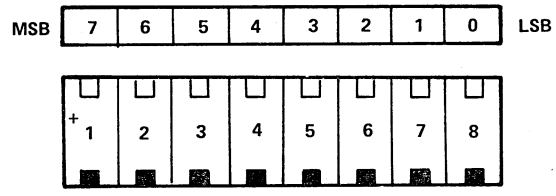

NOTE: BIT IS ENABLED WITH SWITCH ON AND DISABLED WITH SWITCH OFF.

1165

Figure 24-9. Secondary Address Selection

W-FIELD ADDRESS

Positions 5 through 8 of the DIP switch at board location M12 are associated with the W-field address. This address identifies the specific CLA within a system. The address may have any binary value from 0001 to 1111, allowing

selection of up to 15 different addresses. The SDLC CLA normally uses address values from 0001 to 0111. Position 4 of this switch is not used in the CYBER 18 configuration and must remain off. Refer to table 24-2 to establish the desired W-field address. Also, jumpers on the board must be configured for the proper equipment number, as described later, to permit complete addressing of the CLA.

PROCESSING MODE

Segments 1 (channel 1) and 3 (channel 2) of the DIP switch at location M12 are used to allow selection of the processing mode. The segment should be set to the on position to enable this mode; this is the normal configuration for CYBER 18 applications. The off position of the segment disables the mode. Refer to table 24-3 for selectable options.

IDLE CHARACTER

Segment 2 of the DIP switch at location M12 is used to allow channel idle character selection to generate a flag or an abort character if transmitter underrun occurs in the SDLC mode. The off position of the switch selects a flag character; the on position selects an abort character. The idle character fill for both channels is selected by this switch segment. Refer to table 24-3 for selectable options.

EQUIPMENT CODE SELECT

An equipment code of 13 (1101 binary) has been established for the SDLC CLA in the CYBER 18 systems. Refer to table 24-4 to verify that the equipment code selection jumpers at location J8 are in the proper configuration.

TABLE 24-2. W-FIELD ADDRESS SELECTION

W-Field Address (Q15 through Q11)†		Switch Position			
Hexadecimal Value (Q15 - Q12)	Binary Bits	S5 (Q15)	S6 (Q14)	S7 (Q13)	S8 (Q12)
0††	00000	Off	Off	Off	Off
1†††	00010	Off	Off	Off	On
2	00100	Off	Off	On	Off
3	00110	Off	Off	On	On
4	01000	Off	On	Off	Off
5	01010	Off	On	Off	On
6	01100	Off	On	On	Off
7	01110	Off	On	On	On
8	10000	On	Off	Off	Off
9	10010	On	Off	Off	On
A	10100	On	Off	On	Off
B	10110	On	Off	On	On
C	11000	On	On	Off	Off
D	11010	On	On	Off	On
E	11100	On	On	On	Off
F	11110	On	On	On	On

†Q11 is not selectable on the SDLC PWA and is hardwired to a "low" (zero) state.

††The SDLC CLA does not respond to any commands when the W-field switches (positions 5 through 8) are in the off position.

†††Normal configuration when using NAM 18 protocol

TABLE 24-3. PROCESSING MODE AND IDLE CHARACTER SELECTION

Switch Segment and Function	Switch Position	Condition Selected
S1 Channel 1 processing mode	On†	Channel 1 processing mode enabled
	Off	Channel 1 processing mode disabled
S2 Idle character selection	On	Abort character selected
	Off†	Flag character selected
S3 Channel 2 processing mode	On†	Channel 2 processing mode enabled
	Off	Channel 2 processing mode disabled
S4 Not used	On	None
	Off†	

†Normal CYBER 18 configuration

TABLE 24-4. EQUIPMENT CODE SELECT JUMPERS

Equipment Code (Q10 through Q07)		Jumper Condition (Location J8)†			
Hexadecimal Value	Binary Bits	5-12 (Q10)	6-11 (Q09)	7-10 (Q08)	8-9 (Q07)
0	0000	In	In	In	In
1	0001	In	In	In	Out
2	0010	In	In	Out	In
3	0011	In	In	Out	Out
4	0100	In	Out	In	In
5	0101	In	Out	In	Out
6	0110	In	Out	Out	In
7	0111	In	Out	Out	Out
8	1000	Out	In	In	In
9	1001	Out	In	In	Out
10	1010	Out	In	Out	In
11	1011	Out	In	Out	Out
12	1100	Out	Out	In	In
13††	1101	Out	Out	In	Out
14	1110	Out	Out	Out	In
15	1111	Out	Out	Out	Out

NOTES:

†In = Binary 0
Out = Binary 1

††Normal CYBER 18 configuration

CABLE CONNECTION SELECTION

Two jumper positions at board location J8 select the master control or secondary control of the local link cable connection for each channel upon CLA initialization. A jumper installed between terminals 3 and 14 for channel 1 and terminals 2 and 15 for channel 2 select secondary control. Master control of the local link cable connection is selected when no jumpers are installed. Only one channel on a local link network may be configured for master control. Ensure that the jumpers are configured for the specific CLA application as indicated in table 24-5.

SOFTWARE ENABLE

One jumper position at location J8 allows software to have the capability, under program control, to modify the master and secondary cable connections established by the cable connection selection jumpers. The jumper installed between terminals 1 and 16 does not allow software to change the cable connections (normal configuration). When this jumper is removed, software is enabled to change the cable connection under program control. Configure the jumper as indicated in table 24-5.

STALL TIMER

One jumper position at location J8 provides control of the stall timer. When the jumper is installed between terminals 4 and 13, the stall timer is disabled. The stall timer is enabled with the jumper removed; this is the normal CYBER 18 configuration. Configure the jumper as defined in table 24-5.

SOLDER JUMPERS

Two solder jumpers, one at I/O pin 18 (below location B13) for channel 1 and one at I/O pin 94 (below location M13) for channel 2, provide external clock signals between the two channels for data transfer on hardwired links. These jumpers are normally installed. They should be removed at system installation only when a channel is connected to a modem and the SCTE signal interferes with the normal modem internal clock signals.

20-BIT ADDRESS BACKPLANE

A jumper position at board location G13 is used with other configurations for the common controller portion of the SDLC CLA printed wiring board. A jumper is installed at this position when the SDLC CLA is used in a CPU that has 20-bit addressing capability; the jumper is not installed when the SDLC CLA is used in a CPU that has 18-bit addressing capability (normal configuration).

DATA TRANSFER RATE SELECTION

Data transfer rates for each channel are established by jumpers at location L1 (channel 1) and K1 (channel 2). The normal CYBER 18 configuration uses a rate of 62,500. Refer to table 24-6 to establish the rate for each channel. Ensure that only one jumper is installed for each channel.

PWA INSERTION

After all switches and jumper selections have been determined and properly set, the PWA is ready for insertion into the assigned slot. Proceed as follows:

1. Remove the right side panel of the processor cabinet.
2. Release the two captive latches on the processor chassis cover and remove the cover.

TABLE 24-5. CABLE CONTROL AND STALL TIMER SELECTION

Jumper Position and Function (Location J8)	Jumper Condition	Condition Selected
1-16 Software cable control	In†	Software has no control over the cable connection.
	Out	Software has the capability to modify the cable connection.
2-15 Channel 2 cable connection††	In†	Channel 2 has control of the secondary cable.
	Out	Channel 2 has control of the master cable.
3-14 Channel 1 cable connection††	In	Channel 1 has control of the secondary cable.
	Out†	Channel 1 has control of the master cable.
4-13 Stall timer control	In	Stall timer disabled
	Out†	Stall timer enabled

†Normal CYBER 18 configuration

††Only one channel can be selected for master cable control

TABLE 24-6. DATA TRANSFER RATE SELECT JUMPERS

Rate	Jumper Position
62,500†	6-7
125,000	5-8
250,000	4-9
500,000	3-10
1,000,000	2-11
External (Modem clock)	1-12

†Normal CYBER 18 configuration

CAUTION

The SDLC CLA must be installed in an A/Q-DMA slot only, with its components facing left.

3. Carefully insert the board into the chassis slot. Make sure that the board is properly seated in the upper and lower chassis guide rails.
4. Ensure that the board is fully seated within the chassis backplane connector by applying firm thumb pressure at the upper and lower corners of the front of the board.
5. Replace the chassis cover plate.
6. Replace the cabinet side panel.
7. Replace the I/O connector panel cover and the cabinet rear panel.

DIAGNOSTIC TESTING

Perform the manual operating and diagnostic checks according to the diagnostic decision logic tables (DDLTs) described in the applicable subsystem field repair guide.

NOTE

The diagnostic tests and routines described in the subsystem field repair guide can be performed only after the processor, console display, and flexible disk drive (diagnostic load device) installations are complete.

The buffered communication line adapter (BCLA) is a one- or two-board device that is inserted into board slots of the processor chassis. The primary BCLA is a one-board device that permits interface to six communication channels. This primary BCLA consists of one PWA to be inserted into an A/Q-DMA slot of the processor and one backplane adapter, with attached ribbon cables, to be installed over the processor backplane pins. The expansion BCLA is a one-board device that permits expansion to accommodate 10 additional communication channels. This expansion BCLA consists of one PWA to be inserted into an A/Q or open slot of the processor; one 40-position ribbon cable to be installed between the front edges of the primary and expansion boards; and one backplane adapter, with attached ribbon cables, to be installed over the processor backplane pins.

The adapter board ribbon cables provide the interface between the processor backplane and the I/O connector panel located at the rear of the processor cabinet. Optional current loop adapters are available for interfacing communication circuits that are not RS232-C-compatible. These adapters consist of a printed wiring assembly mounted on the I/O connector panel, in series with the ribbon cables from the adapter board. Each current loop adapter accommodates two channels. An add-on power supply is required for their operation.

PARTS AND EQUIPMENT

Parts and Equipment	Equipment Number	Part Number
Primary buffered communication line adapter	FJ127-A	96750691
Primary BCLA printed wiring assembly		96752197† or 96720419
Backplane-to-cable harness adapter with 6 ribbon cables, 4 feet (1.2 meters)		96751072
Jumper, BCLA interrupt		96752734
Expansion buffered communication line adapter	FJ128-A	96750695
Expansion BCLA printed wiring assembly	--	96751057† or 96752186
Backplane-to-cable harness adapter with 10 ribbon cables, 4 feet (1.2 meters)	--	96751070
Cable assembly, primary-to-expansion PWA interface	--	96751978
Loop-back test cable	--	96720730
Current loop adapter finalization kit	DY221-A	96837757
Current loop adapter	DT610-A	96870310
Current loop test cable	--	96743945
I/O connector panel	AT391-A	96755002

†Interchangeable assemblies

TOOLS AND TEST EQUIPMENT

No special tools or test equipment are required to install the BCLA or its associated equipment.

UNCRATING

The BCLA printed wiring assemblies, current loop adapter, and associated cables are shipped installed in the processor or packed in a heavy-duty cardboard carton. If the equipment is received installed in the processor, refer to section 2 for the uncrating procedures. If the equipment is shipped in a cardboard carton, it is buffered from shock and impact damage by industrial filler. No special instructions are required to remove the BCLA and associated equipment from the carton.

CRATING

Refer to the above uncrating instructions for crating the units.

INSPECTION

Inspect the BCLA printed wiring assemblies, cables, couplers, and power supply as follows:

1. Remove the items from the shipping carton and check for obvious damage.
2. Check the contents of each carton against the packing list.

3. Examine all connector plugs for possible bent, missing, or broken pins.

4. Inspect all cables for damage to insulation and for security of connectors.

5. Inspect for physical damage to the printed wiring assemblies.

POWER REQUIREMENTS

The primary and expansion printed wiring assemblies receive +5 V dc and ±12 V dc from the processor dc power supply by connection to the assigned backplane slot position. The current loop adapters receive ±12 V dc from the processor dc power supply and +24 V dc from an add-on power supply. The add-on power supply and power cabling for the current loop adapters are provided in the initial current loop adapter installation kit.

SIGNAL CABLING

The primary BCLA is supplied with one backplane adapter board with six ribbon cables attached. The expansion BCLA includes one backplane adapter board with 10 ribbon cables attached and one primary-to-expansion PWA ribbon cable. The attached ribbon cables interface each channel of the BCLA, independently, to the I/O connector panel in the processor cabinet. The external devices interface the BCLA at this panel via the customer-supplied signal cables.

Multiple BCLAs may be installed in a single processor. If more than one BCLA is being installed in the processor, the interrupt wiring (described later in this section) should be installed and verified prior to attempting signal cable installation.

I/O CONNECTOR PANEL

Refer to figure 25-1 and 25-2 for illustrations of the I/O connector panel location and orientation.

1. Remove the processor cabinet rear, left, and right side panels.

2. Remove and discard the plate attached to the processor cabinet floor (at the left rear corner).

3. Remove the I/O connector panel cover.

4. Using the plate-attaching hardware removed in step 2, secure the I/O connector panel to the processor cabinet floor.

OVERHEAD CABLE SUPPORT BAR

Refer to figure 25-1 and 25-2 for illustrations of the support bar location and attachment. The bar is used to support the backplane adapter to I/O connector panel ribbon cables.

1. Loosen the nuts that attach the heat-sensor mounting bracket to the underside of the table top. Access is from the right side above the processor card cage.

2. Slide the notched end of the support bar over the top baffle plate of the processor card cage and under the heat-sensor mounting bracket. Engage the notches with the mounting screws of the heat sensor mounting bracket. Also engage the holes of the support bar with the two studs projecting from the table top.

3. Using the nuts and washers provided with the support bar, secure the back side of the support bar.

4. Secure the heat-sensor mounting bracket.

PRIMARY BCLA SIGNAL CABLING

Refer to section 1 to identify the slot assigned within the processor for the primary BCLA. Then proceed to install the signal cables between the processor backplane and the I/O connector panel as follows:

1. Attach the primary (six-ribbon-cable) backplane adapter board to the assigned board slot backplane pins, as shown in figure 25-2. Verify as labeled on the adapter board connectors the starting and ending backplane pin numbers to which the adapter board should be securely mated.

2. If current loop adapter hardware is to be installed, perform the current loop adapter installation before proceeding with steps 3 through 7.

3. Route the ribbon cables from the processor backplane to the I/O connector panel, as shown in figure 25-2. Maintain the cables in a neatly dressed bundle.

4. Select one ribbon cable at a time for attachment to the I/O connector panel. Verify the cutout assignments for each cable to be as labeled on the ribbon cable and shown in figure 25-3. Channel assignments are labeled on the back of each connector to coincide with the cutout numbers.

5. Insert the cable connector into the assigned cutout, with the D connector oriented as shown in figure 25-3.

6. Attach the D connector to the panel using the two jack screws, nuts, and washers provided, as shown in figure 25-2. Locate the jack screws within the I/O connector panel.

7. Attach the ribbon cables to the processor cabinet overhead cable support bar using the cable straps and roll form thread screws, as shown in figure 25-4. All ribbon cables from a backplane adapter should use the same cable strap.

EXPANSION BCLA SIGNAL CABLING

Refer to section 1 to identify the slot assigned within the processor for the expansion BCLA. Then proceed as detailed above for the primary BCLA to install the ribbon cables between the backplane pins and the I/O connector panel. The primary-to-expansion PWA ribbon cable must be installed between the two boards prior to inserting the boards into the processor card cage, as described later in this section.

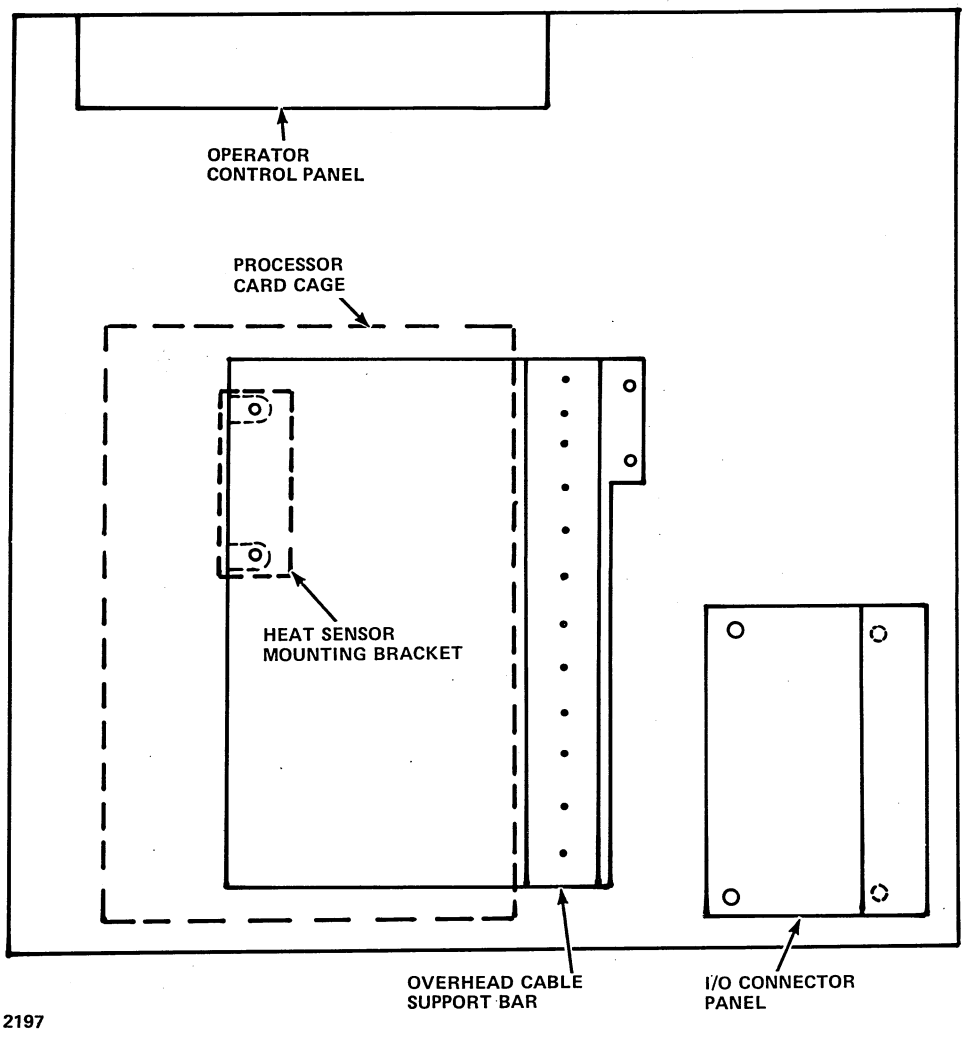

Figure 25-1. I/O Connector Overhead Cable Support Bar Location, Top View

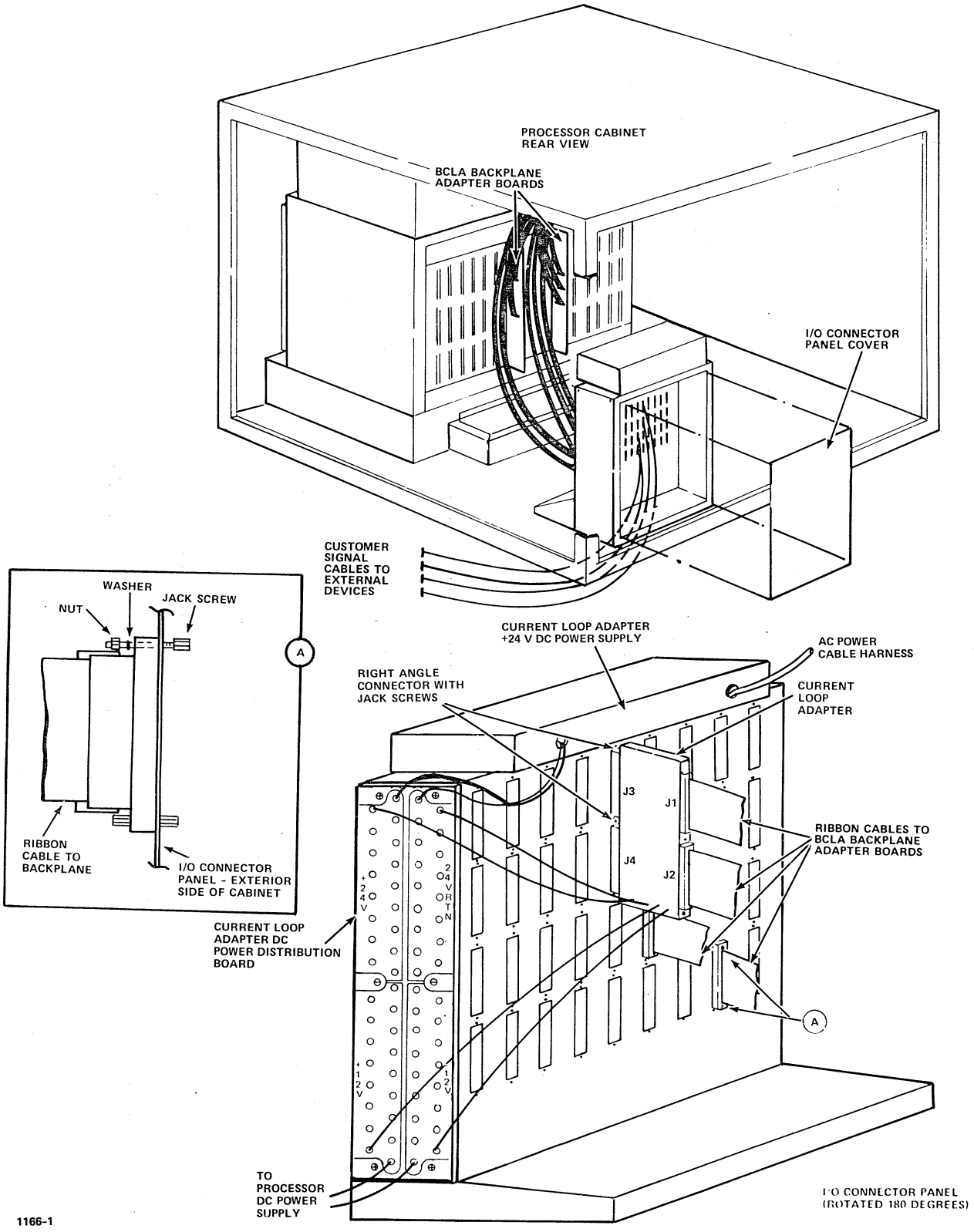

Figure 25-2. BCLA Signal Cabling Installation

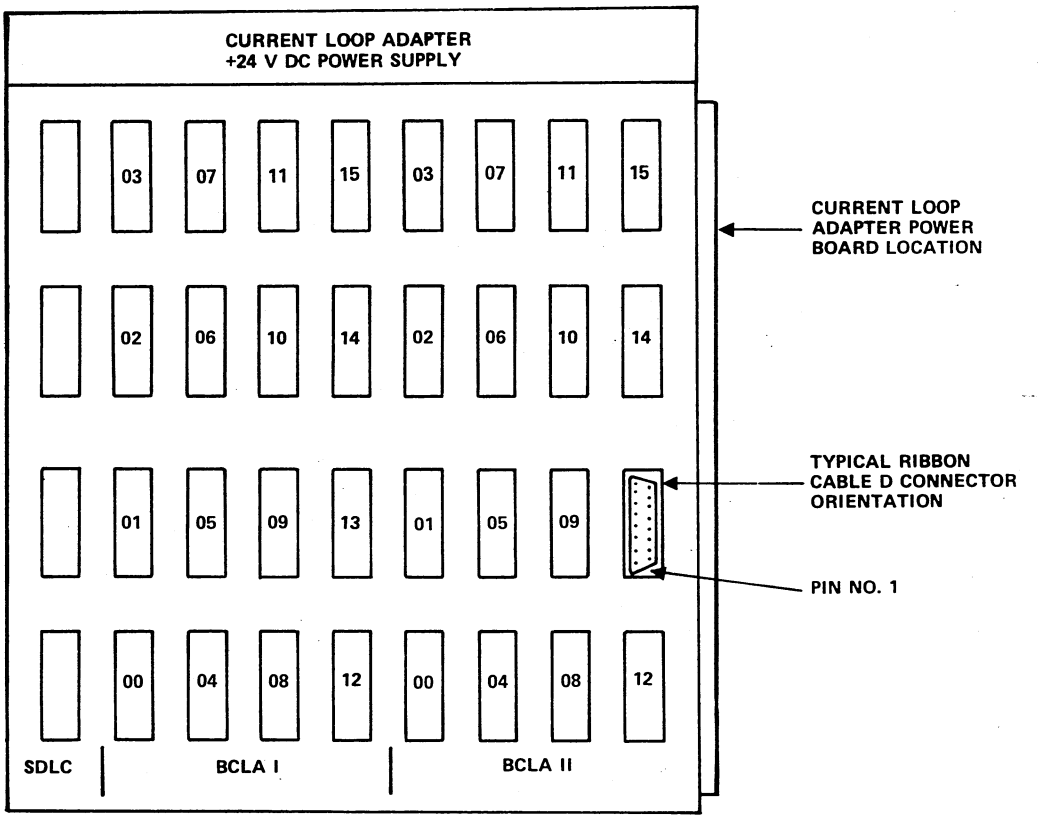

Figure 25-3. I/O Connector Panel Cutout Assignments

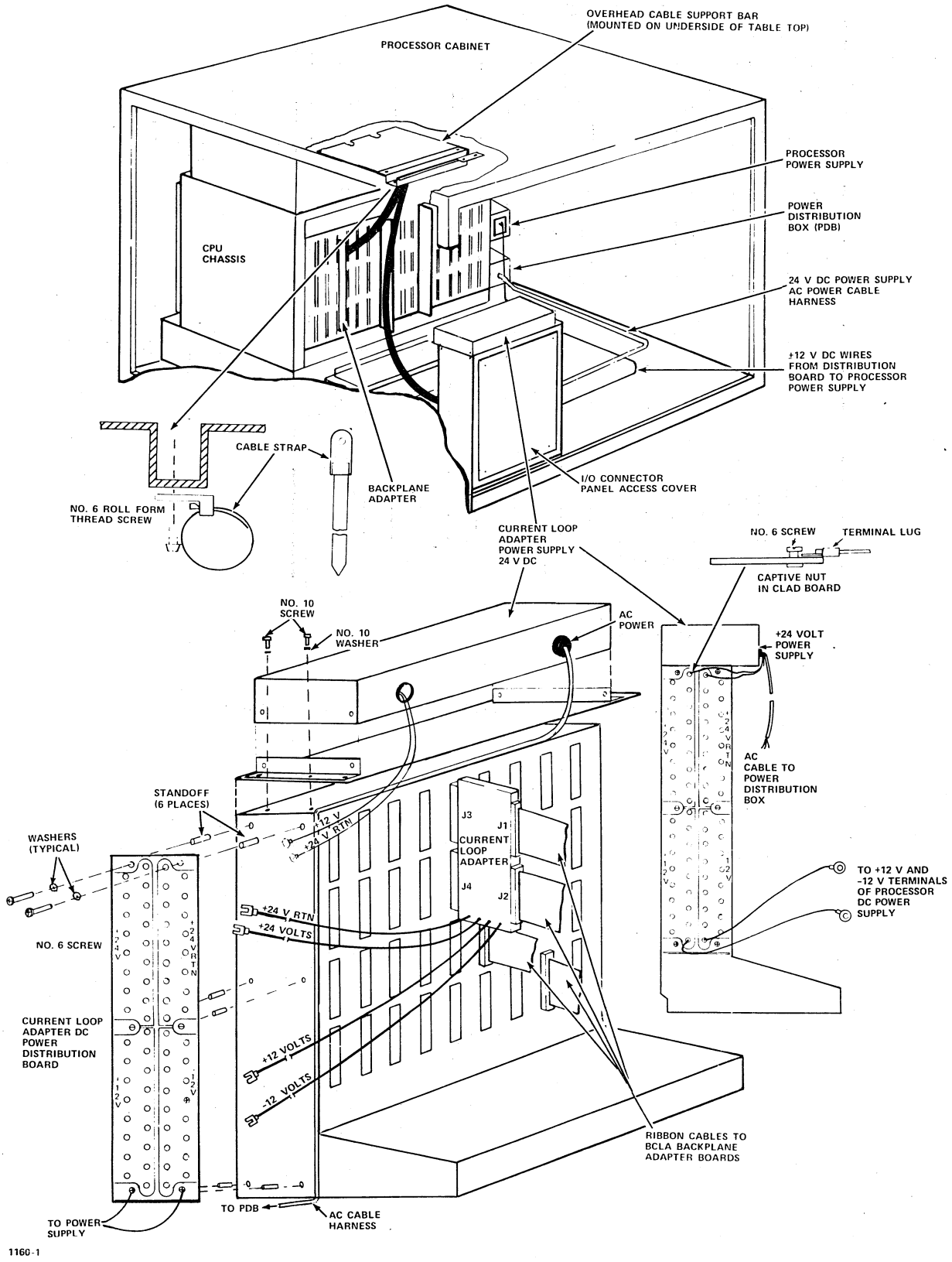

Figure 25-4. Cabinet Overhead Cabling and Power Supply Installation

CURRENT LOOP ADAPTERS

Current loop adapters are installed in series with the ribbon cables at the I/O connector panel. Each current loop adapter accommodates two communication channels. The add-on power supply furnished with the initial (DY221) current loop adapter kit must be installed prior to installing the current loop adapters.

To facilitate installation of current loop adapters and associated hardware, remove the I/O connector panel from the processor cabinet as follows:

1. Tag and remove all peripheral device cables that are attached to the I/O connector panel receptacles.
2. Remove the attaching hardware (four screws) and lift the I/O connector panel out of the processor cabinet.
3. Place the I/O connector panel on the floor next to the processor, within reach of the backplane adapter board ribbon cables.

POWER SUPPLY CABLING

The add-on power supply and cabling are installed as follows:

1. Turn off the power to the processor. Disconnect the processor power cord from the site power source.
2. If the processor cabinet panels have not been removed, remove the rear, left, and right side panels from the processor cabinet. Remove the cover from the power distribution box. Refer to figure 25-5.
3. Using the hardware furnished with the current loop adapter installation kit, mount the +24 V power supply assembly (figure 25-6) on the top of the I/O connector panel, as indicated in figure 25-4.
4. Route the ac power cord, with the attached faston terminals, to the processor floor and into the power distribution box (figure 25-4) via any cable entry connector. Attach the wires to terminals 4, 5, and 6 of the ac power sequencer board. Observe proper terminal connection as labeled on the wires and as follows:

   Terminal 6 - Line voltage
   Terminal 5 - Frame ground
   Terminal 4 - Neutral

5. Reinstall the power distribution box cover.
6. Install the current loop adapter power distribution board on the I/O connector panel using screws, nuts, washers, and insulators from the installation kit. Refer to figure 25-4.
7. Attach the +24 V (yellow) and +24 V return (gray) power wires to the power distribution board.
8. Attach the +12 V and -12 V dc power wires to the processor power supply output terminals using the spade terminals. Refer to figures 25-2 and 25-4. Observe proper polarity as follows:

   +12 V Red (+V2)
   -12 V Blue (-V2)

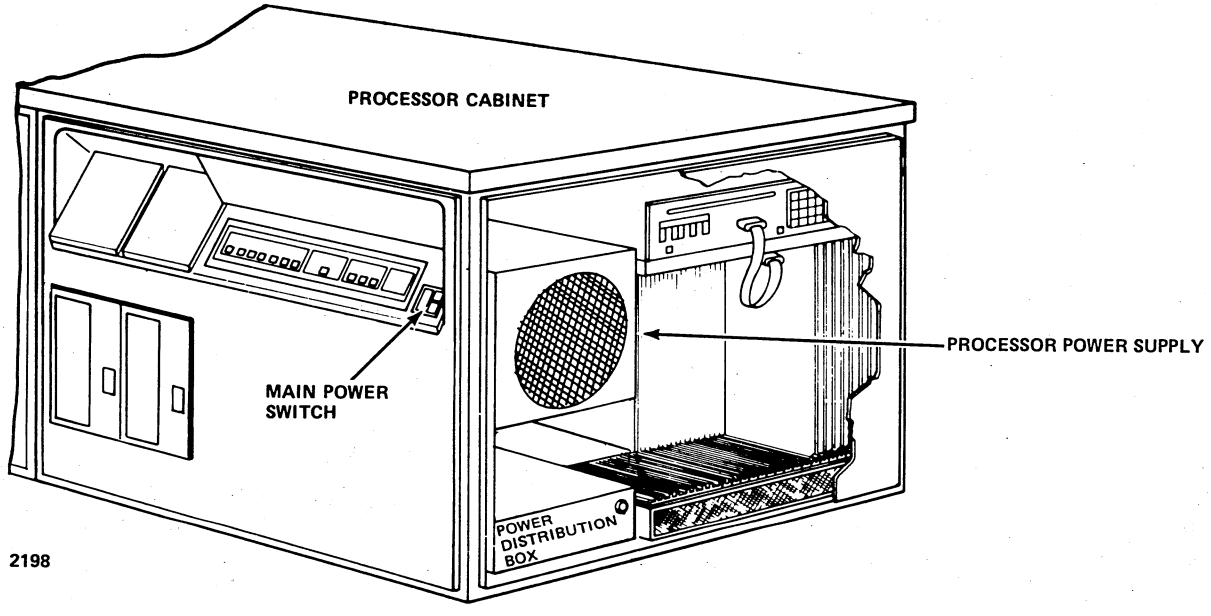

Figure 25-5. Processor Power Supply and Power Distribution Box Location

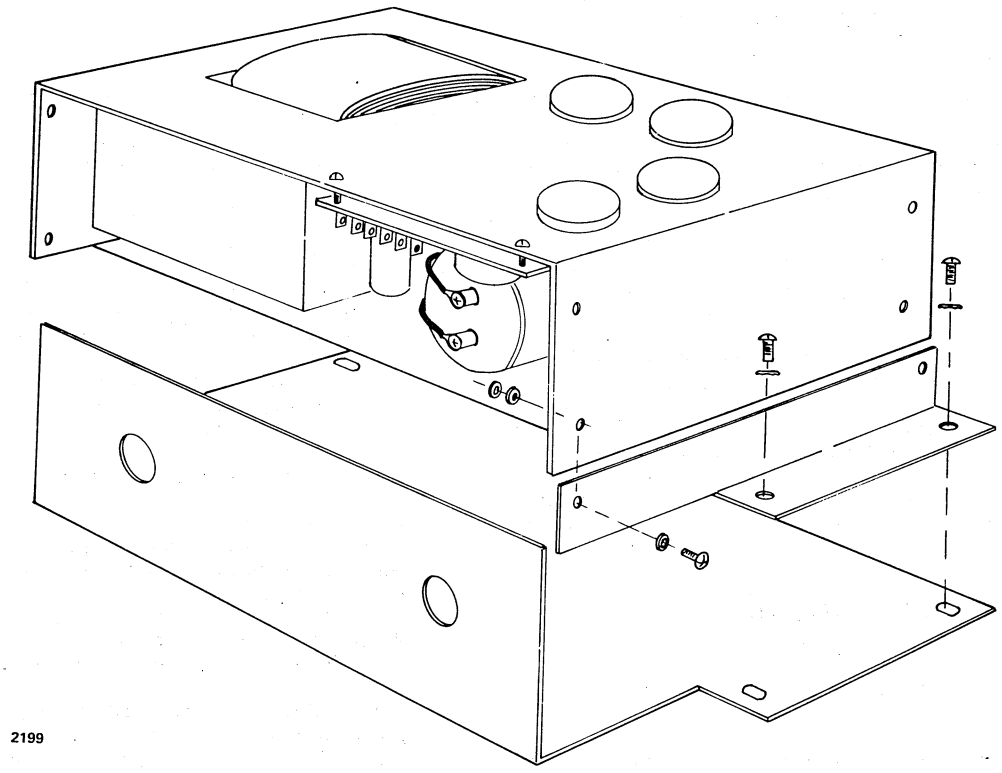

Figure 25-6. Power Supply Assembly Details

CURRENT LOOP ADAPTER

Each current loop adapter accommodates two communication channels. Refer to figure 25-3 to select the installation position for the adapter.

When installing multiple current loop adapters, plan the location of each adapter (figure 25-3) before installing the first one. Start the installation by placing the first adapter into the highest numbered cutout (figure 25-3) of the designated row; that is, closest to the power distribution board. Continue to install adapters from high to low numbered cutouts of each row.

If the current loop adapters are new from the factory perform diagnostic tests before installing them into the I/O connector panel. Connect all power wires, attach the ribbon cables, and place them on a nonconductive surface. Run the diagnostic tests, including the external loop-back test. If the adapter performs correctly, complete the installation into the I/O connector panel.

Refer to figures 25-3 and 25-4 and install the current loop adapters as follows:

1. If this installation is only a current loop adapter add-on, remove the processor cabinet left side and rear panels. Remove the I/O connector panel cover (figure 25-2).

2. If a ribbon cable was previously installed, remove the ribbon cable D connector from each of the selected cutouts. Retain the jack screws, nuts, and washers.

3. Insert the adapter right angle output connectors (J3 and J4) into the cutouts, with pin 1 oriented as shown in figure 25-3. Connector J3 mates to the top or third row and connector J4 to the second or bottom row of the cutouts. The adapter power wires must be oriented down, as shown in figure 25-2.

4. Using the jack screws, nuts, and washers removed in step 2 or provided in the installation kit, secure the adapter to the connector panel, as shown in figure 25-2. Locate the jack screw within the I/O connector panel, as shown in figure 25-2.

5. Route the ribbon cables from the processor backplane to the I/O connector panel, as shown in figure 25-4. Maintain the cables in a neatly dressed bundle.

6. Attach the ribbon cable D connectors to the input connectors (J1 and J2) of the adapter using the four screws, nuts, and washers provided in the installation kit.

7. Route the adapter power wiring to the current loop adapter power distribution board. Connect the wires to the power distribution board as follows:

Red	+12 V
Blue	-12 V
Yellow	+24 V
Gray	+24 V RTN

8. Attach the ribbon cables to the processor cabinet overhead cable support bar using the cable straps and

roll form thread screws, as shown in figure 25-4. Neatly dress and tie all newly installed power supply wiring. All ribbon cables from a backplane adapter use the same overhead cable support strap.

9. After all current loop adapters have been attached, reinstall the I/O connector panel into the processor cabinet.

10. Reconnect all peripheral device cables that were removed to accommodate the removal of the I/O connector panel.

EXTERNAL DEVICE CABLING

To install the customer-supplied signal cables, refer to figure 25-2. Connect the cables between the interior of the I/O connector panel and the external devices. Ensure that the cables are mated to the intended BCLA channel ribbon cable D connector. The customer cables must exit the processor cabinet through the floor cutout within the I/O connector panel.

Replace the I/O connector panel cover and processor cabinet left side and rear panels.

SWITCH/JUMPER VERIFICATION

One four-position dual inline package (DIP) switch at location U126 of the primary PWA (figure 25-7) and removable jumpers at location U73 and near location U132 are used to establish operating addresses for the BCLA. Bits from the software must match preset numbers for the BCLA to react to an A/Q command.

W-FIELD NUMBER SELECT

The W-field consists of address word (Q) bits 11 through 15 for any device on the A/Q bus. In the BCLA, bit 11 is hardwired to ground (a value of 0). The remaining bits (12 through 15) are selected by the DIP switch at location U126). A W-field value of 00000 binary is invalid. The range of W-field-selectable values is from 00010 to 11110 binary.

The standard CYBER 18 W-field value for the master primary BCLA in a system is 00010. In a system containing multiple BCLA subsystems, each additional primary BCLA is assigned the next higher value, starting with 00100 and continuing upward at binary increments of 00010 (table

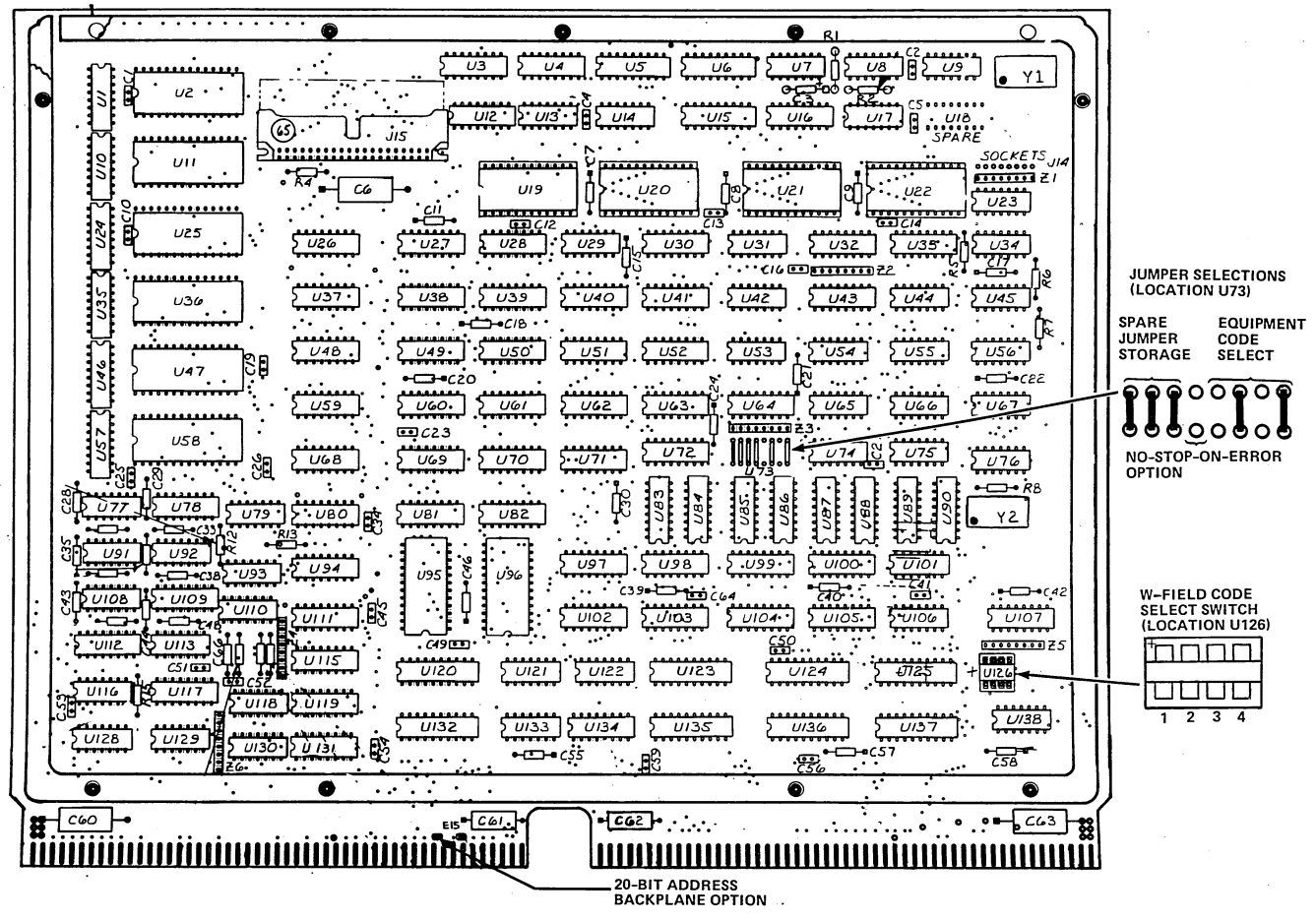

NOTE: + DEPRESSED INDICATES SWITCH ON (CLOSED)

Figure 25-7. BCLA PWA Component Locations

TABLE 25-1. W-FIELD NUMBER SELECT

W-Field Number (Q15 through Q11)†		Switch Position			
Hexadecimal Value (Q15 - Q12)	Binary Bits	S1	S2	S3	S4
0††	00000	Off	Off	Off	Off
1†††	00010	Off	Off	Off	On
2	00100	Off	Off	On	Off
3	00110	Off	Off	On	On
4	01000	Off	On	Off	Off
5	01010	Off	On	Off	On
6	01100	Off	On	On	Off
7	01110	Off	On	ON	On
8	10000	On	Off	Off	Off
9	10010	On	Off	Off	On
A	10100	On	Off	On	Off
B	10110	On	Off	On	On
C	11000	On	On	Off	Off
D	11010	On	On	Off	On
E	11100	On	On	On	Off
F	11110	On	On	On	On

†Bit 11 is always zero; it is hardwired to ground.

††Not a valid selection

†††Normal CYBER 18 configuration. Increase this value by 1 for each additional primary BCLA in multiple BCLA systems.

25-1). This table indicates the DIP switch settings for each of these W-field values. A switch setting of On (+ side depressed), as shown in figure 25-7, produces a logical 0. This logical 0 matches a logical 1 in the Q field. Set the switch to establish the desired W-field number.

EQUIPMENT NUMBER JUMPERS

An equipment number of 10 has been assigned for the BCLA in the CYBER 18 applications. This is established by inserting two jumper blocks at location U73 of the primary BCLA PWA. Refer to figure 25-7 and table 25-2 to verify that the jumpers are in the proper configuration.

NO STOP ON ERROR OPTION

The optional no-stop-on-error bit is selected by one jumper block at location U73 of the primary BCLA PWA. Table 25-3 defines the available options. Verify that the jumper configuration satisfies the system requirements.

20-BIT ADDRESS BACKPLANE

A jumper block near board location U132 is used with other configurations for the common controller portion of the BCLA printed wiring assembly. A jumper is installed at this location when the controller is used in a CPU with 20-bit addressing capability. The jumper must not be installed when the BCLA is used in a CYBER 18 CPU with 18-bit addressing capability (normal configuration).

SPARE JUMPERS

The three remaining jumper points at location U73 of the primary BCLA are reserved for future development and storage of spare jumper blocks. Removal or insertion of jumpers in these points has no effect on BCLA operation.

TABLE 25-2. EQUIPMENT CODE SELECT JUMPERS

Equipment Code (Q10 through Q07)		Jumper Condition (Location U73)			
Decimal Value	Binary Bits†	5-12	6-11	7-10	8-9
0	0000	In	In	In	In
1	0001	In	In	In	Out
2	0010	In	In	Out	In
3	0011	In	In	Out	Out
4	0100	In	Out	In	In
5	0101	In	Out	In	Out
6	0110	In	Out	Out	In
7	0111	In	Out	Out	Out
8	1000	Out	In	In	In
10††	1010	Out	In	Out	In
11	1011	Out	In	Out	Out
12	1100	Out	Out	In	In
13	1101	Out	Out	In	Out
14	1110	Out	Out	Out	In
15	1111	Out	Out	Out	Out

†In = Binary 0
Out = Binary 1

††Normal CYBER 18 configuration

TABLE 25-3. NO-STOP-ON-ERROR OPTION SELECTION

Jumper Configuration	Option Selected
Out (normal CYBER 18 configuration)	Break or framing error and/or lost data error causes an immediate buffer terminate.
In (special systems application only)	Only a normal receive terminate is in effect (EOT or buffer length). Errors are relected in the termination status word.

INTERRUPT WIRING

Each primary BCLA is capable of functioning as the master when multiple BCLAs are sharing the same macro interrupt line of the processor. Each primary BCLA generates an interrupt that is made available to the backplane at pin 249. In systems that contain more than one primary BCLA, this interrupt signal must be connected from the backplane of each primary BCLA, other than the master, to the master BCLA adapter board, as shown in figure 25-8. In all installations, pin 249 of the master primary BCLA backplane must be connected to the status mode interrupt pin on the processor backplane. For interrupt 10 in a CYBER 18 computer system, this connection is made to pin 74 of slot L. One jumper wire is provided with each primary BCLA to connect the required interrupt signals. Terminals E104 through E110 are located at the lower rear corner of the primary BCLA adapter board. These terminals are used only on the master primary BCLA adapter board.

PWA INSERTION

After the switch selections and interrupt and ribbon cable connections have been completed, the PWA is ready for insertion into the assigned slots. Refer to section 1 to determine the processor board slots assigned to the BCLA printed wiring assemblies, and proceed as follows:

1. Remove the right side panel of the processor cabinet if it has not been removed previously.
2. Release the two captive latches on the processor chassis cover and remove the cover.
3. If the installation includes an expansion BCLA, lay the two printed wiring assemblies on a clean, flat surface with the interface connectors facing up. Install the interface ribbon cable between the connectors at the front edge of the two boards.

CAUTION

The primary BCLA must be inserted in an A/Q-DMA slot; and the expansion BCLA must be inserted in an A/Q or unwired slot, with the components facing left.

4. Carefully insert the two controller boards, with the interface cable attached, into the chassis slot. Ensure that the interface cable remains securely attached. Make sure that the boards are properly seated in the upper and lower chassis guide rails.
5. Ensure that the boards are fully seated within the chassis backplane connector by applying firm thumb pressure at the upper and lower corners of the front edge of the board.
6. If an expansion BCLA is included in the installation, tuck any interface cable slack into the processor cage between the primary and expansion boards to allow clearance for the chassis cover plate.
7. Replace the chassis cover plate.
8. To complete the installation, replace the cabinet side panel and all other panels and covers removed.

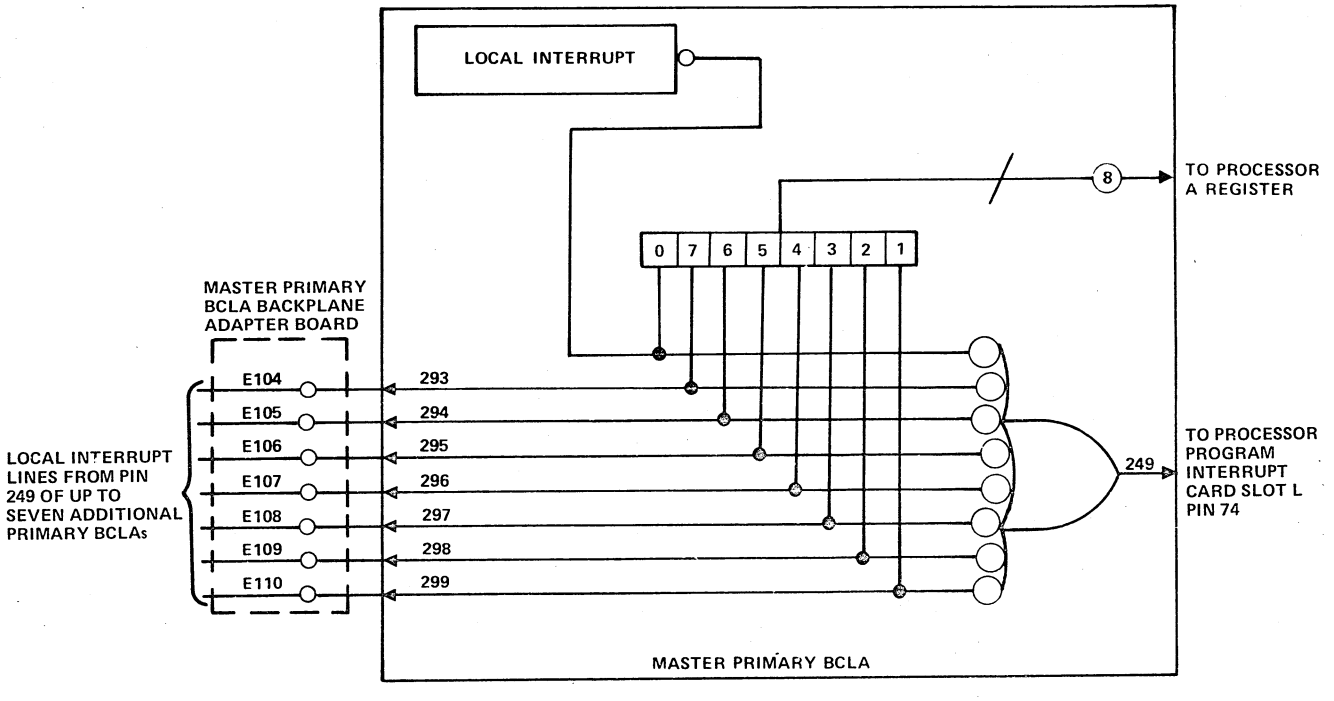

1007-1

Figure 25-8. BCLA Interrupt Wiring

DIAGNOSTIC TESTING

Perform the manual operating and diagnostic checks according to th diagnostic decision logic tables (DDLTs) described in the applicable subsystem field repair guide.

NOTE

The diagnostic tests and routines described in the subsystem field repair guide can be performed only after the processor, console display, and flexible disk drive (diagnostic load device) installations are complete.

The paper tape reader/paper tape punch/card punch subsystem consists of a one-board controller, a paper tape relay station, a paper tape reader device, a paper tape punch device, and a card punch device. The controller occupies one A/Q board slot (not wired for DMA) and plugs directly into the processor chassis and backplane. Power for the controller is obtained from the processor backplane and does not require an add-on power supply. The paper tape relay station mounts in a vertical cabinet on standard 19-inch (483-millimeter) RETMA rails.

The paper tape/card punch (PT/CP) controller is designed to communicate with the following devices:

- The Facit 4021 paper tape reader - A top-loaded, tabletop version, with or without a fan-folded tape-handler, and equipped with an SP1 interface
- The Facit 4022 paper tape reader - A front-loaded, rack version, with or without a fan-folded tape-handler, and equipped with an SP1 interface
- The Facit 4070 paper tape punch, equipped with an SP1 interface
- The CH101-A/B card punch

Figure 26-1 is a block diagram of the subsystem.

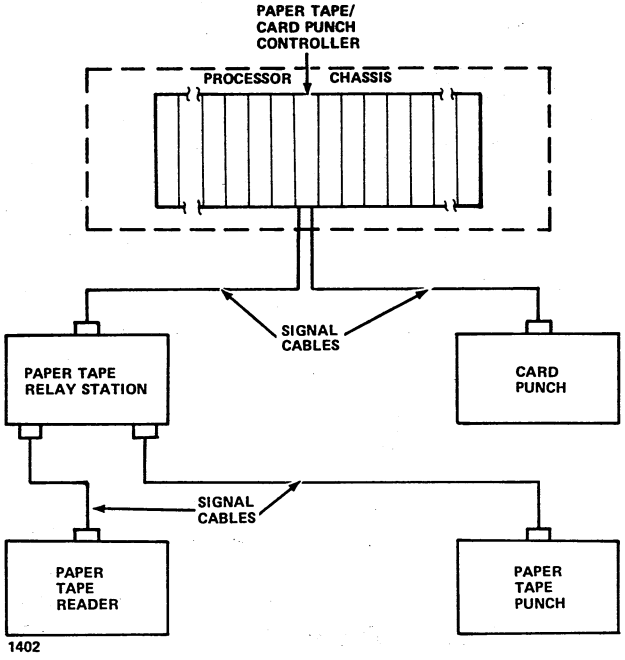

Figure 26-1. Paper Tape/Card Punch Subsystem Block Diagram

Installation and maintenance of the Facit reader and punch units are the responsibility of the customer. For technical problems pertaining to these devices, the Facit field service representative should be contacted. Sufficient data is contained in this section to accomplish the initial installation. Refer to the manuals supplied with the Facit devices for detailed installation requirements.

PARTS AND EQUIPMENT

Parts and Equipment	Equipment Number	Part Number
Paper tape/card punch controller	FE516-A or FE308-A	89600859 or 88951469
Paper tape relay station	DK609-A or DL103-A or DL103-B	89600917 or 88857547 or 88857586†
Cable assembly, controller to relay station	--	89604655 or 96721109†
Cable assembly, controller to card punch	--	89600669
Cable assembly, relay station to paper tape reader	--	89601258 or 96720188†
Cable assembly, relay station to paper tape punch	--	89601259 or 96720189†
Paper tape reader (rack-mounted version)	Facit 4022 (with SP1 interface)	--
Paper tape reader (tabletop version)	Facit 4021 (with SP1 interface)	--
Paper tape punch (rack-mounted version)	Facit 4070 with SP1 interface SP1 5117/0005)	--
Card punch	CH101-A/B	--

TEST EQUIPMENT

No special test equipment is required to install the paper tape/card punch equipment.

†These assemblies apply only to the DL103-B Paper Tape Relay Station.

UNCRATING

The paper tape and card punch equipment may be shipped in various configurations depending on system requirements. Refer to figure 26-2 for the different configurations.

The controller and relay station are shipped in heavy-duty cardboard cartons and buffered from shock and impact damage by an industrial filler. The card punch and tape device interface cables are coiled and secured within the controller shipping carton. No special instructions are required to remove these units or cables from their carton.

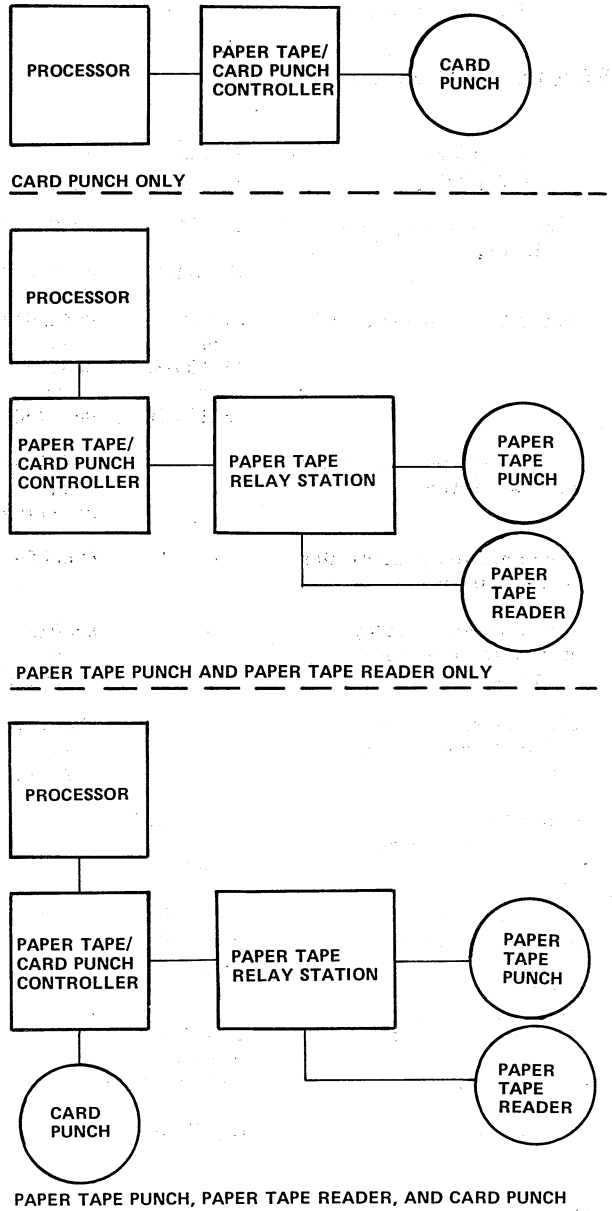

Figure 26-2. Paper Tape Subsystem Configurations

CAUTION

The card punch weighs approximately 500 pounds (255 kilograms). Special lifting equipment, such as a roller lift, is required to remove it from the shipping pallet. Do not use a fork lift.

Remove the shipping carton from the card punch, and remove the card punch from the shipping pallet. Remove the paper tape reader and punch tape punch from their cartons. Refer to the manuals supplied with these devices to complete the uncrating.

CRATING

Refer to the uncrating procedure above and the manuals supplied with each device for crating the items.

INSPECTION

Refer to the Facit service manual for initial inspection requirements for the paper tape reader and paper tape punch. Record all damage and/or missing parts, and contact a local Facit service representative if any problems are encountered.

Inspect the card punch for external damage, missing parts, and missing documentation. Record all discrepancies. While referring to the field service manual supplied with the device, open the hinged front and top panels; remove the side panels and rear panel. The side and rear panels are secured from inside the unit by one-quarter-turn fasteners, which are accessible through the top and front access panels. Remove all shipping blocks, retaining straps, and packing material. Inspect the unit, and record all noted damage.

Inspect the relay station and controller for obvious damage, loose or missing parts, dents, and cracks to the printed wiring assembly. Inspect the interface cable connector plugs for possible bent, broken, or missing pieces and the cable insulation for cuts and loose wires.

PRIMARY POWER PREPARATION

Both the paper tape reader and paper tape punch require a single-phase ac power input. A selector switch is provided on the units that must be matched to the site voltage. The voltage settings available are as follows:

Voltage	Tolerance
100 V ac	+15%, -10%
115 V ac	+15%, -10%
220 V ac	+15%, -10%
240 V ac	+15%, -10%

Determine the site voltage, and set the dials to the required values. The frequency may range from 49 to 100 Hz. A power cord is provided with each unit to facilitate connection to a convenience outlet. The power cord connector may have to be changed to accommodate the customer convenience outlet. When installed in the vertical equipment cabinet, the paper tape reader, paper tape punch, and relay station power cords are connected to the convenience outlets on the power distribution box at the base of the cabinet.

The card punch is manufactured as either a 60 or 50 Hz unit. If the primary input power does not meet the following requirements, an isolation transformer is required to accommodate the input voltage. (The isolation transformer is supplied as an option.)

60 Hz (+0.6 Hz, -1.0 Hz), 120 V ac (104 through 127 V ac), 10 amperes (maximum)

50 Hz (+0.5 Hz, -1.0 Hz), 127 V ac (115 through 136 V ac), 12 amperes (maximum)

700 watts

3380 Btu/hr

The input power connection to the card punch is at terminal board A13 TB1, located in the distribution panel. The provisioning of a power cord for the card punch is a site requirement. The cord is to be routed through the cutout in the base of the unit under the distribution panel, and up through the circular hole in the base of the distribution panel. The cord is hardwired to A13 TB1 as shown in figure 26-3. After the cord is wired to the terminal board, the clamp on the underside of the relay box should be tightened around the cord. Ensure that slack exists in the cord between the clamp and the terminal board.

NOTE

Avoid positioning the I/O cable adjacent to the power cord. Position cables at right angles to each other when possible.

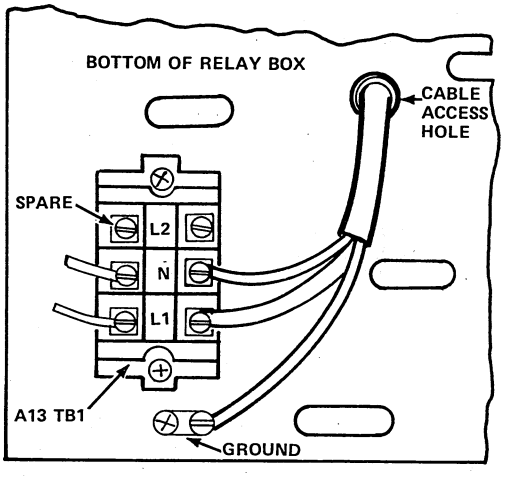

Figure 26-3. Card Punch Power Card Connection

The circuit breaker for primary power, the blowers, the drive motor, and the +5 V and +24 V power supplies are located at the rear of the card punch unit. The rear panel must be removed to gain access to the circuit breakers.

WIRING/JUMPER VERIFICATION

Controller jumpers, processor backplane wiring, and a jumper plug configuration must be verified before system operation.

CONTROLLER JUMPERS

Refer to table 26-1 to establish the proper jumper configuration for the paper tape/card punch controller. Refer to section 22 for location of jumper facilities.

TABLE 26-1. CONTROLLER JUMPER SETTINGS

Jumper Name	Condition
Q07	Out
Q08	In
Q09	Out
Q10	Out
JM	In
SB	In
BP	Out
UPO	In (if device is protected) Out (if device is not protected)
ALD SD0 through SD3 UP1 through UP3	Not used for paper tape and card punch applications. May be in or out.

BACKPLANE WIRING

The interrupt line is selected by way of a backplane wire connection between the paper tape/card punch controller slot and the status mode interrupt board slot. Refer to sections 1 and 20 for board slot assignment and interrupt wiring details.

The pins listed in table 26-2 must not be wired to the slot occupied by the paper tape/card punch controller. If present, these lines must be removed before system operation.

PAPER TAPE PUNCH

For tape-low and tape-tight/ruptured detection, two jumpers must be installed in a customer-supplied, 25-pin Cannon connector, which is then installed at connector P1 of the paper tape punch.

For tape-low detection, solder-jumper pins 10 and 21 in the Cannon connector.

TABLE 26-2. BACKPLANE WIRE DELETIONS

Pin Number	Signal Name
16	DS-SWNC
20	DS-SWNO
21	SETSM204/
27	TMGP
41	DS-DATA/
44	DEADSTART/
49	RPINTxx/
50	RDINTxx/
250	RDINTxx/
293	EXSTOP/
294	EXMC/
295	EXGO

For tape-tight/ruptured detection, solder-jumper pins 18 and 20 in the Cannon connector.

After soldering the jumpers into the connector, install the connector onto P1 of the card punch, which is located on the left side of the card punch as viewed from the rear.

INSTALLATION

PAPER TAPE DEVICES

The paper tape punch, paper tape reader, and relay station are designed to be mounted in a 19-inch (483-millimeter) RETMA cabinet. Install the devices in the cabinet using the mounting kits and instructions provided with the units.

CARD PUNCH

A minimum clearance of 3 feet (0.9 meters) is recommended between the card punch and associated equipment. The maximum distance between the card punch and the processor enclosure is restricted by the 15-foot (4.6-meter) interface cable and interface cable routing.

CONTROLLER INSERTION

If the controller was shipped installed in the processor, it must be removed to verify the jumper settings. If the controller was shipped separately, verify the jumper settings prior to installing the board in the processor. Proceed as follows:

1. Open the processor cabinet side access panel.
2. Remove the chassis cover plate by turning the two captive latches on the bottom of the plate one-quarter turn counterclockwise.
3. Using the extractor tool located on the cover plate, remove the controller board from its assigned slot (refer to sections 1 and 20).

After verifying the board jumpers, install the board in the assigned chassis slot, ensuring that the components on the board are facing left. Apply firm thumb pressure at the upper and lower corners of the board until the board is well seated into the chassis backplane connector. Replace the chassis cover plate and processor side panel.

SIGNAL CABLING

Figure 26-4 illustrates the connection of the interface cables between the controller backplane slot and the relay station and devices. Install the cables as follows, ensuring that the cable shield is properly grounded.

1. Connect the interface cable between the processor backplane and the paper tape relay station located in the vertical cabinet. Ensure that the backplane pins correspond to the connector pin numbers. Refer to the connector detail in figure 26-5.
2. Ground the cable shield at the processor cabinet as shown in the grounding detail of figure 26-4.
3. Connect the paper tape reader and paper tape punch signal cables between the devices and the relay station. Attach the ends of the signal cable shield ground straps to the ground terminals at the relay station.
4. Connect the interface cable from the processor backplane to the card punch. Ensure that the backplane pins correspond to the connector pin numbers as shown in figure 26-5.
5. Ground the cable shield at the processor cabinet as shown in the grounding detail of figure 26-4.
6. Connect the card punch end of the cable shield ground strap to the E1 ground lug on the base of the card punch immediately below the data I/O connector.

POWER CABLING

Refer to figure 26-4 for details on connecting the input power cords of the paper tape and card punch devices and the relay station. Compare the unit name plate power ratings with the available site power source before connecting the units to the power source.

POWER APPLICATION AND PRELIMINARY CHECKOUT

Apply power to the processor, and proceed with the preliminary checkout of the newly installed devices.

PAPER TAPE PUNCH

Connect the paper tape punch power cord to the primary power source. Load the punch with a supply reel of paper

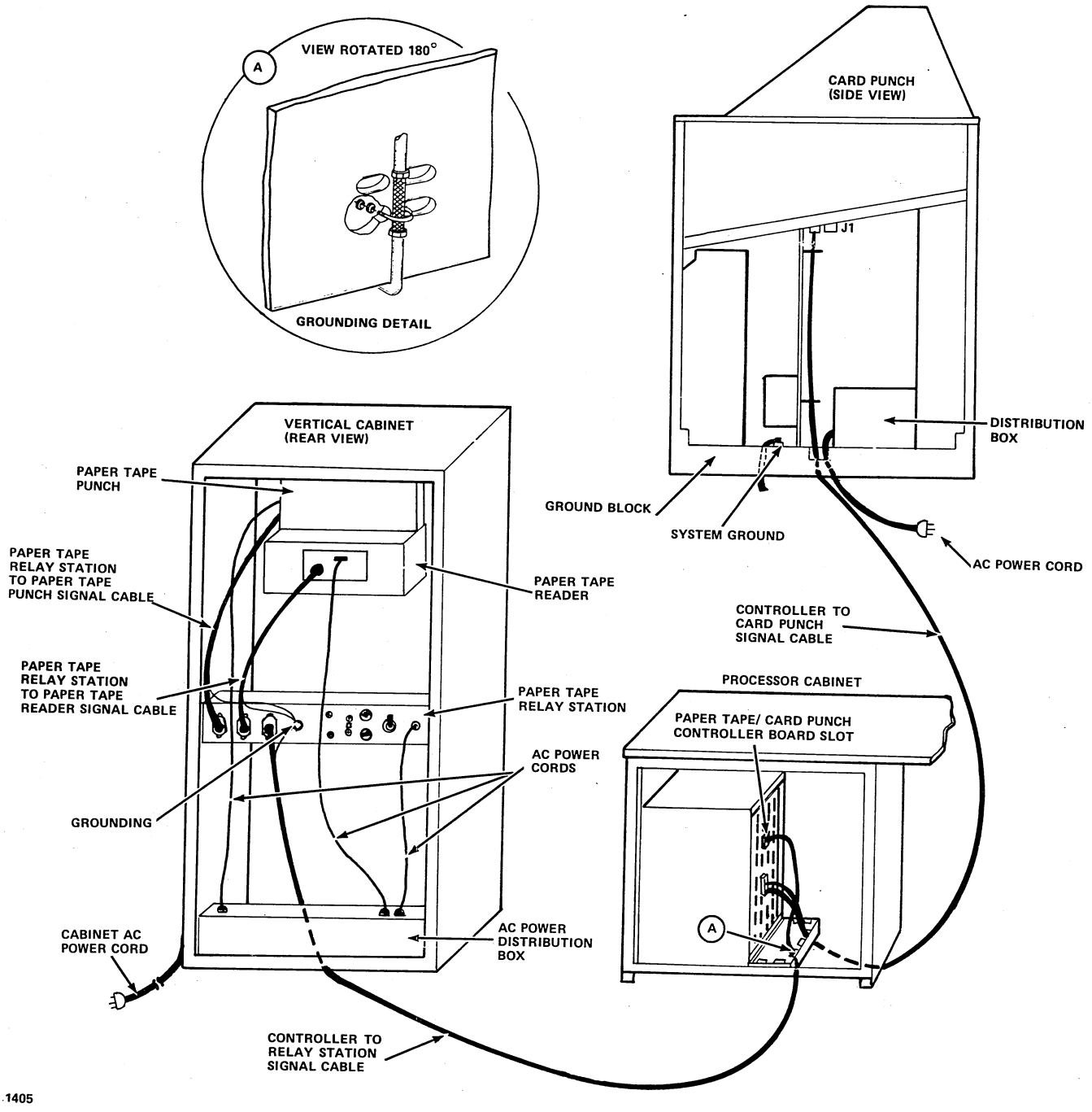

Figure 26-4. Signal and Power Cable Connections

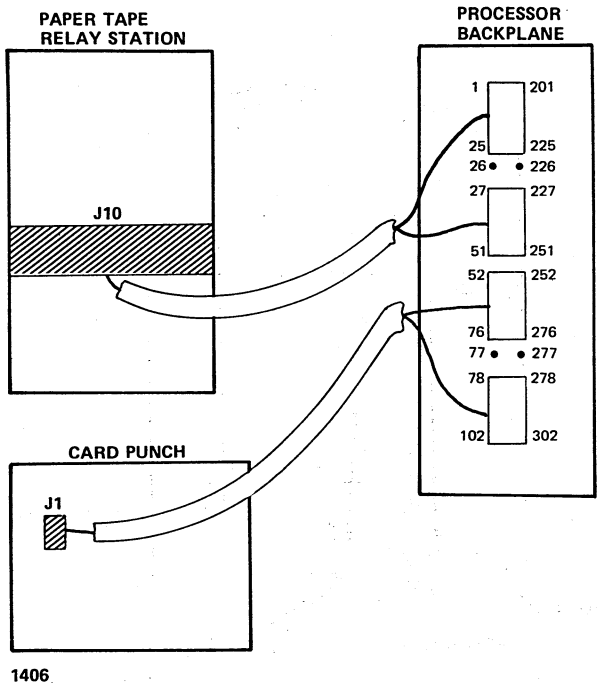

Figure 26-5. Controller Backplane Pin Assignments

tape. Thread the paper tape through the punch to the output take-up reel. Turn on the ac power. Depress the DC ON and FORWARD switches. Check the tape tracking and reel operations. Depress the FEED HOLES switch, and verify that sprocket holes are being punched. Depress the CODE HOLES switch, and verify that all 1's are punched in the tape. Depress the FEED HOLES switch to produce a few inches of leader.

Note whether the ERROR light and TAPE LOW light are out and whether the READY light is on at the end of the preceding operations. If the ERROR light is on, check the threading of the tape. If the TAPE LOW light is on, check the switch on the tape-low lever. If the READY light is not on, a fuse may be blown. Refer to the punch service manual, and/or contact a Facit service representative.

PAPER TAPE READER

Connect the paper tape reader power cord to the primary power source. Turn ac power on with the AC ON switch. Set the thumbwheel switch to the appropriate settings, and position the tape guides for the desired tape width (usually level 8). Load a prepunched paper tape into the reader. Ensure that the tape has a proper leader and that sprocket holes are punched. Ensure that the sprocket holes are correctly positioned. When loading the tape, align the sprocket holes so that they are between the third and forth tracks from the front of the reader; latch the lid. Depress the START switch. The tape should jog forward one sprocket and stop. The ERROR light should extinguish. If the ERROR light does not clear, check the tape threading and lid latch. If the ERROR light cannot be cleared, contact a Facit service representative.

PAPER TAPE RELAY STATION

If both a paper tape reader and a paper tape punch are included in the system, connect the relay station power cord to the primary power source. Load a prepunched tape on the reader, and select the ON LINE position on the switch located on the front panel of the relay station. Ready the reader and punch for operation, and select the COPY position on the front panel of the relay station. The paper tape punch copies the tape mounted on the paper tape reader.

CARD PUNCH

Connect the card punch power cord to the primary power source. Place all circuit breakers in the ON position. Depress the power switch. Using a VOM or DVM, check the card punch +5 V and +24 V dc power supply outputs. Adjust the outputs if necessary.

The +5 V dc power supply should be set at +5.0 $\pm$0.1 V dc. The voltage is measured at TB01-2 (common) of the power supply and is adjusted by the potentiometer on the back of the upper power supply.

The +24 V dc power supply should be set at +24.0 $\pm$0.1 V dc. The voltage is measured at TB01-3 and $\overline{\text{TB01-4}}$ (common) of the power supply and is adjusted by the potentiometer on the back of the lower power supply.

Refer to the card punch maintenance manual, and place the unit in the offline (STANDBY) mode. Feed 10 cards, and check for card motion along the transport and for damage to the cards. Refer to table 26-3 for operational testing of switches and lamps on the punch control panel and table 26-4 for operational testing with test cards.

OFFLINE TESTING

After connecting the paper tape/card punch controller to the system devices, use the switch located at the front edge of the controller board to enable offline testing. In the ON position, the controller is connected to the processor and operates in the normal mode. Setting the switch to OFF disconnects the controller from the processor and enables offline testing in the maintenance mode.

The type of offline operation to be performed is a function of the four-position switch located on the controller board adjacent to the online switch. Table 26-5 lists the available offline operations that may be selected. The offline switches are functional only when the online switch is in the OFF position. Switch 4 of the four-position switch has no function for paper tape/card punch applications.

DIAGNOSTIC TESTING

Perform the following diagnostic tests to complete the subsystem installation:

- ODS Level I - PTRP1 (all sections)
- ODS Level II - PTRP2 (all sections)

NOTE

The diagnostic tests and routines described in the ODS reference manual and the system hardware maintenance manual can be performed only after the console display, processor, and flexible disk drive or tape cassette (diagnostic load device) installations have been completed.

TABLE 26-3. CARD PUNCH CONTROL FUNCTIONS

Switch/Indicator	Operator Procedure	Expected Results
POWER switch/indicator	Turn POWER switch off.	POWER is extinguished.
	Turn POWER switch on.	POWER illuminates.
READY switch/indicator	Place card in input hopper. Touch READY.	READY illuminates.
STANDBY switch/indicator	Touch STANDBY.	STANDBY illuminates.
	Touch READY.	READY illuminates; STANDBY is extinguished.
FEED/JAM switch/indicator	Touch STANDBY. Without cards, touch FEED.	Motor cycles and JAM illuminates.
CLEAR switch	Touch CLEAR.	JAM extinguishes.
PUNCH INHIBIT switch/ indicator	Touch PUNCH INHIBIT.	PUNCH INHIBIT illuminates.
	Touch PUNCH INHIBIT again.	PUNCH INHIBIT extinguishes.
INTERLOCK indicator	Lift top lid.	INTERLOCK indicator illuminates.
	Close lid.	INTERLOCK indicator extinguishes.
TEST MODE switch TEST MODE indicator	Touch STANDBY. Open the front door, and depress the TEST MODE switch on the mode card.	TEST MODE indicator illuminates.
	Push up on TEST MODE switch	TEST MODE indicator extinguishes.
COMPARE ALERT indicator	None	No external means exist to force a compare alert.

TABLE 26-4. TEST CARD CONDITIONS

Switch	Operator Procedure	Expected Results
TEST Mode	Fill input hopper with cards. Press TEST switch to on.	Motor turns on.
STOP/GO	Select some number of columns other than 80 (less then 82), and push switch to GO.	Cards feed, and holes are punched in the selected columns.
	Push switch to STOP.	Process stops.
Column switches	Number of columns = 80 1 = OFF 0 = ON Set FULL to ON.	Cards are punched in all rows through number of columns.
	Push STOP.	Process stops.
Pattern select alternate	Select columns to 80. Set FULL to OFF. Set alternale to ON. Push GO.	Cards are punched with alternate column in each row and adjacent rows offset by one.
	Push STOP.	Process stops.
Rotate pattern	Set alternate to OFF. Set rotate to ON. Push GO.	Rotating pattern is punched.
	Push STOP.	Process stops.
Full	Set full to ON. Set alternale to OFF. Set rotate to OFF.	Test is complete.

TABLE 26-5. OFFLINE TEST SWITCH SELECTION

MS3	MS2	MS1	Offline Operation Performed
1	0	0	Paper tape punch triangular data pattern
1	0	1	Paper tape reader backward motion
1	1	0	Paper tape reader forward motion

This section details the requirements for installing the power conversion unit inside the CYBER 18 processor cabinet. This unit is required when site power for the CYBER 18 system is greater than 127 V ac with a frequency of 48 Hz to 63 Hz. Table 27-1 lists the input voltage levels that can be accommodated by the power conversion unit.

PARTS AND EQUIPMENT

Parts and Equipment	Equipment Number	Part Number
Power conversion transformer	GK203-A	96752572

The power conversion unit includes all the parts and documentation necessary to install the unit into a CYBER 18 processor cabinet. The documentation includes a parts list, wiring diagram, physical layout diagram, and installation instructions for the unit.

A single-phase power plug compatible with the site 10 ampere power source receptacle is required to accomplish the installation. This plug is to be obtained at the site in compliance with local electrical codes.

TOOLS AND EQUIPMENT

One each of the following tools is required to install the power conversion unit:

- Screwdriver, Phillips, 10-inch)3/16-inch blade)
- Screwdriver, Phillips, 2-inch (3/16-inch blade)
- Screwdriver, common, 4-inch (1/4-inch blade)
- Nut driver, 1/4-inch
- Nut driver, 3/16-inch
- Ac voltmeter

UNCRATING

The power conversion unit is shipped packed into a heavy-duty cardboard carton. It is buffered from shock and impact damage by industrial filler. Unpackage the unit as follows:

1. Open the shipping carton with care to avoid damage to the contents.
2. Separate the packing material from the parts.
3. Locate the documentation package.
4. Using the assembly parts list, inventory the parts.
5. Inspect the parts for obvious damage.

CRATING

Refer to the above uncrating instructions for crating the unit.

INSTALLATION

The mechanical and electrical installation must be performed sequentially as follows:

1. Power down the processor, and disconnect the power plug from the site power source.
2. Test the site primary power to determine the range of input power (220/240 V ac) available. Record the value to aid in later connection of the transformer.
3. Remove the outer cabinet skins, and open the panels necessary to gain access to the processor power distribution box. Refer to figure 27-1.
4. Remove the existing power distribution box cover.
5. Remove the existing power cord from the processor.

TABLE 27-1. PROCESSOR POWER CONVERSION UNIT TRANSFORMER INPUT/OUTPUT CONNECTIONS

Input Voltage		Output Voltage	
Range	Terminals	Range	Terminals
198 V to 235 V (220 V ac nominal)	Jumper - 3 to 4 Input - 1 and 5	104 V to 127 V (120 V ac nominal)	7 and 8
216 V to 257 V (240 V ac nominal)	Jumper - 3 to 4 Input - 1 and 6	104 V to 127 V (120 V ac nominal)	7 and 8

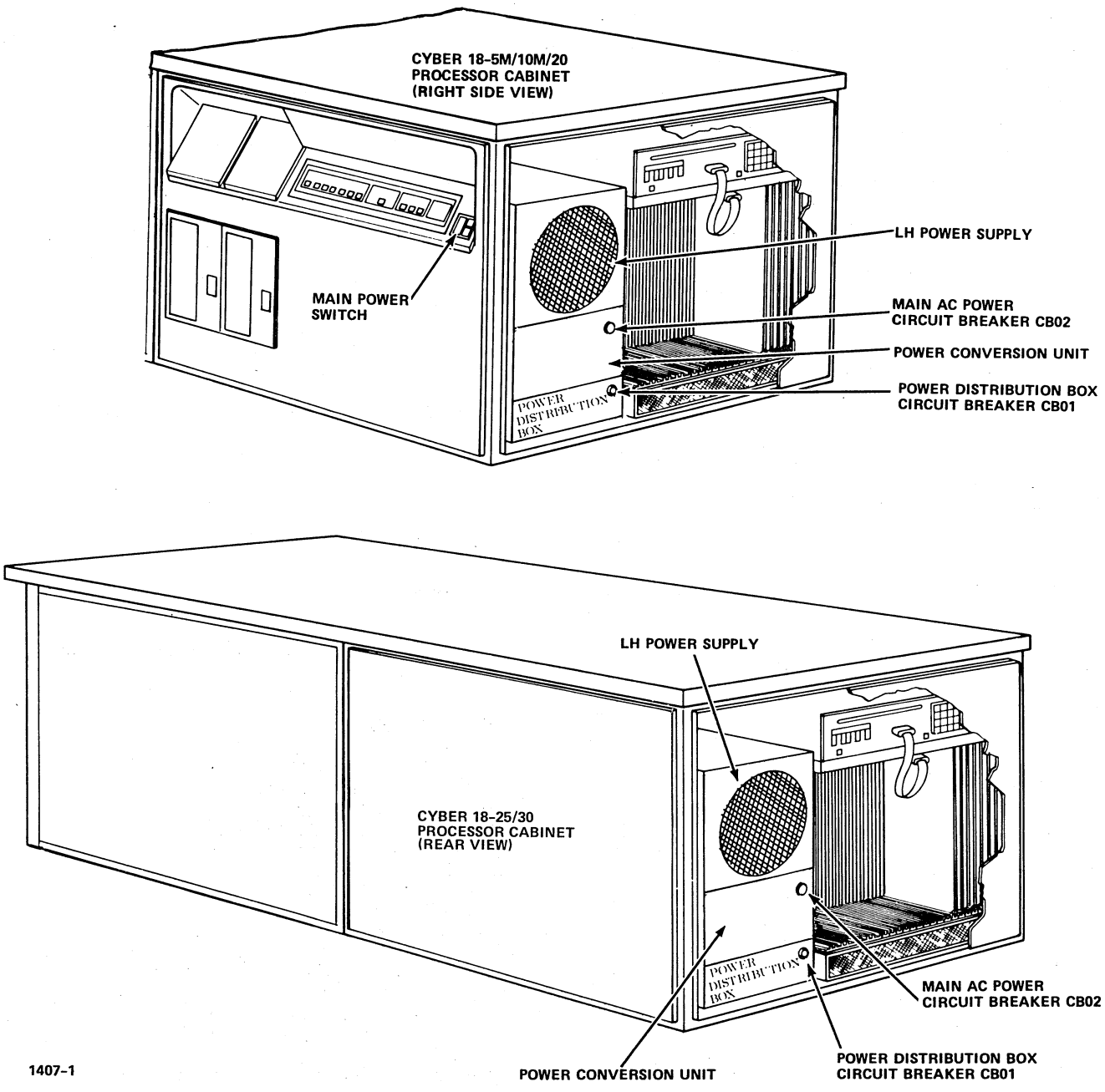

Figure 27-1. Processor Chassis Equipment Locations

6. While referring to figure 27-2, locate the existing line filter (part number 96755778) in the power distribution box. Mark and disconnect the load and line fast-on connectors from the filter. Remove the filter. It may be necessary to remove the power distribution box breaker (CB01) to enable removal of the filter.

7. Install the new line filter (part number 96755017) using the screws retained from step 6. Reconnect the load and line wires. Reinstall the circuit breaker it it was removed in step 6.

8. Route the lugged ends of the new power cord assembly (part number 96752567) through the existing cable clamp in the bottom of the power distribution box. Do not tighten the clamp at this time.

9. Locate the 16-inch (406-millimeter) transformer output cable (part number 96752565). Connect the tinned ends of the cable to the power input block (TB02) where the original power cord was removed. Refer to figure 27-3.

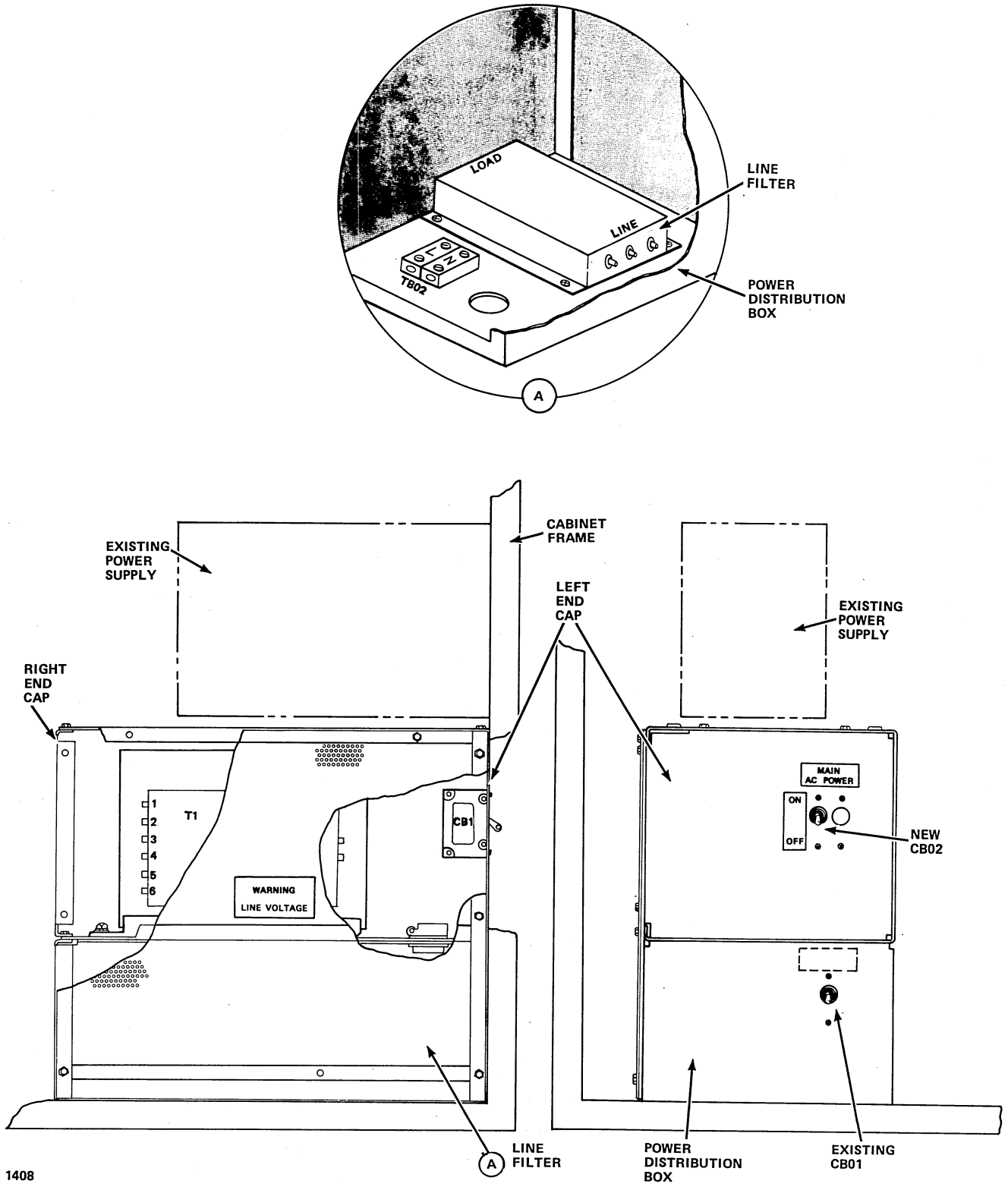

Figure 27-2. Processor Power Conversion Transformer Installation

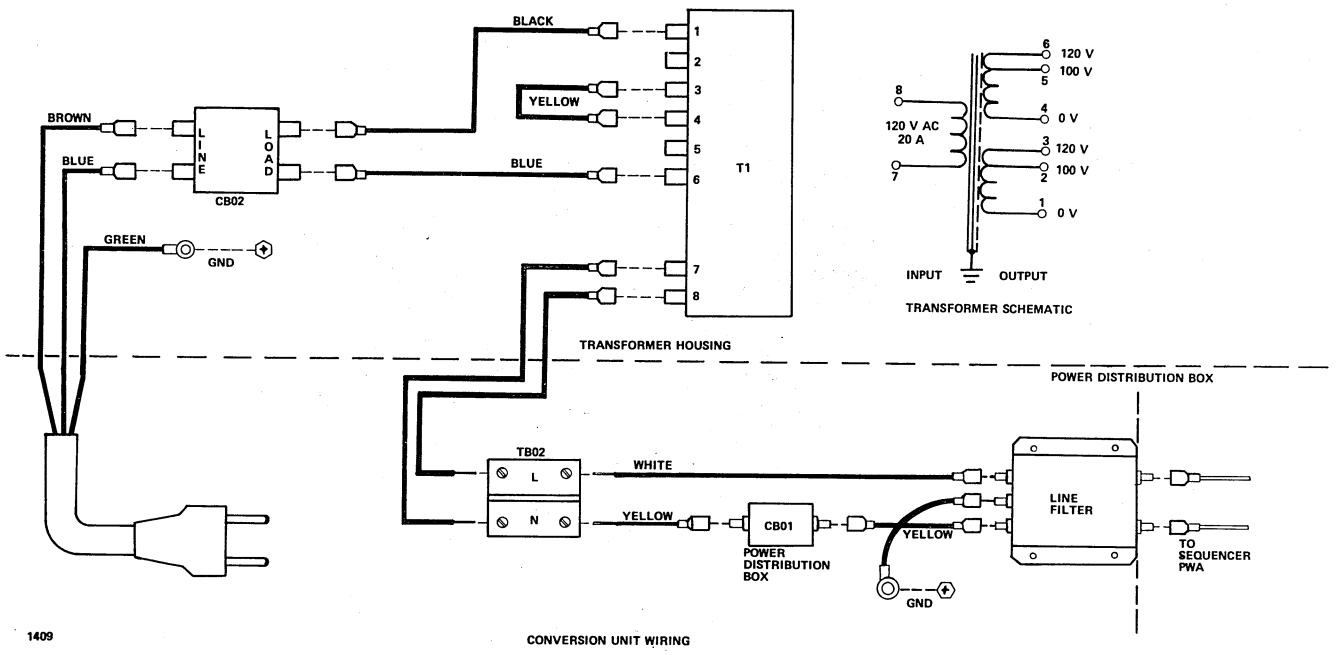

Figure 27-3. Processor Power Conversion Unit Wiring Diagram

10. Position the transformer channel cover (part number 96752775) over the power distribution box with the open side facing out. Install two no. 6 screws (part number 96744965) in the back bottom of the channel. Refer to figure 27-1 for relative location.

11. Position the transformer (part number 96751135) inside the channel cover as shown in figure 27-2. Secure the transformer using four each of the following: 10/32 pan-head Phillips screws, spring lock washers, and no. 10 plain washers (part numbers 10127142, 10125805, and 10125607, respectively).

12. Install the two conduit clamps (part numbers 24518104) in the bottom of the transformer channel cover. Route the loose end of the transformer output cables (see step 9) through one of the conduit clamps, and connect the wires to terminals 7 and 8 of the transformer. No lead polarity is required. Tighten this conduit clamp.

13. Route the lugged end of the new power cord cable assembly (see step 8) through the remaining conduit clamp. Ensure that approximately 1/2 inch (13 millimeters) of the outer jacket insulation extends above the clamp. Tighten this clamp and the clamp in the power distribution box.

14. Using an 8/32 thread-roll screw (part number 96744973) and an external-tooth lock washer (part number 10126402), connect the power cord ground lead (green/yellow) to the channel cover at the hole marked GND.

15. Attach one end of the 24-inch (610-millimeter) transformer input cable (part number 96752566) to transformer input terminals 1 and 5 (220 V ac) or 1 and 6 (240 V ac). Refer to table 27-1 and step 2. Direct the loose end of the cable behind the transformer and toward the circuit breaker at the left end of the channel cover. Install the 6-inch (152-millimeter) jumper cable (part number 96752564) between terminals 3 and 4 of the transformer.

16. Start four 6/32 thread-roll screws (part number 96744965) into the holes at the bottom ends of the channel cover (two screws at each end).

17. Place the right end cap (part number 96752569) in position (on the left end of the channel as viewed from the front of the processor cabinet), and tighten the two lower screws via the access holes in the top of the housing. Using two more 6/32 thread-roll screws (part number 96744965), secure the top of the end cap to the channel.

18. Secure the circuit breaker (part number 39468815) to the inside of the left end cap (part number 96752568) with four each of the following: 6/32 pan-head Phillips screws, no. 6 flat washers, and spring lock washers (part numbers 10127112, 38829401, and 10125803, respectively). Refer to figure 27-2 to identify the correct cutout for the circuit breaker.

19. Connect the lugged ends of the power cord assembly (step 13) to the top (LINE) terminals of the circuit breaker. Connect the loose ends of the transformer input cable (step 13) to the bottom (LOAD) terminals of the circuit breaker. Refer to figure 27-3, and maintain the proper line and neutral polarity.

20. Place the left end cap, with the circuit breaker and attach wiring, into place on the channel cover. Tighten the bottom screws via the access holes in the top of the housing. Use one 6/32 thread-roll screw (part number 96744965) to secure the end cap to the channel at the top rear of the housing.

21. Verify that the electrical connections of the transformer agree with those shown in figure 27-3 and and table 27-1.

    Install the locally obtained power plug on the remaining end of the power cord. The shield drain wire and the green/yellow wire should both be connected to the ground connection of the plug. The brown wire should be connected to the line connection and the blue wire connected to the neutral connection of the power plug.

22. Connect the power cord to the site power receptacle. Turn on circuit breaker CB02 on the transformer housing. Measure the primary and secondary voltages at the transformer terminals. If the voltages are not as specified, power down, change the transformer connections accordingly, and/or correct the problem.

23. Power down the unit by placing CB02 on the transformer housing off.

24. Attach the warning plate (part number 24547539) to the bottom of the channel cover in front of the transformer as shown in figure 27-2.

25. Place the power distribution box/transformer housing cover (part number 96752729) into position, and secure it with eleven 6/32 thread-roll screws (part number 96744965).

26. Attach the warning plate (part number 24547502), main ac power label (part number 39472205), and on/off label (part number 39472206) to the power distribution box/transformer housing cover. Remove the main ac power label from CB01 on the power distribution box. Refer to figure 27-2.

27. Install the six hole plugs (part number 94305542) in the screwdriver access holes in the top of the channel cover.

28. Turn on CB01 on the power distribution box and CB02 on the transformer housing.

29. Reinstall all covers and panels previously removed to accomplish the transformer installation.

DIAGNOSTIC TESTING

After installing the power conversion unit, proceed with the system installation and checkout. Run system and processor diagnostic tests as required to verify satisfactory operation.

NOTE

The diagnostic tests and routines described in the system hardware maintenance manual can be performed only after the console display, the processor, and the flexible disk drive or the tape cassette (diagnostic load device) installations have been completed.

MAGNETIC TAPE TRANSPORT POWER CONVERSION UNIT 28

This section details the requirements for installing the power conversion unit inside the CYBER 18 magnetic tape transport cabinet. This unit is required when site power for the CYBER 18 system is greater than 127 V ac with a frequency of 48 Hz to 63 Hz. Table 28-1 lists the input voltage levels that can be accommodated by the power conversion unit.

PARTS AND EQUIPMENT

Parts and Equipment	Equipment Number	Part Number
Power conversion transformer	GK205-A	96752905

The power conversion unit includes all the parts and documentation necessary to install the unit into a CYBER 18 magnetic tape transport cabinet. The documentation includes a parts list, wiring diagram, physical layout diagram, and installation instructions for the unit.

A single-phase power plug compatible with the site 10 ampere power source receptacle is required to accomplish the installation. This plug is to be obtained at the site in compliance with local electrical codes.

TOOLS AND EQUIPMENT

One each of the following tools is required to install the power conversion unit:

- Screwdriver, Phillips, 10-inch (3/16-inch blade)
- Screwdriver, Phillips, 2-inch (3/16-inch blade)
- Screwdriver, common, 4-inch (1/4-inch blade)
- Nut driver, 1/4-inch
- Nut driver, 3/16-inch
- AC voltmeter

UNCRATING

The power conversion unit is shipped packed into a heavy-duty cardboard carton. It is buffered from shock and impact damage by industrial filler. Unpackage the unit as follows:

1. Open the shipping carton with care to avoid damage to the contents.
2. Separate the packing material from the parts.
3. Locate the documentation package.
4. Using the assembly parts list, inventory the parts.
5. Inspect the parts for obvious damage.

CRATING

Refer to the above uncrating instructions for crating the unit.

INSTALLATION

The mechanical and electrical installation must be performed sequentially as follows. Figure 28-1 shows the location of the power conversion unit in the cabinet; figure 28-2 illustrates the installation of the power conversion unit.

1. Power down the tape units, and disconnect the cabinet power plug from the site power source.
2. Test the site primary power to determine the range of input power (220/240 V ac) available. Record the value to aid in later connection of the transformer.

TABLE 28-1. MAGNETIC TAPE TRANSPORT POWER CONVERSION UNIT TRANSFORMER INPUT/OUTPUT CONNECTIONS

Input Voltage		Output Voltage	
Range	Terminals	Range	Terminals
198 V to 235 V (220 V ac nominal)	Jumper - 3 to 4 Input - 1 and 5	104 V to 127 V (120 V ac nominal)	7 and 8
216 V to 257 V (240 V ac nominal)	Jumper - 3 to 4 Input - 1 and 6	104 V to 127 V (120 V ac nominal)	7 and 8

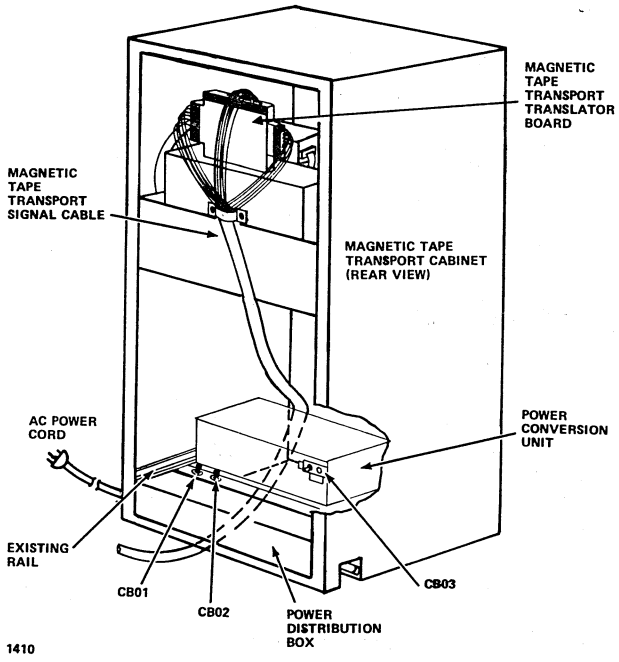

Figure 28-1. Power Conversion Unit Location

3. Open the cabinet doors necessary to gain access to the power distribution box.

4. Remove the power distribution box cover. Retain the cover and screws for later reinstallation.

5. Remove the existing power cord from the cabinet.

6. Place the frame support (part number 96752906) and two shims (part number 96752909) in position at the bottom of the cabinet on the lower horizontal rail and forward of the power distribution box. Secure the shims and support to the rail using four each of the following: hex-head cap screws, spring lock washers, plain washers, and spring nuts (part numbers, 10126506, 10125806, 10125608, and 39005406, respectively). Refer to figure 28-2. Allow sufficient clearance to route data cables behind the power conversion transformer housing as shown in figure 28-1.

7. Place the transformer (part number 96751135) inside the transformer channel cover (part number 96752775). Secure the transformer to the channel with four each of the following: pan-head Phillips screws, spring lock washers, and plain washers (part number 10127142, 10125805, and 10125607, respectively).

8. Attach the lugged 90-degree end fittings of the flexible conduit power cord cable assembly (part number 96752910) and the 42-inch (1067-millimeter) power conversion transformer output cable assembly (part number 96752923) to the bottom of the transformer channel cover.

NOTE

Ensure that the magnetic tape transport data cables and other cables are installed and terminated on the U-bolt grounding bar. Allow sufficient cable slack to mount the transformer housing.

9. Place the channel cover, with the transformer and cable assemblies attached, atop the frame support with the cables extended downward through the center of the frame support and to the left. Refer to figure 28-2 for cable routing. Route the cables through the cable entry bulkhead on the underside of the power distribution box.

10. Start two thread-roll screws (part number 96744973) one to two turns into one end of the frame support. Position two slots of one end of the channel cover around these screws. Do not tighten the screws at this time.

11. Start two thread-roll screws (part number 96744973) one to two turns into the other two holes of the frame support and channel cover slots. Do not tighten the screws at this time.

12. Connect one end of the 24-inch (610-millimeter) transformer input cable (part number 96752566) to transformer primary terminals 1 and 5 (220 V ac) or 1 and 6 (240 V ac). Refer to step 2 and table 28-1. Install the 6-inch (152-millimeter) jumper (part number 96752564) between terminals 3 and 4 of the transformer. Route the input cable leads behind the transformer and to the right (as viewed from the rear) toward the circuit breaker cutout.

13. Connect the loose end of the power conversion transformer output cable (installed in step 8) to terminals 7 and 8 of the transformer. No polarity is required.

14. Attach the power cord ground tab to the GND hole in the bottom of the channel cover using one 8/32 thread-roll screw (part number 96744973) and one external-tooth lock washer (part number 10126402).

15. Attach circuit breaker CB03 (part number 39468815) to the right end cap (part number 96752911) using four each of the following: 6/32 pan-head Phillips screws, spring lock washers, and flat washers (part numbers 10127112, 10125803, and 38829401, respectively).

    Refer to figure 28-2 for proper circuit breaker orientation.

16. Install the left end cap (part number 96752912) into the transformer housing, engaging the screws installed in step 10. Tighten the lower screws via the access holes in the top of the housing. Secure the top of the end cap to the top of the housing using two 6/32 thread-roll screws (part number 96744965).

17. Place the right end cap, with the circuit breaker installed, near the right end of the transformer

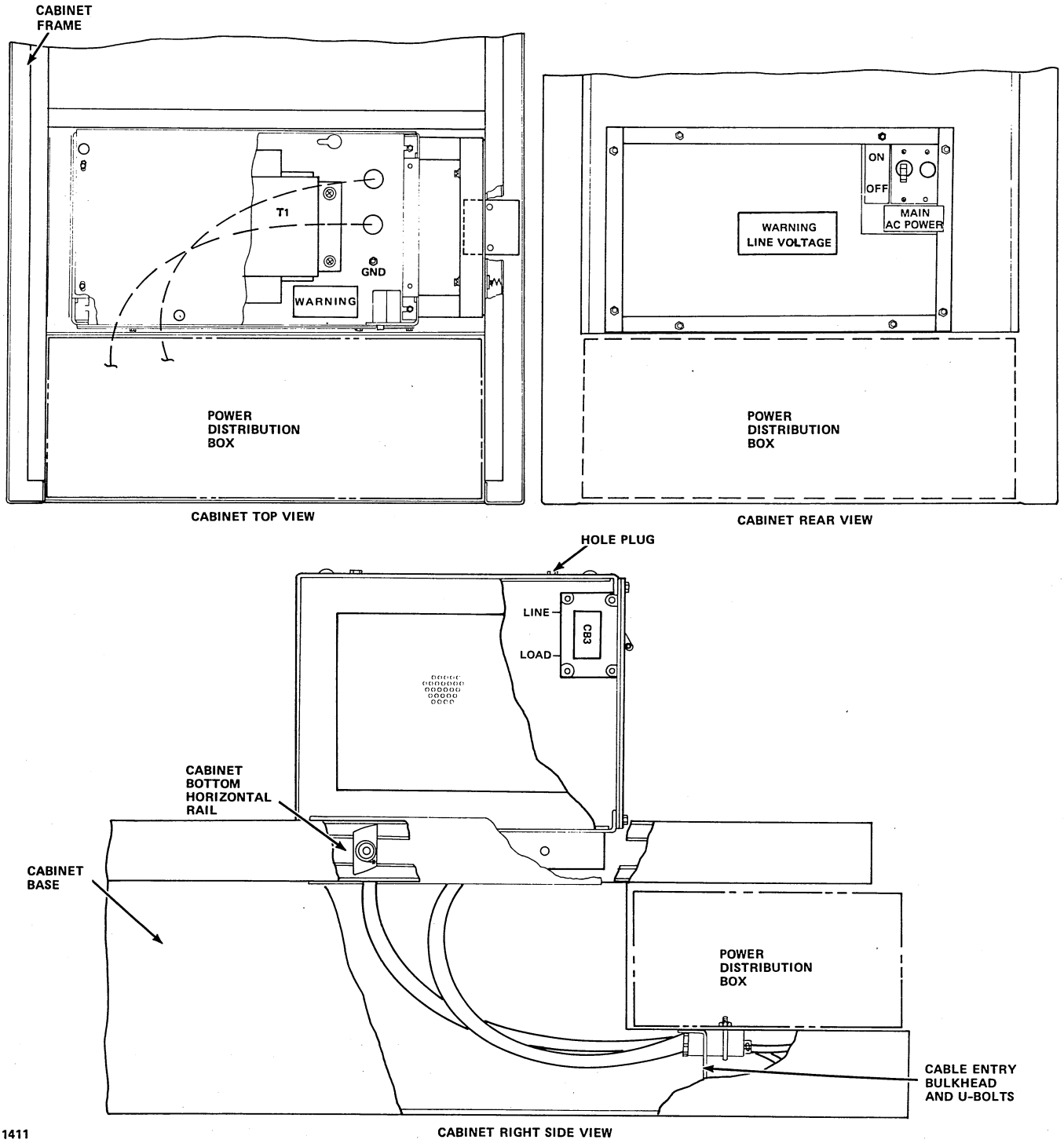

Figure 28-2. Power Conversion Unit Installation

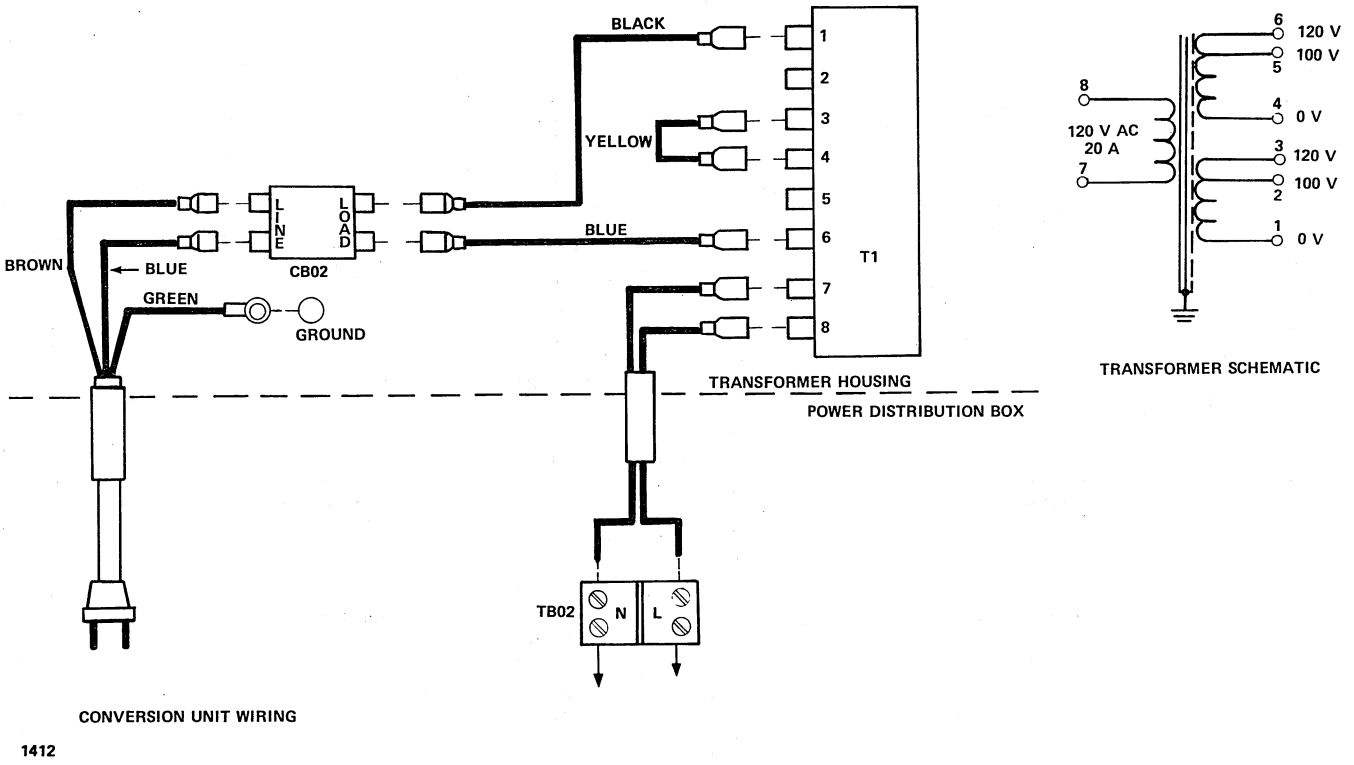

Figure 28-3. Magnetic Tape Transport Power Conversion Unit Wiring Diagram

housing. Connect the loose ends of the power cord to the top (LINE) terminals of the circuit breaker. Connect the loose ends of the transformer input cable to the bottom (LOAD) terminals of the circuit breaker. Refer to the wiring diagram in figure 28-3 for proper connection. Position the end cap into the transformer housing, engaging the screws installed in step 11. Tighten the lower screws via the access holes in the top of the housing. Secure the top of the end cap to the top of the housing. Secure the top of the end cap to the top of the housing using two 6/32 thread-roll screws (part number 96744965).

18. Secure the transformer output cable assembly and the power cord flexible conduit cable to the cabinet cable entry bulkhead using two U-bolts (part number 96785703).

19. Route the tinned ends of the transformer output cable through the original input power cord clamp of the power distribution box, and connect the ends to TB01. Refer to figure 28-2.

20. Verify that the electrical connections of the transformer agree with those shown in figure 28-3 and table 28-1.

    Install the locally obtained power plug on the remaining end of the power cord. The shield drain wire and the green/yellow wire should both be connected to the power plug ground connection. The brown wire should be connected to the line terminal and the blue wire to the neutral terminal of the power plug.

21. Connect the power cord to the site power receptacle. Turn on transformer circuit breaker CB03. Measure the voltage at the power distribution box TB02 terminals. If the voltages are not specified, power down, change the transformer connections accordingly, and/or correct the problem.

22. Power down the unit by turning off CB03 on the transformer housing.

23. As shown in figure 28-2, attach the warning plate (part number 24547539) to the bottom of the channel cover in front of the transformer.

24. Install the power distribution box cover with the hardware retained in step 4.

25. Position the transformer cover (part number 96752916) on the channel cover, and secure it with eight 6/32 thread-roll screws (part number 96744965).

26. Attach the outer warning plate (part number 24547502), main ac power lable (part number 39472205), and on/off label (part number 39472206) to

the transformer cover as shown in figure 28-2. Remove the MAIN POWER label from the power distribution box at CB02.

27. Install the six hole plugs (part number 94305542) in the screwdriver access holes in the top of the channel cover.

28. Turn on circuit breakers CB03 on the transformer housing and CB01 and CB02 on the power distribution box.

29. Reinstall all covers and panels removed to accomplish the transformer installation.

DIAGNOSTIC TESTING

After installing the power conversion unit, proceed with the system installation and checkout. Run system diagnostic tests as required to verify satisfactory operation.

NOTE

The diagnostic test and routines described in the system hardware maintenance manual can be performed only after the console display, the processor, and the flexible disk drive or tape cassette (diagnostic load device) installations are complete.

The basic operators panel (BOP) is supplied only with the CYBER 18-5M Batch Terminal Computer System. The BOP provides switches and indicators that enable the operator to autoload, run, stop, and master clear the processor; to select the communication line adapter channel and to visually monitor certain system status conditions. The basic operators panel connects directly to the backplane wire-wrap pins of the card reader/line printer/communication line adapter board at location slot J in the processor with a signal cable.

PARTS AND EQUIPMENT

Parts and Equipment	Part Number
Basic operators panel and cable assembly	15611900 or 96721364

TEST EQUIPMENT AND TOOLS

No special test equipment is required to install the basic operators panel or its associated equipment. The wires listed in table 29-1 are normally factory installed. If these wires have not previously been added to the backplane, the following special tools are required:

Tool	Part Number
Wire-unwrap tool	12259138
Wire-wrap tool	12263210

UNCRATING

The basic operators panel is shipped in a heavy-duty cardboard carton and is buffered from shock and impact damage by an industrial filler. The signal cable for the BOP is connected at one end of the BOP, and the remainder is coiled and secured within the shipping container. No special uncrating instructions are required for the basic operators panel.

CRATING

Refer to the above uncrating instructions for crating the unit.

INSPECTION

Inspect the BOP as follows:

1. Remove the BOP and signal cable from the container.

TABLE 29-1. BACKPLANE WIRE ADDITIONS

Orgin		Destination		Remarks
Slot	Pin	Slot	Pin	
L	288	J	84	RDINT15/
L	95	J	98	SETSM204/
K	73	J	99	MICRSTRT/
K	72	J	293	EXSTOP/
K	74	J	294	MC-S/
L	97	J	295	SETSM215/
K	82	K	102	DS-SWNC TO GND†
K	231	K	226	MI-SWNC TO GND
K	83	K	236	MC-SWNC TO GND
J	1	J	95	+5 V
J	2	J	96	+5 V
J	93	J	97	GND
J	97	J	102	GND

† This wire must be installed because the BOP does not use the I/O-TTY controller debounce circuitry and must be prevented from force-setting the processor into the deadstart mode.

2. Inspect the unit for physical damage, such as broken connectors, loose parts, bent pins, or surface damage to the BOP or cable skin.

POWER REQUIREMENTS

The basic operators panel required dc power only. This power is obtained from the processor.

POWER CABLING

The basic operators panel receives dc power from the processor through the signal interface cable. Figure 29-1 illustrates the connection of this cable to the backplane.

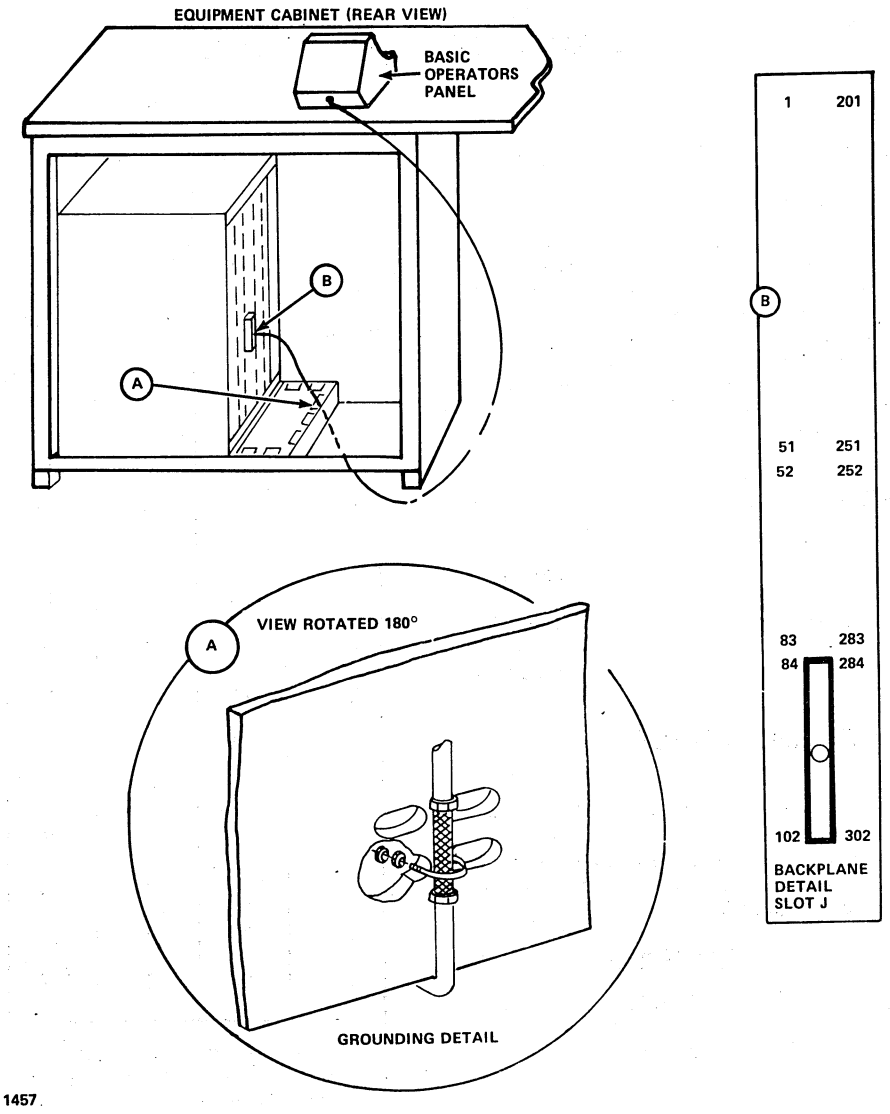

Figure 29-1. BOP Signal Cable Connection

SIGNAL CABLING

Install the signal cable as follows:

1. Before connecting the BOP cable connector to the backplane, verify that the wires listed in table 29-1 have been incorporated. If they have not already been incorporated, install them.

2. Connect the signal cable to the backplane card reader/line printer/communication line adapter board location slot J (figure 29-1).

3. Attach the cable shield to the cabinet (figure 29-1). More than one signal cable may be grounded by a single U-bolt.

SWITCH/JUMPER VERIFICATION

No switch or jumper verification of the BOP unit is required.

DIAGNOSTIC TESTING

Perform the manual operating and diagnostic checks according to the diagnostic decision logic tables of the CYBER 18-5M Batch Terminal Computer System Hardware Maintenance Manual, Volume 2.

NOTE

Diagnostic testing of the basic operators panel can only be performed after the card reader, console display, and processor have been installed.

The auto restart loader (ARL) consists of one printed wiring assembly that may occupy any available A/Q slot of the processor and one backplane adapter paddle board that is installed over the processor backplane pins of the same A/Q slot. The auto restart loader provides restart bootstrap program loading, two channels of digital input/output interface to external devices, and stall alarm control. The equipment and cabling required to interface the auto restart loader to the external devices are not supplied with the auto restart loader. However, to maintain system continuity, the installation procedures of the optional equipment as they relate to the auto restart loader are included in this section. Figure 30-1 is a block diagram of the auto restart loader and the devices that interface to it.

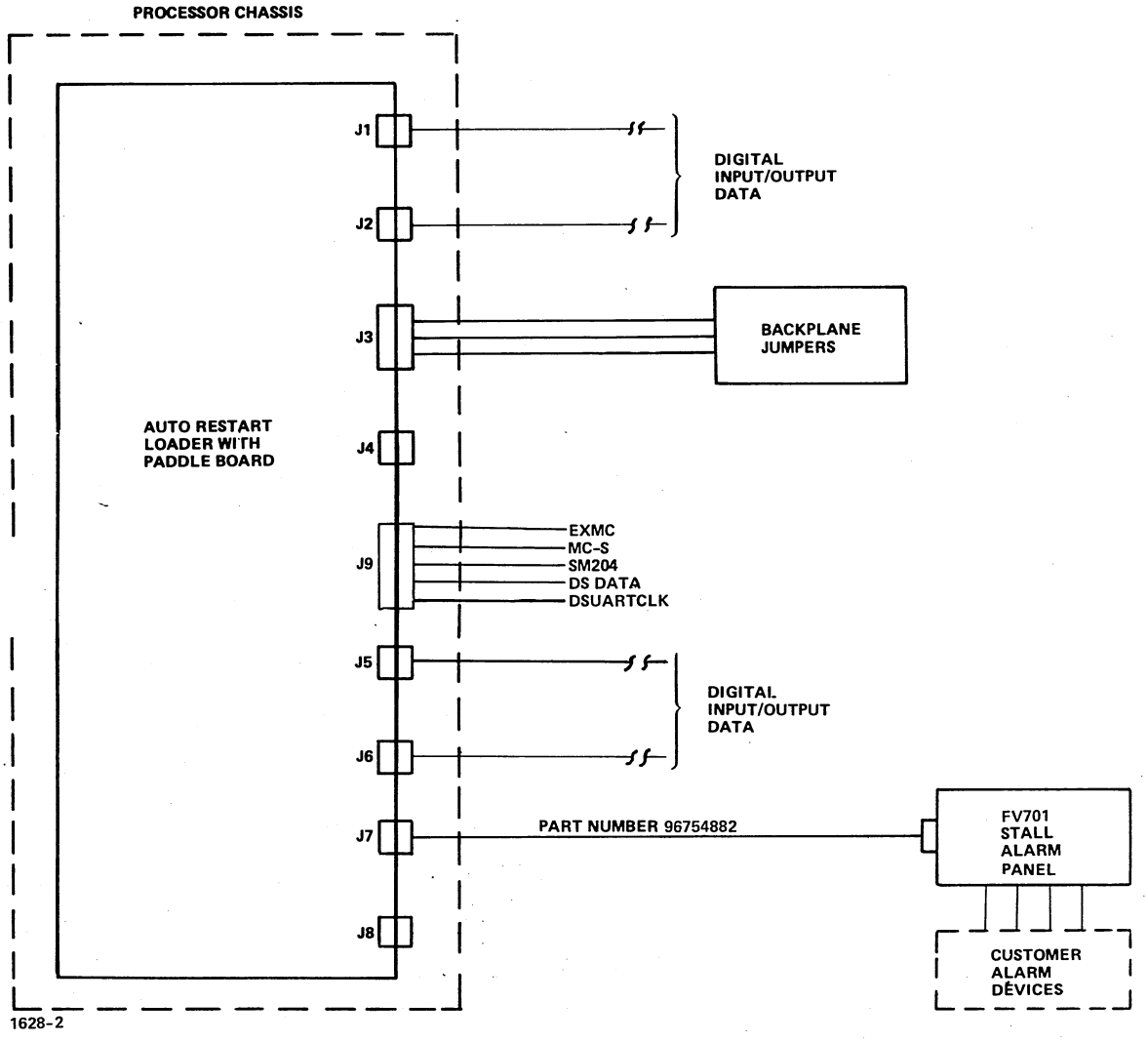

Figure 30-1. Auto Restart Loader System Block Diagram

PARTS AND EQUIPMENT

Parts and Equipment	Equipment Number	Part Number
Auto restart loader	FV679-C or FV679-D	96890081 96890086
Stall alarm panel	FV701-A	96721528
Cable assembly, stall alarm panel, 5 feet (1.5 meters)	--	96754882
Cable assembly, 14-pin connector to 14-pin connector, 10 inches (254 millimeters)	--	88951950
Cable assembly, 14-pin connector to 14-pin connector, 10 inches (254 millimeters)	--	96820312
Wire, white, AWG-30, 5 feet (1.5 meters) (for backplane wiring additions)	--	15006509

TOOLS AND TEST EQUIPMENT

No special test equipment is required to install the auto restart loader and its associated equipment. If backplane wires (described later in this section) must be added or modified, the following special tools are required:

Tool	Part Number
Wire-unwrap tool	12259138
Wire-wrap tool	12263210

UNCRATING

The auto restart loader printed wiring assembly paddle board, and stall alarm panel are shipped either installed in the applicable cabinet or packed into a heavy-duty cardboard carton. If the equipment is received installed in the cabinets, refer to section 2 for uncrating procedures. All cables are shipped packed into heavy-duty cardboard cartons. If shipped in heavy-duty cartons, the equipment is buffered from shock and impact damage by industrial filler. No special instructions are required to remove the equipment from the cartons.

CRATING

Refer to the above uncrating instructions for crating the equipment.

INSPECTION

Inspect the auto restart loader, paddle board, stall alarm panel, and cables as follows:

1. Remove the items from the shipping carton or cabinet, and check for obvious damage.
2. Check the contents of each carton against the packing list.
3. Examine all connector plugs for possible bent, missing, or broken pieces.
4. Inspect all cables for damage to the insulation and shield braid and for security of connectors.
5. Inspect for physical damage to the printed wiring assemblies.

POWER REQUIREMENTS

The auto restart loader receives +5 V dc and ±12 V dc from the processor dc power supply by connection to the assigned backplane board slot position. The stall alarm panel receives +5 V dc from the auto restart loader via the auto restart loader paddle board through connection of the stall alarm panel signal cable.

CPU BACKPLANE WIRING

The auto restart loader requires connection of some processor backplane signal lines that may not be installed prior to shipping. Inspect the backplane for wiring of the signal lines listed in table 30-1. If they are not already installed, check all backplane slots for the availability of prewired pins 41, 42, and 44. If these prewired pins are available, connect the special paddle board signal jumper listed in table 30-2 to the appropriate pins.

NOTES

1. Turn AC power switch to the OFF position before connecting any jumpers or wires to the backplane.
2. On the MP systems, SM204, DSDATA, and DSUARTCLK can be jumper connected from K-88, K-248, and K-206 respectively.

If there are no available prewired pins, 41, 42, and 44, use the wire wrap tool to install the wiring between the origin backplane slots and the auto restart loader board slot (A/Q only). Wire used on the backplane should be white AWG-30 (part number 15006509) or the equivalent.

TABLE 30-1. CPU BACKPLANE WIRE CHANGES

Signal Name	Restart Loader (A/Q) Slot/Pin	To SMI Slot/Pin	Function
SM204/	44	K/88	Deadstart signal
DSDATA/	41	K/248	Deadstart data
DSUARTCLK/	42	K/206	Deadstart clock
POWFAIL/†	242	P/296	Power failure

†Not required if processor contains battery backup.

TABLE 30-2. SPECIAL PADDLE BOARD SIGNAL JUMPERS

Signal Name	Source	Destination
SM204/	J9-12	A prewired pin 44 in any available backplane slot
DSDATA/	J9-13	A prewired pin 41 in any available backplane slot
DSUARTCLK	J9-14	A prewired pin 42 in any available backplane slot

CAUTION

Printed wiring assemblies with red solder masks, such as the auto restart loader, contain MOS or electrostatic-sensitive devices. Exercise extreme care in handling to avoid damage. Common practices, such as touching a grounded surface before handling, inserting in antistatic or conductive bags for storage or transfer, and repairing only at properly equipped and grounded work stations, must be strictly followed.

SWITCH/JUMPER VERIFICATION

Prior to installation of the auto restart loader printed wiring assembly into the processor chassis, certain switch, jumper, and programmable read-only memory (PROM) configurations must be established or verified.

EQUIPMENT CODE SELECTION

An equipment code is established by the 4-segment, dual in-line package (DIP) switch (SW2) at PWA location M11, figure 30-2. Refer to table 30-3, and configure the switch segments to establish the required equipment code.

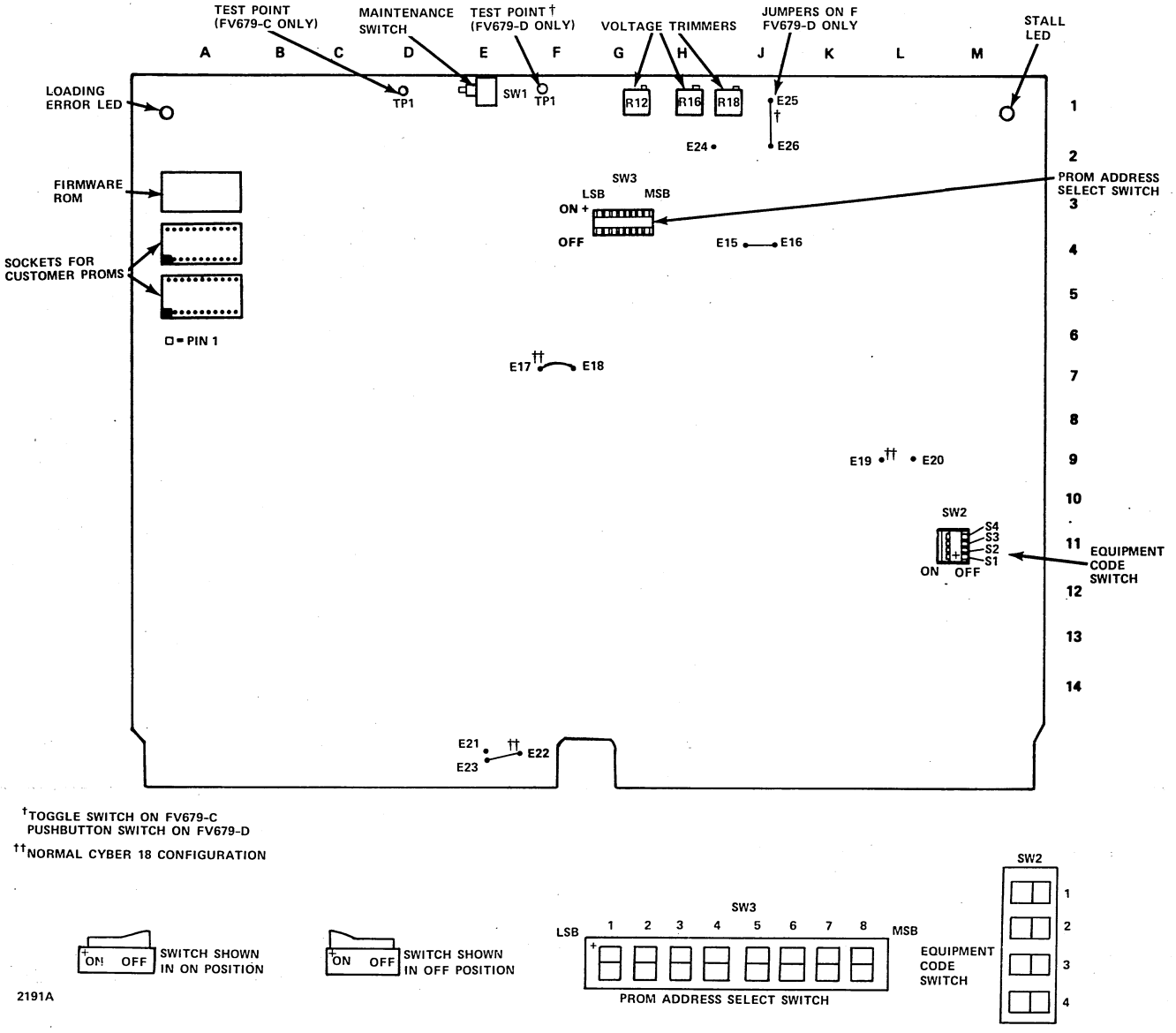

Figure 30-2. Auto Restart Loader Component Locations

TABLE 30-3. EQUIPMENT CODE SELECT SWITCH (SW2) SETTINGS

Equipment Code	Switch Position (Location M11)			
	S1	S2	S3	S4
0	Off	Off	Off	Off
1	On	Off	Off	Off
2	Off	On	Off	Off
3	On	On	Off	Off
4	Off	Off	On	Off
5	On	Off	On	Off
6†	Off	On	On	Off
7	On	On	On	Off
8	Off	Off	Off	On
9	On	Off	Off	On
10 (A)	Off	On	Off	On
11 (B)	On	On	Off	On
12 (C)	Off	Off	On	On
13 (D)	On	Off	On	On
14 (E)	Off	On	On	On
15 (F)	On	On	On	On

†Normal CYBER 18 configuration

LOAD STARTING ADDRESS

The deadstart loading operation can be initiated by an A/Q command or a manual switch. The A/Q restart loading operation starts from a PROM location specified either by the contents of the A register or by the PROM address select switch (SW3) at PWA location G3 (figure 30-2). The eight PROM address select switch segments must be set to establish this optional starting address. Refer to figures 30-2 and 30-3 to determine the required configuration of the switch segments. The user PROM addresses start at 8000 (hexadecimal) and continue to 8FFF maximum. The 8-segment PROM address select switch can derive 256 (decimal) different module 16 PROM addresses from which user programs can be loaded. A switch segment is considered on (closed) when the rocker adjacent to the + (plus) mark on the switch body is depressed (figure 30-2).

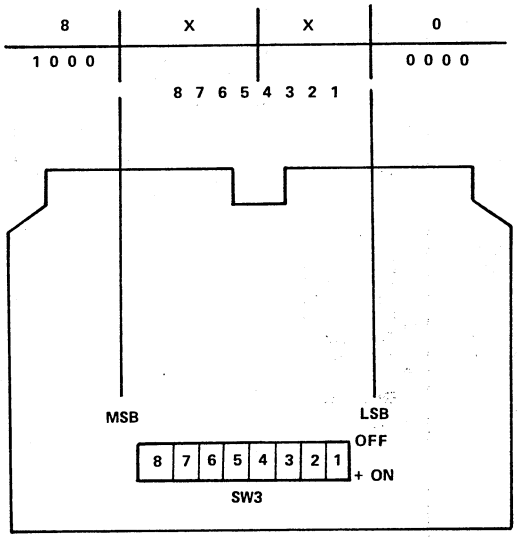

USER PROM START ADDRESS	SW3 SEGMENT SETTINGS							
	8	7	6	5	4	3	2	1
0A	OFF	OFF	OFF	OFF	ON	OFF	ON	OFF
22	OFF	OFF	ON	OFF	OFF	OFF	ON	OFF
27	OFF	OFF	ON	OFF	OFF	ON	ON	ON

1630

Figure 30-3. PROM Address Select Switch (SW3)

WA JUMPERS

The signal jumper configuration listed in table 30-4 must be established on the PWA for operation of the auto restart loader in a CYBER 18 system. The jumper terminal locations are shown in figure 30-2.

TABLE 30-4. AUTO RESTART LOADER PWA JUMPERS

Signal Name	Terminals	Jumper Location	Configuration (Standard)
PUP RESTART ENABLE	E15 - E16	J3	Installed
DG CLR ON MR	E17 - E18	F6	Installed
PROG-PROT/	E19 - E20	L8	Out
SM204/	E21 - E22	E14	Out
DSTTL/	E23 - E22	E14	Installed
EXTERNAL CLOCK†	E24 - E26	HJ1	Out
INTERNAL CLOCK†	E25 - E26	J1	Installed

†Not applicable to FV679-C

DEADSTART DATA PROMS

The auto restart loader contains one PROM chip at board location A3, which contains the controlware. Two IC sockets at board locations A4 and A5 are provided to mount preprogrammed PROM chips, furnished by the customer, which contain the deadstart data. If these PROMs are provided by the customer, install the chip(s) at board location(s) A4 (and A5) (figure 30-2) according to the word size defined in table 30-5.

TABLE 30-5. INCREASED DATA PROM LOCATIONS

Word Size	Socket A4	Socket A5
512 by 8	82S141	Not used
1024 by 8	82S181	Not used
2048 by 8	82S191	Not used
4096 by 8	82S191	82S191

PWA INSERTION

After all switch, jumper, and PROM selections have been determined and properly set, the auto restart loader PWA is ready for insertion into the assigned processor A/Q slot. Proceed as follows:

1. Turn the ac power switch to OFF.
2. Remove the right side panel of the processor cabinet.
3. Release the two captive latches on the processor chassis cover, and remove the cover.

CAUTION

The auto restart loader PWA must be installed into an A/Q slot only. It also must be installed with its components facing left.

4. Carefully insert the board into the selected A/Q slot. Make sure that the board is properly aligned in the upper and lower chassis guide rails.
5. Ensure that the board is fully seated within the chassis backplane connector by applying firm thumb pressure at the upper and lower corners of the front of the board.
6. Replace the chassis cover plate.
7. Replace the cabinet right side panel.
8. Turn the ac power switch to ON.

PADDLE BOARD INSTALLATION

The auto restart loader paddle board, figure 30-4, is installed on the processor backplane over the selected A/Q slot backplane pins. The paddle board provides the connection interface between the auto restart loader and the devices external to the processor. Proceed as follows to install the paddle board:

1. Turn the ac power switch to OFF.
2. Remove the processor side and rear panels.
3. Attach the paddle board to the selected A/Q slot backplane pins. Verify as labeled on the paddle board connectors the starting and ending backplane pin numbers (1/201 through 102/302) to which the paddle board should be securely mated. (Ensure that the paddle board is pushed onto the backplane pins as far as possible.)
4. Attach the paddle board J9 connector cable assembly by pressing the cable plug labeled MISC into the J9 connector. Make sure that the short wires are mated with J9-1 and J9-2.
5. Install the MC-S/signal jumper wire from the ARL paddle board J9, pin 6 to the central processing unit (CPU) backplane slot K, pin 74.

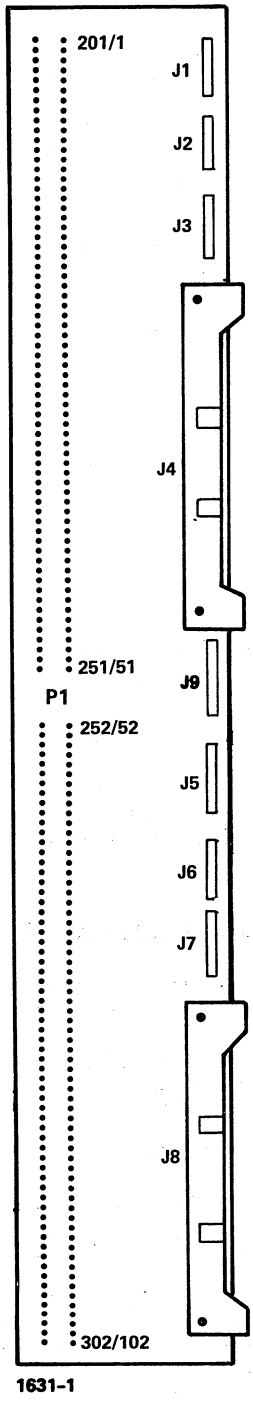

Figure 30-4. Auto Restart Loader Paddle Board

6. Replace the processor side and rear panels.

7. Turn the ac power switch to ON.

PADDLE BOARD JUMPERS

Additional jumpers must be installed between the auto restart loader paddle board, the processor backplane, and the processor dc power supply.

The auto restart loader macro-interrupt line and other signals (as required) must also be connected to the auto restart loader at connector J3 of the paddle board. Refer to table 30-6, and install the jumpers and wiring between their origins and connector J3 of the paddle board.

If there are no digital I/O devices connected to the auto restart loader, the DI/O loopback cables should be installed to avoid unwanted ghost interrupts. Install cable assembly, part number 88951950, between J1 and J5 and cable assembly, part number 96820312, between J2 and J6.

TABLE 30-6. PADDLE BOARD SIGNAL JUMPERS

Signal Name	Source	Destination
INTERRUPT/	J3-9	CPU backplane slot L via the assigned macro-interrupt jumper
DSTTL/	J3-10	Customer equipment†
DSCC/	J3-11	Customer equipment†
ACFAIL/	J3-13	Processor power supply TB1-4
MC-S/(EXMC/)	J9-6	CPU backplane slot K pin 74

†These inputs are provided so nonstandard customer equipment can use the auto restart loader deadstart capability.

STALL ALARM PANEL

The stall alarm panel is bracket-mounted in the cassette drive cavity position of the processor cabinet. Connection of the stall alarm panel (figure 30-5) to the auto restart loader paddle board is via one signal cable (figure 30-6) supplied with the panel. Connection between the stall alarm panel and external devices is via a terminal block on the rear of the stall alarm panel. Table 30-7 lists the connection available for external equipment to interface with the stall alarm panel.

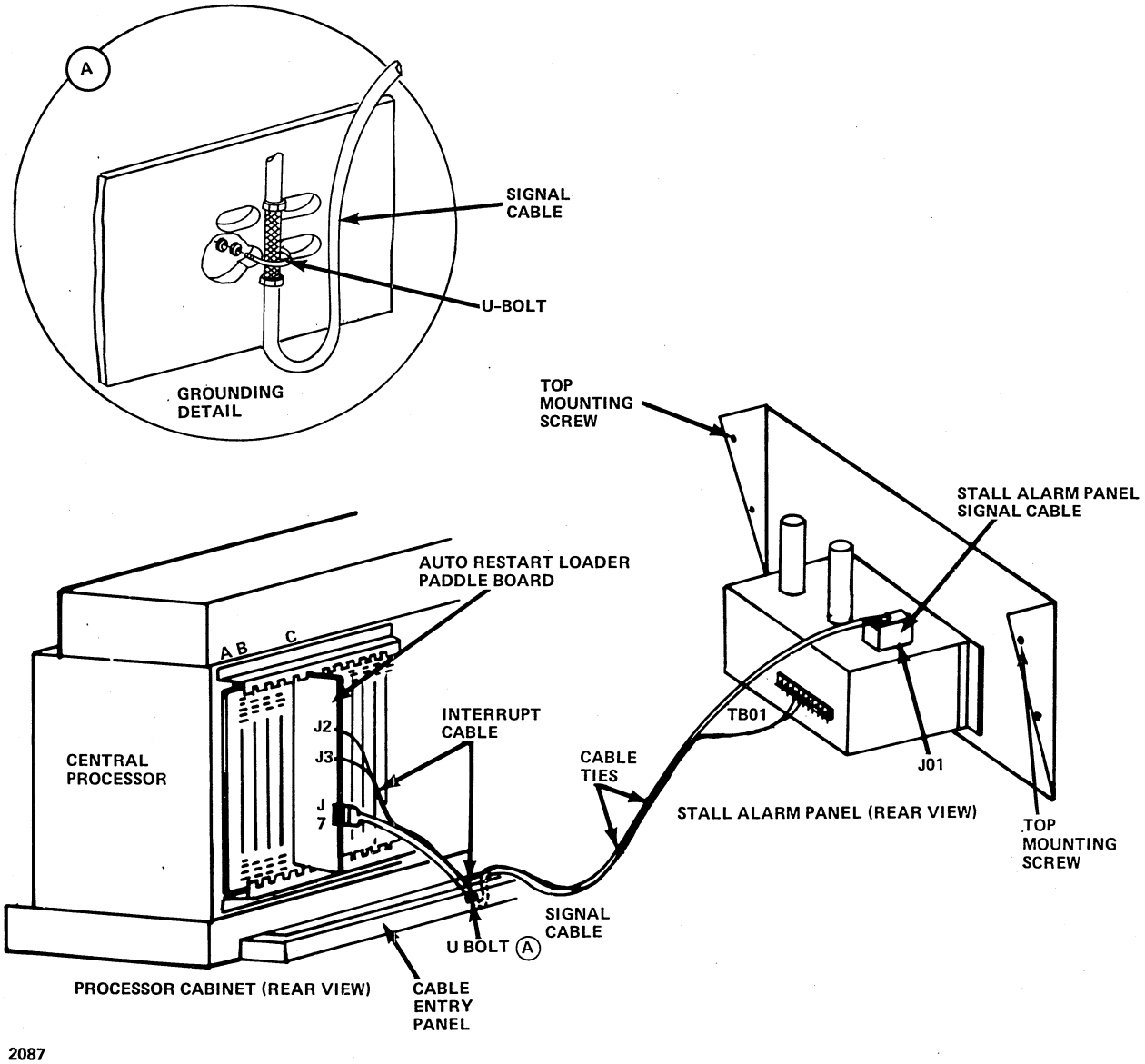

Figure 30-5. Auto Restart Loader and Stall Alarm Panel Signal Cabling

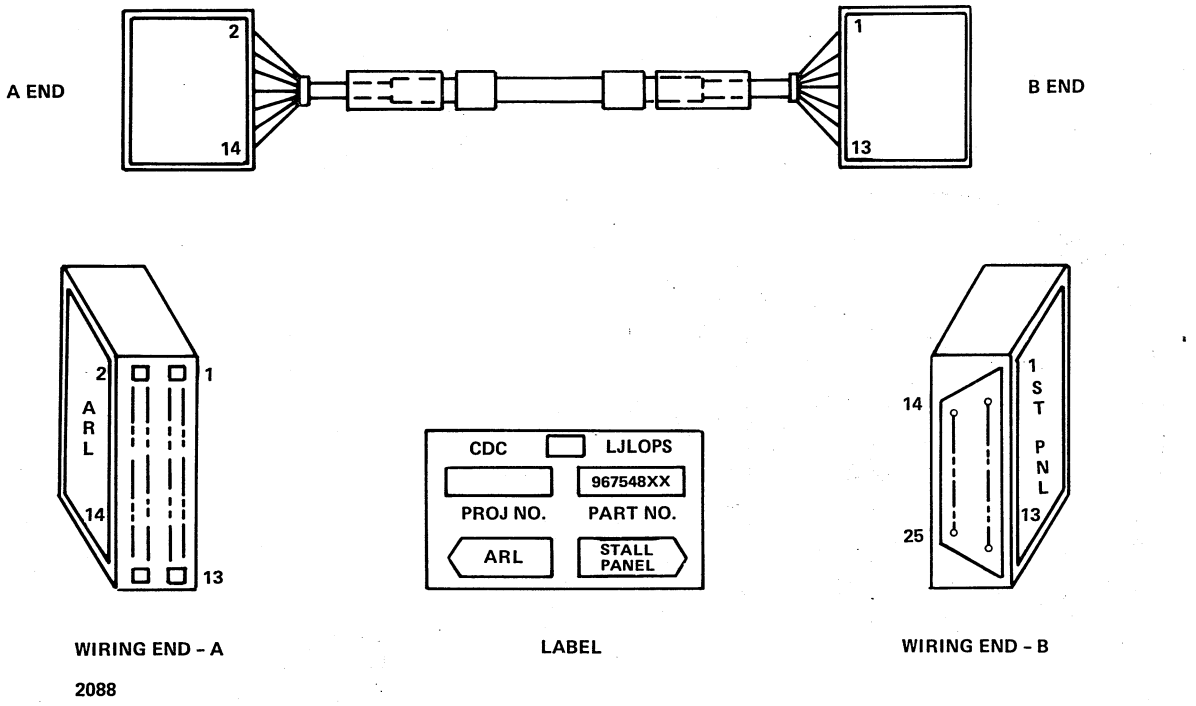

Figure 30-6. Stall Alarm Panel Signal Cable

TABLE 30-7. STALL ALARM PANEL TB01 CONNECTIONS

Terminal Number	Signal	Description
1	Relay 1 NO	Relay 1 normally open contact
2	Relay 1 C	Relay 1 common contact
3	Relay 1 NC	Relay 1 normally closed contact
4	Relay 2 NO	Relay 2 normally open contact
5	Relay 2 C	Relay 2 common contact
6	Relay 2 NC	Relay 2 normally closed contact
7†	+FLDS	Field stall positive input
8†	+FLDS	Field stall positive input
9††	-FLDS	Field stall ground input
10††	-FLDS	Field stall ground input

†Pins 7 and 8 are jumpered together internally.

††Pins 9 and 10 are jumpered together internally.

To install the stall alarm panel, proceed as follows:

1. Remove the front and left side panels from the CPU cabinet.
2. Open the front panel of the CPU panel.
3. Remove the blank panel from the cassette drive cavity (two screws and nuts on each side). (See figure 30-7.)
4. Install the stall alarm panel from the front and secure each side with the screws and nuts removed in step 3.
5. Connect the stall alarm panel signal cable assembly (figure 30-6) A end to J7 of the auto restart loader paddle board, as shown in figure 30-5.
6. Route the signal cable into, and back out of, the cable entry panel (figure 30-5), forming a loop with the box. Using one of the cable entry panel U-bolts, ground the cable. More than one cable may be grounded by a single U-bolt. Continue to route the cable through the cabinet interior up the right side (as viewed from the front) of the front panel to the stall alarm.
7. Connect the B end of the cable assembly to J01 of the stall alarm panel.

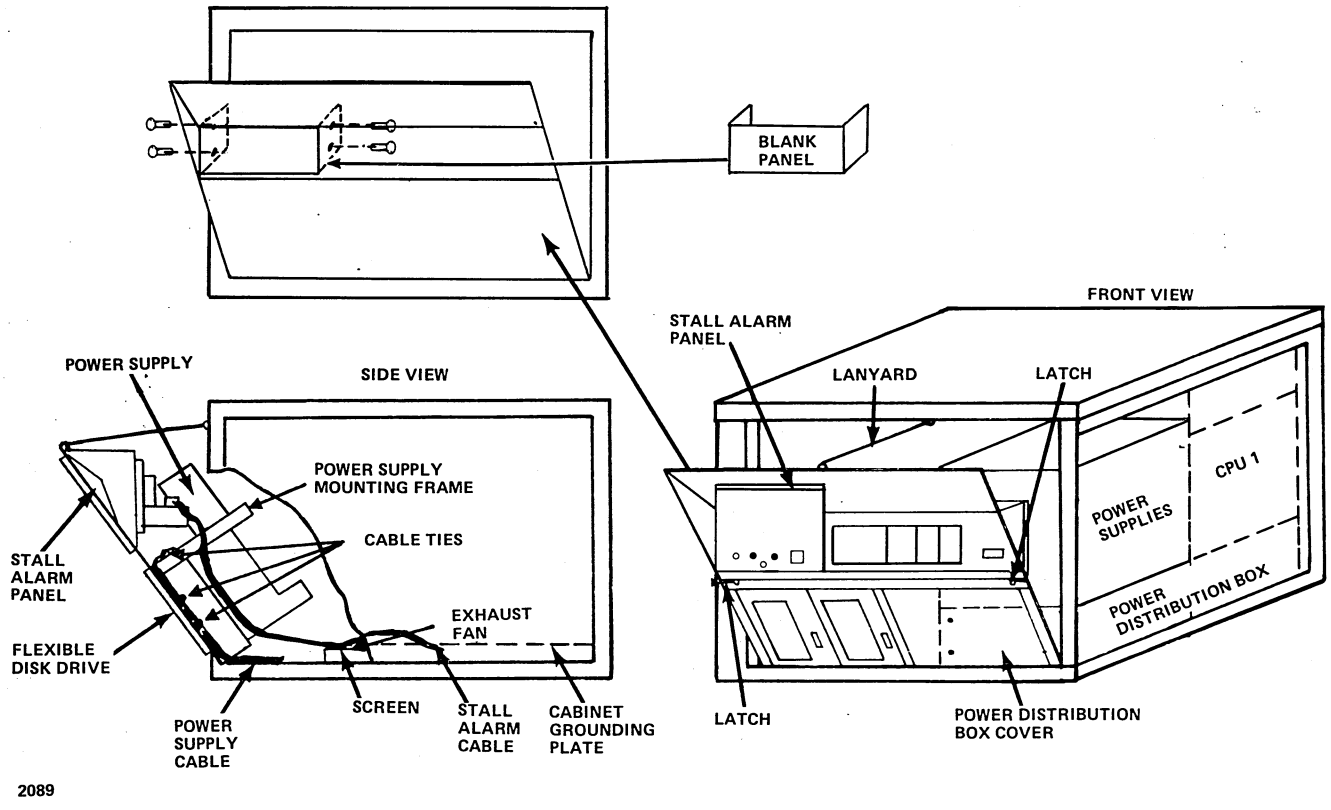

Figure 30-7. Stall Alarm Panel Signal Cabling

4. Install the interrupt cable as follows:

NOTE

Route the interrupt cable the same as the stall alarm panel cable. Access to TB01 (figure 30-5) is obtained by removing the two top-mounting screws of the stall alarm panel, and tilting the panel forward.

a. Paddle board:

- White to J3 pin 11
- Drain/Black to J2 pin 14

b. Stall Alarm panel:

- White to stall relay input normally open (TB01 pin 4)
- Drain/Black to stall relay input common (TB01 pin 5)

9. As shown in figure 30-5 and 30-6, secure the stall alarm signal and interrupt cables to the cabinet with two cable ties.

10. The user may connect any user-supplied external alarm devices to the stall alarm panel terminal block according to table 30-8.

TABLE 30-8. DIGITAL I/O DEVICE CONNECTIONS

Connector	Byte Mode	Word Mode	Control Signals
J1	Byte 0	Word 0 LSB†	Not used in word mode
J2	Byte 1	Word 0 MSB††	
J5	Byte 2	Word 1 LSB	Not used in word mode
J6	Byte 3	Word 1 MSB	

†LSB = least significant byte

††MSB = most significant byte

11. Replace the front and left side panels on the CPU cabinet.

12. Close the front panel

CAUTION

Ensure the stall alarm cable and interrupt cable are free of snag, curl, or mesh when closing the front panel.

DIGITAL I/O DEVICES

If digital I/O devices are to be controlled by the auto restart loader, the device signal cables are connected to paddle board connectors J1, J2, J5, and J6 (figure 30-4). The signal cables to the digital I/O devices are not supplied with the auto restart loader. Refer to tables 30-8 and 30-9 for specific connector information as required.

To connect the digital I/O device signal cable(s), proceed as follows:

1. Attach the signal cable to the appropriate connector of the auto restart loader paddle board. Refer to figures 30-1 and 30-5, and to tables 30-8 and 30-9.

2. Route the cable(s) through the processor cable entry panel and out the rear of the processor cabinet to the appropriate connector for the I/O device. (Refer to the applicable hardware maintenance manual for installing the I/O device.)

3. All signal cable shield braids must be grounded at the processor cable entry panel using U-bolts or as shown in the grounding detail of figure 30-5.

4. Accomplish suitable signal cable shield braid grounding at the I/O device.

5. Replace all panels removed to accomplish installation of the auto restart loader and associated equipment.

TABLE 30-9. PIN LIST OF DIGITAL I/O CONNECTORS J1, J2, J5, AND J6

Pin Numbers	Signal Name†	Data Bit
1	DBn0	LSB
2	DBn1	LSB
3	DBn2	LSB
4	DBn3	LSB
5	DBn4	LSB
6	DBn5	LSB
7	DBn6	LSB
8	DBn7	MSB
9	REQn/	Request
10	RSTn/	Reset
11	RESPn/	Response
12,13,14	GND	Ground

†n = byte number 0-3

DIAGNOSTIC TESTING

Perform the manual operating and diagnostic checks according to the diagnostic decision logic tables (DDLTs) described in the applicable subsystem hardware maintenance manual.

NOTE

The diagnostic tests and routines described in the subsystem hardware maintenance manual can be performed only after the processor, console display, and flexible disk drive or tape cassette (diagnostic load device) installations have been completed.

DISPLAY TERMINAL (CC628) 31

For information on parts and equipment, crating, uncrating, inspection, and power requirements of the CC628 display terminal, refer to the 722-10 (CC628) Display Terminal Operators Guide/Installation Instructions Manual and the 722-10 (CC628) Display Terminal Hardware Maintenance Manual (Site Information).

POWER CABLING

Refer to section 6 for location and manner of connecting the input power cord of the CC628 display terminal.

SIGNAL CABLING

Refer to section 6 for installation of the signal cable.

SWITCH/JUMPER VERIFICATION

INTERNAL CONTROLS

Refer to the 722-10 (CC628) Display Terminal Reference Manual and the 722-10 (CC628) Display Terminal Hardware Maintenance Manual for normal operating conditions of the internal controls of the CC628 display terminal.

EXTERNAL CONTROLS

The CC628 display terminal has external controls located behind the operator access door (to the right of the display screen), on and below the keyboard, and on the base of the terminal.

Figure 31-1 shows the controls located behind the operator access door. Verify that the data rate select and mode select switches comply with the normal operating settings illustrated. (After changing any of the mode select switches, MANUAL RELEASE must be pressed.) Refer to the 722-10 (CC628) Display Terminal Reference Manual for instructions on setting these switches.

Figure 31-2 shows the controls located on and below the keyboard. Refer to the 722-10 (CC628) Display Terminal Reference Manual for information on these controls.

Figure 31-3 shows the controls on the base of the terminal. Refer to the 722-10 (CC628) Display Terminal Reference Manual for information on these controls.

I/O-TTY CONTROLLER BAUD RATE SELECT SWITCHES

Refer to section 6 for the normal operating settings of the switches on the I/O-TTY controller.

DIAGNOSTIC TESTING

Refer to the 722-10 (CC628) Display Terminal Reference Manual and the 722-10 (CC628) Display Terminal Hardware Maintenance Manual for diagnostic self-test routines of the CC628 display terminal.

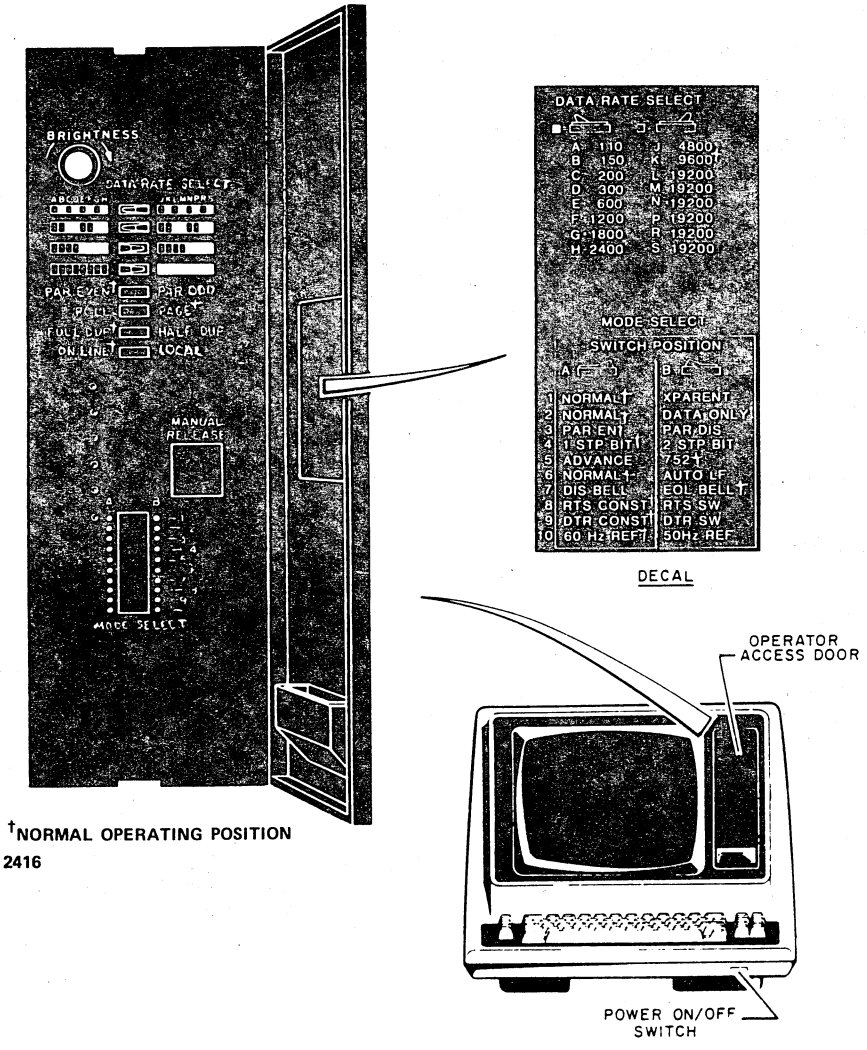

†NORMAL OPERATING POSITION

2416

Figure 31-1. CC628 Display Terminal External Controls, Operator Access Door

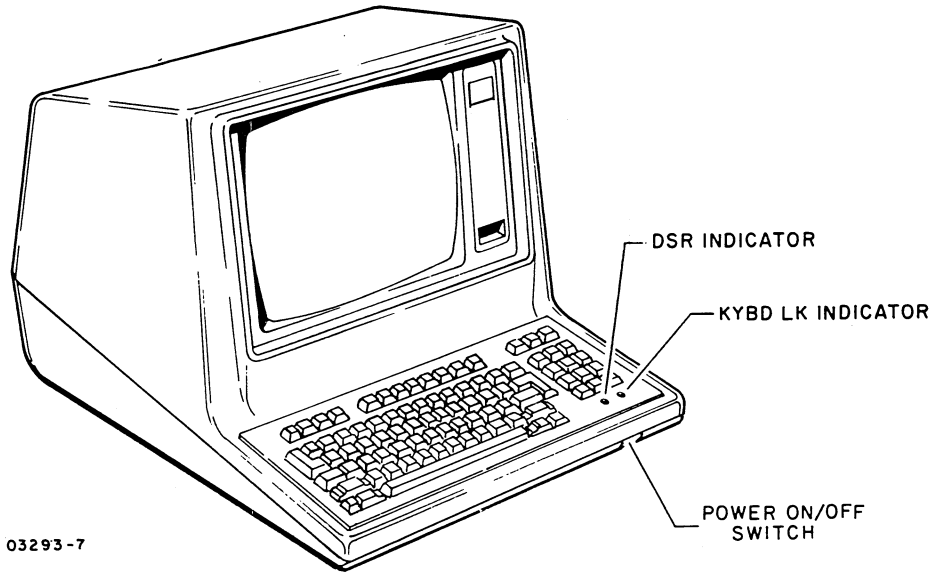

Figure 31-2. CC628 Display Terminal Power On/Off Switch and Keyboard Indicators

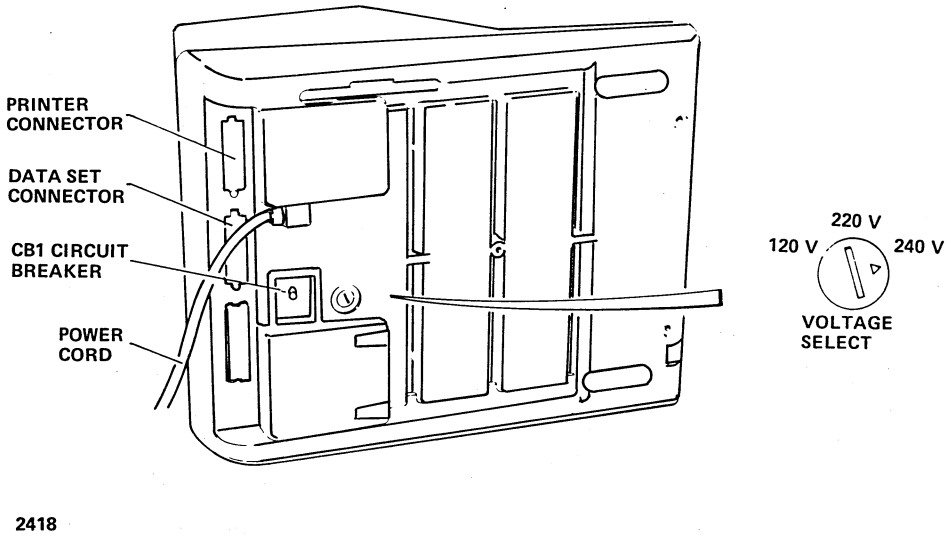

Figure 31-3. CC628 Display Terminal (Bottom View)

I/O EXPANSION SUBSYSTEM 32

GENERAL

The I/O expansion subsystem consists of the following major assemblies:

Item	Qty	Name
1	1	I/O Expansion Unit (CW218)
2	1	A/Q Extender (AT314)
3	1	DMA Extender (BU272)
4	1	Dual Mode Access (AU115)

These assemblies may be arranged in a variety of configurations, including A/Q line expansion for a single processor system and A/Q line expansion for a dual processor system. A/Q and DMA expansion for a single or dual processor system is accomplished by addition of the DMA extender to the A/Q expansion configuration. In all configurations, the equipment includes interface cables to facilitate system integration.

When dual processor system capability is required, the dual mode access and duplicate quantities of the A/Q and DMA extenders are required.

Refer to the I/O Expansion Subsystem Hardware Reference/Maintenance Manual for installation and checkout procedures.

The CK130 (725-10) matrix printer is a 150-character-per-second, table-top, dot-matrix printer. The printer produces up to four copies plus an original with up to 132 columns of normal sized characters at a maximum bidirectional print speed of 150 characters per second. Printer capabilities include a 1280-character interface buffer and bidirectional printing. Other features include electronic vertical forms control unit (EVFU) that can store and execute vertical format instructions issued by the CYBER 18 computer, elongated characters, variable character pitch/density, superscript/subscript printing, optional character sets, built-in self tests, and switch-selectable configuration and protocol options.

The printer can be driven by a CYBER 18 eight-channel communication line adapter (CLA) or can operate as a peripheral of a CC628 keyboard display terminal. An interface/signal cable connects the printer to either the CLA (via the back panel pins of the processor) or to the printer connector of the CC628 display terminal.

PARTS AND EQUIPMENT

Parts and Equipment	Equipment Number	Part Number
Matrix Printer	CK130-A/B	15046904
Printer ribbon cassette		Refer to printer manual
Interface cable:		
CLA to printer:		
via printer cable		96752351
- or -		
via CRT cable (both are 50 foot or 15.2 meters long)		96750282
Terminal to printer (20.5 feet or 7.6 meters long)		61406101

TOOLS AND EQUIPMENT

No special tools are required to install this printer.

UNPACKING AND INSPECTION

Refer to the Matrix Printer Operator Installation and Reference Manual, publication number 15051290, in the printer shipping carton.

SIGNAL CABLING AND SWITCH SETTINGS

NOTE

The CK130 matrix printer will unconditionally operate at 300 baud. Rates in excess of 300 baud may result in lost data in the application and will result in lost data when the ODS diagnostics are run. This is because the buffer busy and X-on/X-off protocols of the printer are not supported by CYBER 18 equipment (buffer busy is not supported by the CLA and X-on/X-off is not supported by standard CYBER 18 operating systems).

EIGHT-CHANNEL COMMUNICATION LINE ADAPTER

The matrix printer interfaces with the eight-channel CLA within the processor cabinet. Install the printer signal cable according to the procedures given in section 19 of this manual.

Refer to table 33-1 and set the option switches at the rear of the printer. Do this with the power off. When power to the printer is restored, the switch settings will take effect. Inform site personnel of the parameters such as the baud rate, bits/character, number of stop bits, and parity so their software installation/configuration can be updated accordingly.

KEYBOARD DISPLAY TERMINAL SLAVE PERIPHERAL

Connect the signal cable from the printer connector of the CC628 device to the printer rear-panel connector. Set the option switches of the rear of the printer per table 33-1. Do this with the power off. When the power to the printer is restored, the switch settings will take effect. Set the switches on the CC628 device to the equivalent settings (see sections 2 and 6 of this manual).

DIAGNOSTIC TESTING

Verify proper operation of the printer with its built-in test print capability. To do this, press the printer HOLD switch to the down position. Simultaneously press the printer STEP and FORM switches until printing starts, then release the two switches. To stop the test printout, release the printer HOLD switch to the up position.

DIRECT CONNECTION TO COMMUNICATION LINE ADAPTER

Load and run the ODS CLAMP test per the instructions in the ODS manual. Verify the printout for the proper characters and format. Shifted or missing lines are the symptom of lost data. This will occur at rates greater than 300 baud.

CONNECTION TO COMMUNICATION LINE ADAPTER VIA DISPLAY TERMINAL

Load and run the ODS CLACD test per the instructions in the ODS reference manual. Verify that the printed data is the same as what is displayed on the screen and what the test expected to output. Shifted or missing lines are the symptom of lost data, which will occur at rates greater than 300 baud.

CONNECTION TO OPERATOR'S CONSOLE

Load and run the ODS LIAT1 test minus section 2 (section 2, the 752 command test, causes excess paper to be ejected through the printer if run). Instructions for running the LIAT1 test are in the ODS reference manual. Verify that the printed data is the same as what is displayed on the screen and what the test expected to output. Shifted or missing lines are the symptom of lost data, which will occur at rates greater than 300 baud.

TABLE 33-1. PRINTED SWITCH SETTINGS

SWITCH	SETTING	FUNCTION (SELECTED FUNCTION IS UNDERLINED)
A-1	OFF	Signal ground to frame ground, connected/disconnect
A-2	OFF	Receive Data on printer pin 2, enable/disable
A-3	ON	Receive Data on printer pin 3, enable/disable
A-4	OFF	X-on/X-off protocol, enable/disable
A-5	OFF	Simulated Request To Send, enable/disable
A-6	ON	Simulated Data Terminal Ready, enable/disable
A-7	OFF	X-on/X-off transmitted on pin 2, enable/disable
A-8	OFF	X-on/X-off transmitted on pin 3, enable/disable
A-9	OFF	Parity bit enable, enable/disable
A-10	OFF	Parity odd or even
B-1	OFF	9600 baud select
B-2	OFF	4800 baud select
B-3	OFF	2400 baud select
B-4	OFF	1200 baud select
B-5	ON	300 baud select
B-6	OFF	110 baud select
B-7	OFF	1 or 2 stop bits
B-8	OFF	7 or 8 data bits per character
C-1	ON	Printer Busy from pin 11 of printer, enable/disable
C-2	OFF	Printer Busy from pin 19 of printer, enable/disable
C-3	OFF	Printer Busy from pin 4 of printer, enable/disable
C-4	OFF	Printer Busy from pin 20 of printer, enable/disable
C-5	OFF	Printer Busy/Character Busy (-), enable/disable
C-6	OFF	Printer Busy/Character Busy (+), enable/disable
C-7	ON	Printer Busy/Buffer Busy (-), enable/disable
C-8	OFF	Printer Busy/Buffer Busy (+), enable/disable
C-9	OFF	Constant Secondary Request To Send on pin 19, enable/disable
C-10	OFF	Constant Secondary Request To Send on pin 11, enable/disable

Summary of parameter settings:

Baud = 300	Receive Data on printer pin 3
Stop bits = 2	Data Terminal Ready - constantly on
Data bits = 8	Request To Send - constantly on
Parity disabled	Buffer Busy - enabled for paper-out indications only
	Character Busy - disabled
	X-on/X-off - disabled

MANUAL TITLE: CDC CYBER 18 Computer Systems With MOS Memory
Installation Manual

PUBLICATION NO.: 96768360 REVISION: BD

NAME: _____

COMPANY: _____

STREET ADDRESS: _____

CITY: _____ STATE: _____ ZIP CODE: _____

This form is not intended to be used as an order blank. Control Data Corporation welcomes your evaluation of this manual. Please indicate any errors, suggested additions or deletions, or general comments below (please include page number references).

NO POSTAGE STAMP NECESSARY IF MAILED IN U.S.A.

STAPLE

STAPLE

FOLD

FOLD

NO POSTAGE
NECESSARY
IF MAILED
IN THE
UNITED STATES

BUSINESS REPLY MAIL

FIRST CLASS PERMIT NO. 8241 MINNEAPOLIS, MINN.

POSTAGE WILL BE PAID BY

CONTROL DATA CORPORATION

Technical Publications Department
2401 North Fairview Avenue
St. Paul, Minnesota 55113

CUT ALONG LINE

FOLD

FOLD

03377

CORPORATE HEADQUARTERS, P.O. BOX 0, MINNEAPOLIS, MINN. 55440
SALES OFFICES AND SERVICE CENTERS IN MAJOR CITIES THROUGHOUT THE WORLD

LITHO IN U.S.A.



CONTROL DATA CORPORATION